Electrical Sector Solutions

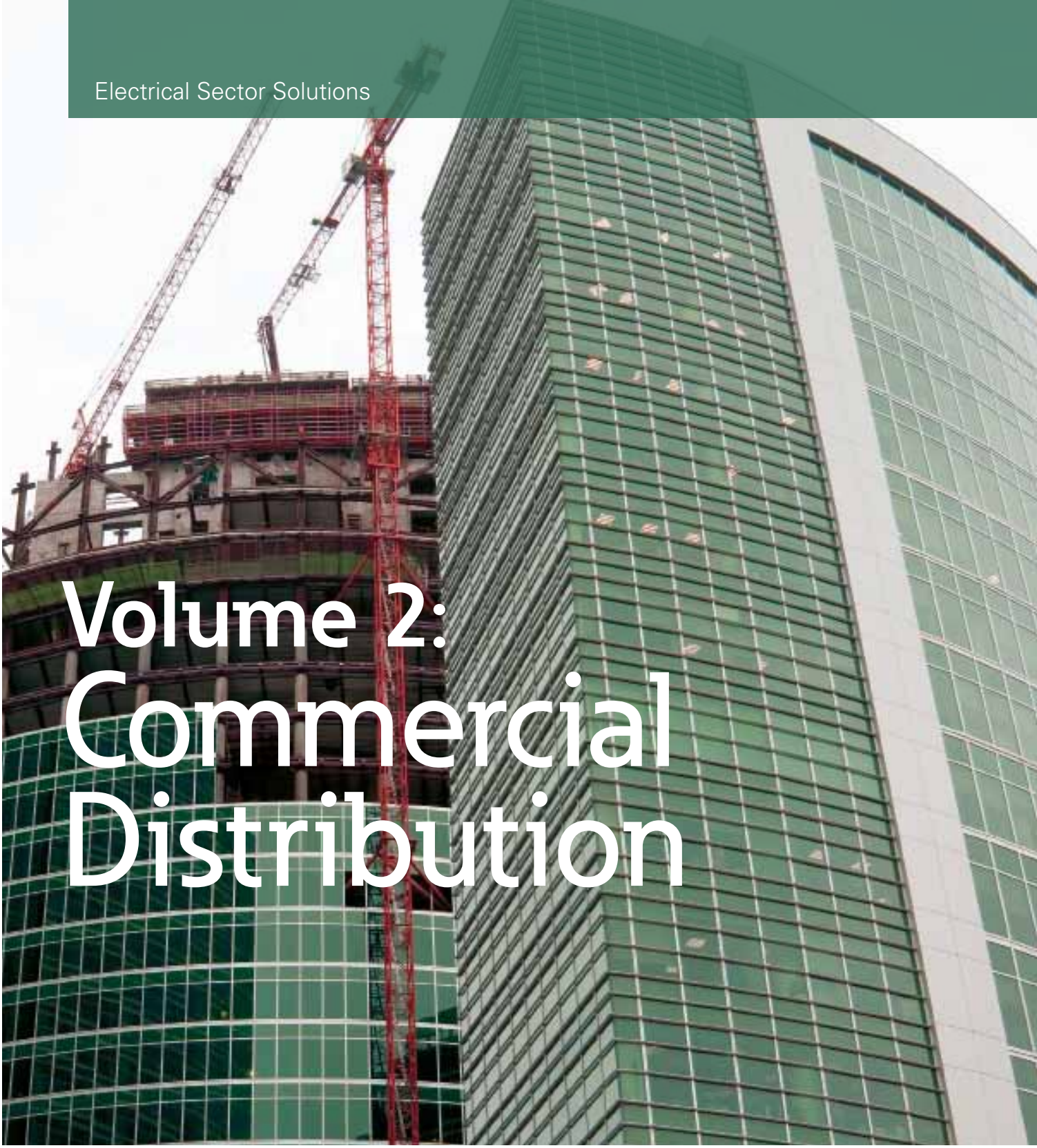

Volume 2: Commercial Distribution

EATON

Powering Business Worldwide

Tab 1—Switching Devices V2-T1-1
Tab 2—Transformers V2-T2-1
Tab 3—Panelboards and Lighting Control V2-T3-1
Tab 4—Switchboards V2-T4-1
Tab 5—Transfer Switches V2-T5-1
Tab 6—Low Voltage Busway V2-T6-1
Appendix 1—Eaton Terms & Conditions V2-A1-1
Appendix 2—Catalog Parent Number Index V2-A2-1
Appendix 3—Alphabetical Product Index V2-A3-1

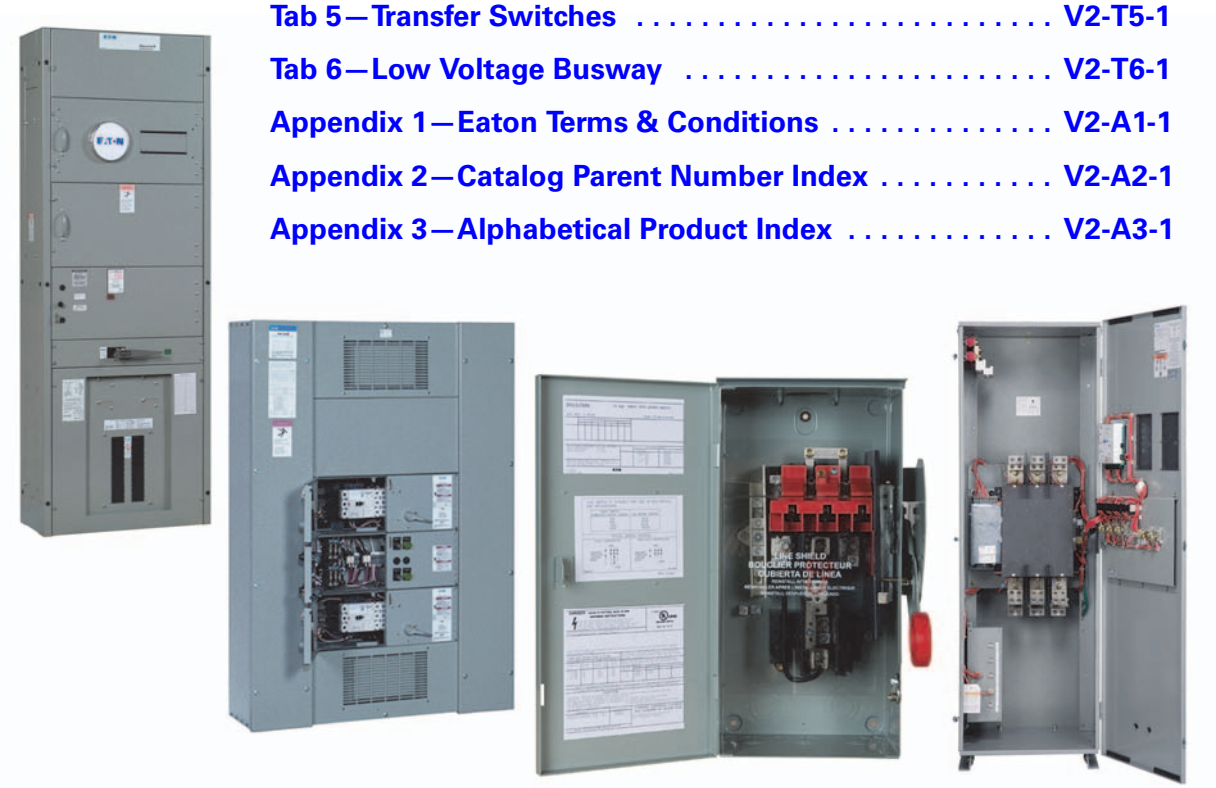

Copyright

Dimensions, Weights and Ratings

Dimensions, weights and ratings given in this catalog **are approximate and should not be used for construction purposes**. Drawings containing exact dimensions are available upon request. All listed product specifications and ratings are subject to change without notice. Photographs are representative of production units.

Terms and Conditions

All prices and discounts are subject to change without notice. When price changes occur, they are published in Eaton's *Price and Availability Digest* (PAD). All orders accepted by Eaton's Electrical Sector are subject to the general terms and conditions as set forth in Appendix 1—Eaton Terms & Conditions.

Technical and Descriptive Publications

This catalog contains brief technical data for proper selection of products. Further information is available in the form of technical information publications and illustrated brochures. If additional product information is required, contact your local Eaton Products Distributor, call **1-800-525-2000** or visit our website at **www.eaton.com**.

Compliance with Nuclear Regulation 10 CFR 21

Eaton products are sold as commercial grade products not intended for application in facilities or activities licensed by the United States Nuclear Regulatory Commission for atomic purposes, under 10 CFR 21. Further certification will be required for use of these products in a safety-related application in any nuclear facility licensed by the U.S. Nuclear Regulatory Commission.

WARNING

The installation and use of Eaton products should be in accordance with the provisions of the U.S. National Electrical Code® and/or other local codes or industry standards that are pertinent to the particular end use. Installation or use not in accordance with these codes and standards could be hazardous to personnel and/or equipment.

These catalog pages do not purport to cover all details or variations in equipment, nor to provide for every possible contingency to be met in connection with installation, operation or maintenance. Should further information be desired or should particular problems arise which are not covered sufficiently for the purchaser's purposes, the matter should be referred to the local Eaton Products Distributor or Sales Office. The contents of this catalog shall not become part of or modify any prior or existing agreement, commitment or relationship. The sales contract contains the entire obligation of Eaton's Electrical Sector. The warranty contained in the contract between the parties is the sole warranty of Eaton. Any statements contained herein do not create new warranties or modify the existing warranty.

Copyright ©2016 Eaton, All Rights Reserved.

Powering Business Worldwide

Eaton is a global leader in power distribution, power quality, control and automation, and monitoring products.

At Eaton, we believe a reliable, efficient and safe power system is the foundation of every successful enterprise. Through innovative technologies, cutting-edge products and our highly skilled services team, we empower businesses around the world to achieve a powerful advantage.

In addition, Eaton is committed to creating and maintaining powerful customer relationships built on a foundation of excellence. From the products we manufacture to our dedicated customer service and support, we know what's important to you.

Solutions

Eaton takes the complexity out of power systems management with a holistic and strategic approach, leveraging our industry-leading technology, solutions and services. We focus on the following three areas in all we do:

- Reliability—maintain the appropriate level of power continuity without disruption or unexpected downtime
- Efficiency—minimize energy usage, operating costs, equipment footprint and environmental impact
- Safety—identify and mitigate electrical hazards to protect what you value most

Using the Eaton Catalog Library

As we grow, it becomes increasingly difficult to include all products in one or two comprehensive catalogs. Knowing that each user has their specific needs, we have created a library of catalogs for our products that when complete, will contain 15 volumes. Since the volumes will continuously be a work in progress and updated, each volume will stand alone. Refer to our volume directory, MZ08100001E, for a quick glance of where to look for the products you need. The 15 volumes include:

- Volume 1—Residential and Light Commercial (CA08100002E)
- Volume 2—Commercial Distribution (CA08100003E)
- Volume 3—Power Distribution and Control Assemblies (CA08100004E)
- Volume 4—Circuit Protection (CA08100005E)
- Volume 5—Motor Control and Protection (CA08100006E)
- Volume 6—Solid-State Motor Control (CA08100007E)
- Volume 7—Logic Control, Operator Interface and Connectivity Solutions (CA08100008E)
- Volume 8—Sensing Solutions (CA08100010E)
- Volume 9—Original Equipment Manufacturer (CA08100011E)
- Volume 10—Enclosed Control (CA08100012E)
- Volume 11—Vehicle and Commercial Controls (CA08100013E)
- Volume 12—Aftermarket, Renewal Parts and Life Extension Solutions (CA08100014E)
- Volume 13—Counters, Timers and Tachometers (CA08100015E)—Available in electronic format only
- Volume 14—Fuses (CA08100016E)—Available in electronic format only
- Volume 15—Solar Inverters and Electrical Balance of System (CA08100018E)

These volumes are not all-inclusive of every product, but they are meant to be an overview of our product lines. For our full range of product solutions and additional product information, consult Eaton.com/electrical and other catalogs and product guides in our literature library. These references include:

- The Consulting Application Guide (CA08104001E)
- The Eaton Power Quality Product Guide (COR01FYA)

If you don't have the volume that contains the product or information that you are looking for, not to worry. You can access every volume of the catalog library at Eaton.com/electrical in the Literature Library.

By installing our Automatic Tab Updater (ATU), you can be sure you always have the most recent version of each volume and tab.

Icons

Green Leaf

Eaton Green Solutions are products, systems or solutions that represent Eaton benchmarks for environmental performance. The green leaf symbol is our promise that the solution has been reviewed and documented as offering exceptional, industry-leading environmental benefits to customers, consumers and our communities. Though all of Eaton's products and solutions are designed to meet or exceed applicable government standards related to protecting the environment, our products with the Green Leaf designation further provide "exceptional environmental benefit."

Learn Online

When you see the Learn Online icon, go to Eaton.com/electrical and search for the product or training page. There you will find 100-level training courses, podcasts, webcasts or games and puzzles to learn more.

Drawings Online

When you see the Drawings Online icon, go to Eaton.com/electrical and find the products page. There you will find a tab that includes helpful product drawings and illustrations.

Contact Us

If you need additional help, you can find contact information under the Customer Care heading of Eaton.com/electrical.

DH362NRK Safety Switch

1.1 Safety Switches

Product Overview V2-T1-3
Cross-Reference V2-T1-5
Catalog Number Selection V2-T1-13
Options and Accessories V2-T1-14
Modifications—Flex Center V2-T1-16
Standard Lug Capacities V2-T1-20
General Duty V2-T1-26
Heavy-Duty V2-T1-31
Six-Pole Switches V2-T1-43
Double-Throw Switches V2-T1-45
EnviroLine—Stainless Steel Switch V2-T1-53
EnviroLine—Upper and Lower Window Switches V2-T1-56
EnviroLine—Receptacle Switches V2-T1-59
EnviroLine—Non-Metallic KRYDON Switch V2-T1-61
Shunt Trip Safety SwitchShunt Trip Safety Switch V2-T1-63
NEMA 7/9—Hazardous Location Disconnect Switch V2-T1-66
Quick Connect Switches V2-T1-68
Solar Disconnect Switch V2-T1-70
316-Grade Stainless Steel Safety Switches V2-T1-72
Mill-Duty Rated, Heavy-Duty, Fusible, Non-Fusible, Single-Throw . . . V2-T1-76
Heavy-Duty Fusible Safety Switches Accepting Cube Fuses V2-T1-78
Elevator Control Switch V2-T1-81
Auxiliary Power Heavy-Duty Safety Switch V2-T1-83
Left-Handed Safety Switch V2-T1-86
200% Neutral Safety Switches V2-T1-87
Pringle Bolted Pressure Switch V2-T1-88
Type DS, Fusible and Non-Fusible V2-T1-91
Type Visi-Flex DE-ION V2-T1-94
Flange Mounted—Variable Depth V2-T1-98
Flange Mounted—Fixed Depth V2-T1-102

1.2 Enclosed Circuit Breakers

Product Description V2-T1-104
Application Description V2-T1-104
Features, Benefits and Functions V2-T1-105
Standards and Certifications V2-T1-105
Cross-Reference V2-T1-106
Product Selection V2-T1-108
Accessories V2-T1-110
Flex Center V2-T1-112
Technical Data and Specifications V2-T1-113
Dimensions V2-T1-115

1.3 Enclosed Rotary Disconnects

Product Overview V2-T1-122
Product Selection V2-T1-123
Dimensions V2-T1-124

Learn Online

1

General-Duty Safety Switch

Contents

Description	*Page*
Product Overview	
Product Selection Guide	**V2-T1-3**
Standards and Certifications	**V2-T1-4**
Cross-Reference	**V2-T1-5**
Catalog Number Selection	**V2-T1-13**
Options and Accessories	**V2-T1-14**
Modifications—Flex Center	**V2-T1-16**
Technical Data and Specifications	**V2-T1-20**
Dimensions	**V2-T1-24**
General Duty	**V2-T1-26**
Heavy-Duty	**V2-T1-31**
Six-Pole Switches	**V2-T1-43**
Double-Throw Switches	**V2-T1-45**
EnviroLine—Stainless Steel Switch	**V2-T1-53**
EnviroLine—Upper and Lower Window Switches	**V2-T1-56**
EnviroLine—Receptacle Switches	**V2-T1-59**
EnviroLine—Non-Metallic KRYDON Switch	**V2-T1-61**
Shunt Trip Safety SwitchShunt Trip Safety Switch	**V2-T1-63**
NEMA 7/9—Hazardous Location Disconnect Switch	**V2-T1-66**
Quick Connect Switches	**V2-T1-68**
Solar Disconnect Switch	**V2-T1-70**
316-Grade Stainless Steel Safety Switches	**V2-T1-72**
Mill-Duty Rated, Heavy-Duty, Fusible, Non-Fusible, Single-Throw	**V2-T1-76**
Heavy-Duty Fusible Safety Switches Accepting Cube Fuses	**V2-T1-78**
Elevator Control Switch	**V2-T1-81**
Auxiliary Power Heavy-Duty Safety Switch	**V2-T1-83**
Left-Handed Safety Switch	**V2-T1-86**
200% Neutral Safety Switches	**V2-T1-87**
Pringle Bolted Pressure Switch	**V2-T1-88**
Type DS, Fusible and Non-Fusible	**V2-T1-91**
Type Visi-Flex DE-ION	**V2-T1-94**
Flange Mounted—Variable Depth	**V2-T1-98**
Flange Mounted—Fixed Depth	**V2-T1-102**

Product Overview

Product Selection Guide

Safety Switch

Description	General-Duty	Heavy-Duty	Six-Pole Motor Circuit	Double-Throw	Enclosed Rotary Switches
Type	Single-throw maximum 240 Vac horsepower rated	Single-throw maximum 600V AC/DC horsepower rated	Single-throw maximum 600 Vac	Maximum 600 Vac horsepower rated	Maximum 600 Vac
Fuse type Fusible	Plug Cartridge	Cartridge	Cartridge	Cartridge	—
Fuse class Fusible	①	①	①	①	①
Ampere rating Fusible	30–600	30–1200	30–200	30–1200	—
Non-fusible	30–600	30–1200	30–200	30–1200	16–125
Number of poles Fusible	1, 2 and 3 2 and 3	2, 3 and 4	6	2 and 3	—
Non-fusible	2 and 3	2, 3, 4 and 6	6	2, 3, 4 and 6	3 and 4
Enclosure types NEMA® 1 Fusible	Yes	Yes	—	Yes	Yes
Non-fusible	Yes	Yes	—	Yes	Yes
NEMA 3R Fusible	Yes	Yes	—	Yes	Yes
Non-fusible	Yes	Yes	Yes	Yes	Yes ②
NEMA 12 Fusible	—	Yes ②	Yes, up to 200A ②	Yes	Yes
Non-fusible	—	Yes, up to 1200A ②	Yes ②	Yes, up to 400A	Yes ②
NEMA 4 painted steel Fusible	—	Yes, 400–800A	—	—	—
Non-fusible	—	Yes, 400–800A	—	—	—
NEMA 4X stainless steel Fusible	—	Yes	Yes, up to 200A	Yes	Yes
Non-fusible	—	Yes, up to 1200A	Yes	Yes, up to 400A	Yes
NEMA 4X non-metallic Fusible	—	Yes, up to 200A	—	—	Yes
Non-fusible	—	Yes, up to 200A	—	—	Yes
NEMA 7/9 Fusible	—	Yes, up to 100A	—	—	—
Non-fusible	—	Yes, up to 100A ③	—	—	—

Notes

① See specific catalog number page for Fuse Class details. Enclosed rotary switches are non-fusible only.
② NEMA Type 12 enclosures (30–800A) can be field modified to meet NEMA 3R rainproof requirements when a factory provided drain screw is removed.
③ Class J fuse clips provided.

Product Description

- Used to open or close a circuit
- Non-fusible safety switches provide a means to manually connect or disconnect the load from the source
- Fusible safety switches provide a means to manually open and close a circuit and overcurrent protection by means of installed fuses
- Also commonly referred to as a disconnect switch or disconnect
- Available from 30 to 1200A

Standards and Certifications

- UL® 98
- UL 50
- NEMA KS-1

Cross-Reference

General-Duty

Ampere Rating	Catalog Number Eaton	General Electric	Siemens	Square D
Plug Fuse, Single-Pole, Two-Wire, 120 Vac, NEMA 1				
30	**DP111NGB**	TPF130	LF111N	D211N
Plug Fuse, Two-Pole, Three-Wire, 240 Vac, NEMA 1				
30	**DP221NGB**	TPF230	LF211N	D211N
Fusible, Two-Pole, Three-Wire, 240 Vac, NEMA 1				
30	**DG221NGB**	TG3221	GF221N	D221N
60	**DG222NGB**	TG3222	GF222N	D222N
100	**DG223NGB**	TG3223	GF223N	D223N
200	**DG224NGK**	TG3224	GF224N	D224N
400	**DG225NGK**	TG3225	GF225N	D225N
600	**DG226NGK**	TG3226	GF226N	D226N
Fusible, Three-Pole, Three-Wire, 240 Vac, NEMA 1				
30	**DG321NGB**	TG4321	GF321N	D321N
60	**DG322NGB**	TG4322	GF322N	D322N
100	**DG323NGB**	TG4323	GF323N	D323N
200	**DG324NGK**	TG4324	GF324N	D324N
400	**DG325FGK**	TG3325	GF325N	D325N
600	**DG326FGK**	TG3326	GF326N	D326N
Fusible, Three-Pole, Four-Wire, 240 Vac, NEMA 1				
30	**DG321NGB**	TG4321	GF321N	D321N
60	**DG322NGB**	TG4322	GF322N	D322N
100	**DG323NGB**	TG4323	GF323N	D323N
200	**DG324NGK**	TG4324	GF324N	D324N
400	**DG325NGK**	TG4325	GF325N	D325N
600	**DG326NGK**	TG4326	GF326N	D326N
Non-Fusible, Two-Pole, Two-Wire, 240 Vac, NEMA 1				
30	**DG221UGB**	TGN3321	N/A	N/A
60	**DG222UGB**	TGN3322	N/A	QO260NATS
100	**DG223UGB**	TGN3323	N/A	QO2000NS
200	**DG324UGK**	TGN3324	N/A	DU324
400	**DG325UGK**	TGN3325	N/A	DU325
600	**DG326UGK**	TGN3326	N/A	DU326
Non-Fusible, Three-Pole, Three-Wire, 240 Vac, NEMA 1				
30	**DG321UGB**	TGN3321	GNF321	DU321
60	**DG322UGB**	TGN3322	GNF322	DU322
100	**DG323UGB**	TGN3323	GNF323	DU323
200	**DG324UGK**	TGN3324	GNF324	DU324
400	**DG325UGK**	TGN3325	GNF325	DU325
600	**DG326UGK**	TGN3326	GNF326	DU326

General-Duty, continued

Ampere Rating	Catalog Number Eaton	General Electric	Siemens	Square D
Fusible, Two-Pole, Three-Wire, 240 Vac, NEMA 3R				
30	**DG221NRB**	TG3221R	GF221NR	D221NRB
60	**DG222NRB**	TG3222R	GF222NR	D222NRB
100	**DG223NRB**	TG3223R	GF223NR	D223NRB
200	**DG224NRK**	TG3224R	GF224NR	D224NRB
400	**DG225NRK**	TG3225R	GF225NR	D225NR
600	**DG226NRK**	TG3226R	GF226NR	D226NR
Fusible, Three-Pole, Three-Wire, 240 Vac, NEMA 3R				
30	**DG321NRB**	TG4321R	GF321NR	D321NRB
60	**DG322NRB**	TG4322R	GF322NR	D322NRB
100	**DG323NRB**	TG4323R	GF323NR	D323NRB
200	**DG324NRK**	TG4324R	GF324NR	D324NRB
400	**DG325FRK**	TG3325R	GF325NR	D325NR
600	**DG326FRK**	TG3326R	GF326NR	D326NR
Fusible, Three-Pole, Four-Wire, 240 Vac, NEMA 3R				
30	**DG321NRB**	TG4321R	GF321NR	D321NRB
60	**DG322NRB**	TG4322R	GF322NR	D322NRB
100	**DG323NRB**	TG4323R	GF323NR	D323NRB
200	**DG324NRK**	TG4324R	GF324NR	D324NRB
400	**DG325NRK**	TG3325R ①	GF325NR	D325NR
600	**DG326NRK**	TG3326R ①	GF326NR	D326NR
Non-Fusible, Two-Pole, Two-Wire, 240 Vac, NEMA 3R				
30	**DG221URB**	TGN3321R	GNF321R	DU221RB
60	**DG222URB**	TGN3322R	GNF322R	DU222RB
100	**DG223URB**	TGN3323R	GNF323R	QO2000NRB
200	**DG324URK**	TGN3324R	GNF324R	DU324RB
Non-Fusible, Three-Pole, Three-Wire, 240 Vac, NEMA 3R				
30	**DG321URB**	TGN3321R	GNF321R	DU321RB
60	**DG322URB**	TGN3322R	GNF322R	DU322RB
100	**DG323URB**	TGN3323R	GNF323R	DU323RB
200	**DG324URK**	TGN3324R	GNF324R	DU324RB
400	**DG325URK**	N/A	N/A	N/A
600	**DG326URK**	N/A	N/A	N/A

Notes

① Separate neutral kit required.

Always verify the number of poles and wires required since catalog numbers may appear in multiple tables.

Heavy-Duty

Ampere Rating	Catalog Number Eaton	General Electric	Siemens	Square D
Fusible, Two-Pole, Two-Wire, 240 Vac, NEMA 1				
30	**DH221FGK**	TH3221	N/A	H221N
60	**DH222NGK**	TH3222	N/A	H222N
100	**DH223NGK**	TH3223	N/A	H223N
200	**DH224NGK**	TH3224	N/A	H224N
400	**DH225FGK**	TH3225	N/A	H225
600	**DH226FGK**	TH3226	N/A	H226
800	**DH227FGK**	TC72267	N/A	H227
1200	**DH328FGK**	TC72268	N/A	H228
Fusible, Two-Pole, Three-Wire, 240 Vac, NEMA 1				
30	**DH221NGK**	TH3221	HF221N	H221N
60	**DH222NGK**	TH3222	HF222N	H222N
100	**DH223NGK**	TH3223	HF223N	H223N
200	**DH224NGK**	TH3224	HF224N	H224N
400	**DH225NGK**	TH3225	HF225N	H225N
600	**DH226NGK**	TH3226	HF226N	H226N
800	**DH227NGK**	TC72267 ①	HF227N	H227N
1200	**DH328NGK**	TC72268 ①	HF228N	H228N
Fusible, Three-Pole, Three-Wire, 240 Vac, NEMA 1				
30	**DH321FGK**	TH4321	N/A	H321N
60	**DH322FGK**	TH4322	N/A	H322N
100	**DH323FGK**	TH4323	N/A	H323N
200	**DH324FGK**	TH4324	N/A	H324N
400	**DH325FGK**	TH3325	N/A	H325
600	**DH326FGK**	TH3326	N/A	H326
800	**DH327FGK**	TC72367	N/A	H327
1200	**DH328FGK**	TC72368	N/A	H328
Fusible, Three-Pole, Four-Wire, 240 Vac, NEMA 1				
30	**DH321NGK**	TH4321	HF321N	H321N
60	**DH322NGK**	TH4322	HF322N	H322N
100	**DH323NGK**	TH4323	HF323N	H323N
200	**DH324NGK**	TH4324	HF324N	H324N
400	**DH325NGK**	TH4325	HF325N	H325N
600	**DH326NGK**	TH4326	HF326N	H326N
800	**DH327NGK**	TC72367 ①	HF327N	H327N
1200	**DH328NGK**	TC72368 ①	HF328N	H328N
Fusible, Four-Pole, Four-Wire, 240 Vac, NEMA 1				
30	**DH421FGK**	N/A	F421	H461 ②
60	**DH422FGK**	N/A	F422	H462 ②
100	**DH423FGK**	N/A	F423	H463 ②
200	**DH424FGK**	N/A	F424	H464 ②
400	**DH425FGK**	N/A	F425	H465 ②
600	**DH426FGK**	N/A	F426	H466 ②

Heavy-Duty, continued

Ampere Rating	Catalog Number Eaton	General Electric	Siemens	Square D
Non-Fusible, Three-Pole, Three-Wire, 240 Volt/600 Vac, NEMA 1				
30	**DH361UGK**	THN3361	HNF361	HU361
60	**DH362UGK**	THN3362	HNF362	HU362
100	**DH363UGK**	THN3363	HNF363	HU363
200	**DH364UGK**	THN3364	HNF364	HU364
400	**DH365UGK**	THN3365	HNF365	HU365
600	**DH366UGK**	THN3366	HNF366	HU366
800	**DH367UGK**	TC36367	HNF367	HU367
1200	**DH368UGK**	TC36368	HNF368	HU368
Fusible, Three-Pole, Two-Wire, 240 Vac, NEMA 3R				
30	**DH221NRK**	TH3221R	N/A	H221NRB
60	**DH222NRK**	TH3222R	N/A	H222NRB
100	**DH223NRK**	TH3223R	N/A	H223NRB
200	**DH224NRK**	TH3224R	N/A	H224NRB
400	**DH225FRK**	TH3225R	N/A	H225R
600	**DH226FRK**	TH3226R	N/A	H226R
800	**DH227NRK**	TC72267R	N/A	H227R
1200	**DH328FRK**	TC72268R	N/A	H228R
Fusible, Two-Pole, Three-Wire, 240 Vac, NEMA 3R				
30	**DH221NRK**	TH3221R	HF221NR	H221NRB
60	**DH222NRK**	TH3222R	HF222NR	H222NRB
100	**DH223NRK**	TH3223R	HF223NR	H223NRB
200	**DH224NRK**	TH3224R	HF224NR	H224NRB
400	**DH225NRK**	TH3225R	HF225NR	H225NR
600	**DH226NRK**	TH3226R	HF226NR	H226NR
800	**DH227NRK**	TC72267R ①	HF227NR	H227NR
1200	**DH328NRK**	TC72268R ①	HF228NR	H228NR
Fusible, Three-Pole, Three-Wire, 240 Vac, NEMA 3R				
30	**DH321FRK**	TH4321R	N/A	H321NRB
60	**DH322FRK**	TH4322R	N/A	H322NRB
100	**DH323FRK**	TH4323R	N/A	H323NRB
200	**DH324FRK**	TH4324R	N/A	H324NRB
400	**DH325FRK**	TH3325R	N/A	H325NR
600	**DH326FRK**	TH3326R	N/A	H326NR
800	**DH327FRK**	TC72367R	N/A	H327NR
1200	**DH328FRK**	TC72368R	N/A	H328NR

Notes

① Separate neutral kit required.

② 600V switch.

Always verify the number of poles and wires required since catalog numbers may appear in multiple tables.

Heavy-Duty, continued

Ampere Rating	Catalog Number Eaton	General Electric	Siemens	Square D
Fusible, Three-Pole, Four-Wire, 240 Vac, NEMA 3R				
30	**DH321NRK**	TH4321R	HF321NR	H321NRB
60	**DH322NRK**	TH4322R	HF322NR	H322NRB
100	**DH323NRK**	TH4323R	HF323NR	H323NRB
200	**DH324NRK**	TH4324R	HF324NR	H324NRB
400	**DH325NRK**	TH3325R ①	HF325NR	H325R
600	**DH326NRK**	TH3326R ①	HF326NR	H326R
800	**DH327NRK**	TC72367R ①	HF327NR	H327R
1200	**DH328NRK**	TC72368R ①	HF328NR	H328R
Non-Fusible, Three-Pole, Three-Wire, 240 Volt/600 Vac, NEMA 3R				
30	**DH361URK**	THN3361R	HNF361R	HU361RB
60	**DH362URK**	THN3362R	HNF362R	HU362RB
100	**DH363URK**	THN3363R	HNF363R	HU363RB
200	**DH364URK**	THN3364R	HNF364R	HU364RB
400	**DH365URK**	THN3365R	HNF365R	HU365R
600	**DH366URK**	THN3366R	HNF366R	HU366R
800	**DH367URK**	N/A	HNF367R	HU367R
1200	**DH368URK**	N/A	HNF368R	HU368R
Fusible, Two-Pole, Two-Wire, 240 Vac, NEMA 4/4X				
30	**DH221NWK**	TH2221SS	HF221S	H221DS
60	**DH222NWK**	TH2222SS	HF222S	H222DS
100	**DH223NWK**	TH3223SS	HF223S	H223DS
200	**DH224NWK**	TH3224SS	HF224S	H224DS
400	**DH225FWK**	TH3225SS	HF325S	H225DS
600	**DH226FWK**	TH3226SS	HF326S	H226DS
Fusible, Two-Pole, Three-Wire, 240 Vac, NEMA 4/4X				
30	**DH221NWK**	TH3221SS	HF321S ①	H221DS ①
60	**DH222NWK**	TH3222SS	HF322S ①	H222DS ①
100	**DH223NWK**	TH3223SS	HF323S ①	H223DS ①
200	**DH224NWK**	TH3224SS	HF324S ①	H224DS ①
400	**DH225NWK**	TH3225SS	HF325S ①	H225NDS
600	**DH226NWK**	TH3226SS	HF326S ①	H226NDS
800	**DH227NWK**	N/A	HF327S ①	N/A
Fusible, Three-Pole, Three-Wire, 240 Vac, NEMA 4/4X				
30	**DH321FWK**	TH3321SS	HF321S	H321DS
60	**DH322FWK**	TH3322SS	HF322S	H322DS
100	**DH323NWK**	TH4323SS	HF323S	H323DS
200	**DH324NWK**	TH4324SS	HF324S	H324DS
400	**DH325FWK**	TH4325SS	HF325S	H325DS
600	**DH326FWK**	TH4326SS	HF326S	H326DS
800	**DH327FWK**	N/A	HF327S	N/A
Fusible, Three-Pole, Four-Wire, 240 Vac, NEMA 4/4X				
30	**DH321NWK**	TH4321SS	HF321S ①	H321DS ①
60	**DH322NWK**	TH4322SS	HF322S ①	H322DS ①
100	**DH323NWK**	TH4323SS	HF323S ①	H323DS ①
200	**DH324NWK**	TH4324SS	HF324S ①	H324DS ①
400	**DH325NWK**	TH4325SS	HF325S ①	H325NDS
600	**DH326NWK**	TH4326SS	HF326S ①	H326NDS

Heavy-Duty, continued

Ampere Rating	Catalog Number Eaton	General Electric	Siemens	Square D
Fusible, Two-Pole, Two-Wire, 240 Vac, NEMA 12				
30	**DH221NDK**	TH2221J	HF221J	H221AWK
60	**DH222NDK**	TH2222J	HF222J	H222AWK
100	**DH223NDK**	TH3223J	HF223J	H223AWK
200	**DH224NDK**	TH3224J	HF224J	H224AWK
400	**DH225FDK**	TH3225J	HF325J	H225AWK
600	**DH226FDK**	TH3226J	HF326J	H226AWK
800	**DH227FDK**	N/A	HF327J	H227AWK
1200	**N/A**	N/A	N/A	H228AWK
Fusible, Two-Pole, Three-Wire, 240 Vac, NEMA 12				
30	**DH221NDK**	TH3221J	HF221J ①	H221AWK
60	**DH222NDK**	TH3222J	HF222J ①	H222AWK
100	**DH223NDK**	TH3223J	HF223J ①	H223AWK
200	**DH224NDK**	TH3224J	HF224J ①	H224AWK
400	**DH225NDK**	TH3225J	HF325J ①	H225NAWK
600	**DH226NDK**	TH3226J	HF326J ①	H226NAWK
800	**DH227NDK**	N/A	HF327J ①	H227NAWK
1200	**N/A**	N/A	N/A	H228NAWK
Fusible, Three-Pole, Three-Wire, 240 Vac, NEMA 12				
30	**DH321FDK**	TH3321J	HF321J	H321AWK
60	**DH322FDK**	TH3322J	HF322J	H322AWK
100	**DH323FDK**	TH4323J	HF323J	H323AWK
200	**DH324FDK**	TH4324J	HF324J	H324AWK
400	**DH325FDK**	TH4325J	HF325J	H325AWK
600	**DH326FDK**	TH4326J	HF326J	H326AWK
800	**DH327FDK**	N/A	HF327J	H327AWK
1200	**N/A**	N/A	N/A	H328AWK
Fusible, Three-Pole, Four-Wire, 240 Vac, NEMA 12				
30	**DH321NDK**	TH4321J	HF321J ①	H321AWK ①
60	**DH322NDK**	TH4322J	HF322J ①	H322AWK ①
100	**DH323NDK**	TH4323J	HF323J ①	H323AWK ①
200	**DH324NDK**	TH4324J	HF324J ①	H324AWK ①
400	**DH325NDK**	TH4325J	HF325J ①	H325NAWK
600	**DH326NDK**	TH4326J	HF326J ①	H326NAWK
800	**N/A**	N/A	HF327J ①	H327NAWK
1200	**N/A**	N/A	N/A	H328NAWK
Fusible, Four-Pole, Four-Wire, 240 Vac, NEMA 12				
30	**DH421FDK**	N/A	N/A	N/A
60	**DH422FDK**	N/A	N/A	N/A
100	**DH423FDK**	N/A	N/A	N/A
200	**DH424FDK**	N/A	N/A	N/A

Notes

① Separate neutral kit required.

Always verify the number of poles and wires required since catalog numbers may appear in multiple tables.

Heavy-Duty, continued

Ampere Rating	Catalog Number Eaton	General Electric	Siemens	Square D
Fusible, Two-Pole, Two-Wire, 600 Vac, NEMA 1				
30	**DH261FGK**	TH2261DC	HF261	H361
60	**DH262FGK**	TH2262DC	HF262	H362
100	**DH263FGK**	TH2263DC	HF263	H363
200	**DH264FGK**	N/A	N/A	H364
400	**DH265FGK**	N/A	HF265	H265
600	**DH266FGK**	N/A	HF266	H266
800	**DH267FGK**	N/A	N/A	H267
1200	**N/A**	N/A	N/A	H268
Fusible, Three-Pole, Three-Wire, 600 Vac, NEMA 1				
30	**DH361FGK**	TH3361	HF361	H361
60	**DH362FGK**	TH3362	HF362	H362
100	**DH363FGK**	TH3363	HF363	H363
200	**DH364FGK**	TH3364	HF364	H364
400	**DH365FGK**	TH3365	HF365	H365
600	**DH366FGK**	TH3366	HF366	H366
800	**DH367FGK**	TC72367	HF367	H367
1200	**DH368FGK**	TC72368	HF368	H368
Fusible, Three-Pole, Four-Wire, 600 Vac, NEMA 1				
30	**DH361NGK**	TH3361 ①	HF361N	H361N
60	**DH362NGK**	TH3362 ①	HF362N	H362N
100	**DH363NGK**	TH3363 ①	HF363N	H363N
200	**DH364NGK**	TH3364 ①	HF364N	H364N
400	**DH365NGK**	TH3365 ①	HF365N	H365N
600	**DH366NGK**	TH3366 ①	HF366N	H366N
800	**DH367NGK**	TC72367 ①	HF367N	H367N
1200	**DH368NGK**	TC72368 ①	HF368 ①	H368N
Fusible, Four-Pole, Four-Wire, 600 Vac, NEMA 1				
30	**DH461FGK**	TH6661	N/A	H461
60	**DH462FGK**	TH6662	N/A	H462
100	**DH463FGK**	TH6663	N/A	H463
200	**DH464FGK**	TH6664	N/A	H464
400	**DH465FGK**	N/A	N/A	H465
600	**DH466FGK**	N/A	N/A	H466
Non-Fusible, Two-Pole, Two-Wire, 600 Vac, NEMA 1				
30	**DH261UGK**	THN2261DC	HNF261	HU361
60	**DH362UGK**	THN2262DC	HNF262	HU362
100	**DH263UGK**	THN2263DC	HNF263	HU363
200	**DH364UGK**	N/A	N/A	HU364
400	**DH265UGK**	N/A	HNF265	HU265
600	**DH266UGK**	N/A	HNF266	HU266
800	**DH267UGK**	N/A	N/A	HU267
1200	**N/A**	N/A	N/A	HU268

Heavy-Duty, continued

Ampere Rating	Catalog Number Eaton	General Electric	Siemens	Square D
Non-Fusible, Four-Pole, Four-Wire, 600 Vac, NEMA 1				
30	**DH461UGK**	THN6661	N/A	HU461
60	**DH462UGK**	THN6662	N/A	HU462
100	**DH463UGK**	THN6663	N/A	HU463
200	**DH464UGK**	THN6664	N/A	HU464
400	**DH465UGK**	N/A	N/A	HU465
600	**DH466UGK**	N/A	N/A	HU466
Fusible, Two-Pole, Two-Wire, 600 Vac, NEMA 3R				
30	**DH361FRK**	TH2261RDC	HF261R	H361RB
60	**DH362FRK**	TH2262RDC	HF262R	H362RB
100	**DH363FRK**	TH2263RDC	HF263R	H363RB
200	**DH364FRK**	N/A	N/A	H364RB
400	**DH365FRK**	N/A	N/A	H265R
600	**DH366FRK**	N/A	HF265R	H266R
800	**DH367FRK**	N/A	HF266R	H267R
1200	**DH368FRK**	N/A	N/A	H268R
Fusible, Three-Pole, Three-Wire, 600 Vac, NEMA 3R				
30	**DH361FRK**	TH3361R	HF361R	H361RB
60	**DH362FRK**	TH3362R	HF362R	H362RB
100	**DH363FRK**	TH3363R	HF363R	H363RB
200	**DH364FRK**	TH3364R	HF364R	H364RB
400	**DH365FRK**	TH3365R	HF365R	H365R
600	**DH366FRK**	TH3366R	HF366R	H366R
800	**DH367FRK**	TC72367R	HF367R	H367R
1200	**DH368FRK**	TC72368R	HF368R	H368R
Fusible, Three-Pole, Four-Wire, 600 Vac, NEMA 3R				
30	**DH361NRK**	TH3361R ①	HF361NR	H361NRB
60	**DH362NRK**	TH3362R ①	HF362NR	H362NRB
100	**DH363NRK**	TH3363R ①	HF363NR	H363NRB
200	**DH364NRK**	TH3364R ①	HF364NR	H364NRB
400	**DH365NRK**	TH3365R ①	HF365NR	H365NR
600	**DH366NRK**	TH3366R ①	HF366NR	H366NR
800	**DH367NRK**	TC72367R ①	HF367NR	H367NR
1200	**DH368NRK**	TC72368R ①	HF368R	H368NR
Non-Fusible, Three-Pole, Three-Wire, 600 Vac, NEMA 3R				
30	**DH361URK**	THN2261RDC	HNF261R	HU361RB
60	**DH362URK**	THN2262RDC	HNF262R	HU362RB
100	**DH363URK**	THN2263RDC	HNF263R	HU363RB
200	**DH364URK**	N/A	N/A	HU364RB
400	**DH365URK**	N/A	HNF265R	HU265R
600	**DH366URK**	N/A	HNF266R	HU266R
800	**DH367URK**	N/A	N/A	HU267R
1200	**DH368URK**	N/A	N/A	HU268R

Notes

① Separate neutral kit required.

Always verify the number of poles and wires required since catalog numbers may appear in multiple tables.

Heavy-Duty, continued

Ampere Rating	Catalog Number Eaton	General Electric	Siemens	Square D
Non-Fusible, Four-Pole, Four-Wire, 600 Vac, NEMA 3R				
30	**DH461UDK**	THN6661	N/A	N/A
60	**DH462UDK**	THN6662	N/A	N/A
100	**DH463UDK**	THN6663	N/A	N/A
200	**DH464UDK**	THN6664	N/A	N/A
Fusible, Two-Pole, Two-Wire, 600 Vac, NEMA 4/4X Stainless Steel				
30	**DH261FWK**	TH2261SSDC	HF261S	H361DS
60	**DH362FWK**	TH2262SSDC	HF262S	H362DS
100	**DH363FWK**	TH2263SSDC	HF263S	H363DS
200	**DH264FWK**	N/A	N/A	H364DS
400	**DH365FWK**	N/A	HF265S	H265DS
600	**DH366FWK**	N/A	HF266S	H266DS
800	**DH367FWK**	N/A	N/A	N/A
Fusible, Three-Pole, Three-Wire, 600 Vac, NEMA 4/4X Stainless Steel				
30	**DH361FWK**	TH3361SS	HF361S	H361DS
60	**DH362FWK**	TH3362SS	HF362S	H362DS
100	**DH363FWK**	TH3363SS	HF363S	H363DS
200	**DH364FWK**	TH3364SS	HF364S	H364DS
400	**DH365FWK**	TH3365SS	HF365S	H365DS
600	**DH366FWK**	TH3366SS	HF366S	H366DS
800	**DH367FWK**	N/A	HF367S	N/A
Fusible, Three-Pole, Four-Wire, 600 Vac, NEMA 4/4X Stainless Steel				
30	**DH361NWK**	TH3361SS ①	HF361S ①	H361DS ①
60	**DH362NWK**	TH3362SS ①	HF362S ①	H362DS ①
100	**DH363NWK**	TH3363SS ①	HF363S ①	H363DS ①
200	**DH364NWK**	TH3364SS ①	HF364S ①	H364NDS
400	**DH365NWK**	TH3365SS ①	HF365S ①	H365NDS
600	**DH366NWK**	TH3366SS ①	HF366S ①	H366NDS
Non-Fusible, Two-Pole, Two-Wire, 600 Vac, NEMA 4/4X Stainless Steel				
30	**DH361UWK**	THN2261SSDC	HNF261S	HU361DS
60	**DH362UWK**	THN2262SSDC	HNF262S	HU362DS
100	**DH363UWK**	THN2263SSDC	HNF263S	HU363DS
200	**DH364UWK**	N/A	N/A	HU364DS
400	**DH365UWK**	N/A	HNF265S	HU265DS
600	**DH366UWK**	N/A	HNF266S	HU266DS
800	**DH367UWK**	N/A	N/A	N/A
Non-Fusible, Three-Pole, Three-Wire, 600 Vac, NEMA 4/4X Stainless Steel				
30	**DH361UWK**	THN3361SS	HNF361S	HU361DS
60	**DH362UWK**	THN3362SS	HNF362S	HU362DS
100	**DH363UWK**	THN3363SS	HNF363S	HU363DS
200	**DH364UWK**	THN3364SS	HNF364S	HU364DS
400	**DH365UWK**	THN3365SS	HNF365S	HU365DS
600	**DH366UWK**	THN3366SS	HNF366S	HU366DS
800	**DH367UWK**	N/A	HNF367S	N/A

Heavy-Duty, continued

Ampere Rating	Catalog Number Eaton	General Electric	Siemens	Square D
Non-Fusible, Four-Pole, Four-Wire, 600 Vac, NEMA 4/4X Stainless Steel				
30	**DH461UWK**	N/A	N/A	HU461DS
60	**N/A**	N/A	N/A	HU462DS
100	**N/A**	N/A	N/A	HU464DS
200	**N/A**	N/A	N/A	HU464DS
Fusible, Two-Pole, Two-Wire, 600 Vac, NEMA 12				
30	**DH261FDK**	TH2261JDC	HF261J	H361AWK
60	**DH262FDK**	TH2262JDC	HF262J	H362AWK
100	**DH263FDK**	TH2263JDC	HF263J	H363AWK
200	**DH264FDK**	N/A	N/A	H364AWK
400	**DH265FDK**	N/A	HF265J	H265AWK
600	**DH266FDK**	N/A	HF266J	H266AWK
800	**DH267FDK**	N/A	N/A	H267AWK
1200	**N/A**	N/A	N/A	H268AWK
Fusible, Three-Pole, Three-Wire, 600 Vac, NEMA 12				
30	**DH361FDK**	TH3361J	HF361J	H361AWK
60	**DH362FDK**	TH3362J	HF362J	H362AWK
100	**DH363FDK**	TH3363J	HF363J	H363AWK
200	**DH364FDK**	TH3364J	HF364J	H364AWK
400	**DH365FDK**	TH3365J	HF365J	H365AWK
600	**DH366FDK**	TH3366J	HF366J	H366AWK
800	**DH367FDK**	N/A	HF367J	H367AWK
1200	**N/A**	N/A	N/A	H368AWK
Fusible, Three-Pole, Four-Wire, 600 Vac, NEMA 12				
30	**DH361NDK**	THN3361J ①	HF361J ①	H361AWK ①
60	**DH362NDK**	THN3362J ①	HF362J ①	H362AWK ①
100	**DH363NDK**	THN3363J ①	HF363J ①	H363AWK ①
200	**DH364NDK**	THN3364J ①	HF364J ①	H364NAWK
400	**DH365NDK**	THN3365J ①	HF365J ①	H365NAWK
600	**DH366NDK**	THN3366J ①	HF366J ①	H366NAWK
800	**DH367NDK**	N/A	HF367J ①	H367NAWK
1200	**N/A**	N/A	N/A	H368NAWK
Fusible, Four-Pole, Four-Wire, 600 Vac, NEMA 12				
30	**N/A**	TH6661	N/A	H461AWK
60	**N/A**	TH6662	N/A	H462AWK
100	**DH463FDK**	TH6663	N/A	H463AWK
200	**DH464FDK**	TH6664	N/A	H464AWK
400	**N/A**	N/A	N/A	H465AWK

Notes

① Separate neutral kit required.

Always verify the number of poles and wires required since catalog numbers may appear in multiple tables.

Heavy-Duty, continued

Ampere Rating	Catalog Number Eaton	General Electric	Siemens	Square D
Non-Fusible, Two-Pole, Two-Wire, 600 Vac, NEMA 12				
30	**DH261UDK**	THN2261JDC	HNF261J	HU361AWK
60	**DH262UDK**	THN2262JDC	HNF262J	HU362AWK
100	**DH263UDK**	THN2263JDC	HNF263J	HU363AWK
200	**DH264UDK**	N/A	N/A	HU364AWK
400	**DH265UDK**	N/A	HNF265J	HU265AWK
600	**DH266UDK**	N/A	HNF266J	HU266AWK
800	**DH267UDK**	N/A	N/A	HU267AWK
1200	**N/A**	N/A	N/A	HU268AWK
Non-Fusible, Three-Pole, Three-Wire, 600 Vac, NEMA 12				
30	**DH361UDK**	THN3361J	HNF361J	HU361AWK
60	**DH362UDK**	THN3362J	HNF362J	HU362AWK
100	**DH363UDK**	THN3363J	HNF363J	HU363AWK
200	**DH364UDK**	THN3364J	HNF364J	HU364AWK
400	**DH365UDK**	THN3365J	HNF365J	HU365AWK
600	**DH366UDK**	THN3366J	HNF366J	HU366AWK
800	**DH367UDK**	N/A	HNF367J	HU367AWK
1200	**N/A**	N/A	N/A	HU368AWK
Non-Fusible, Four-Pole, Four-Wire, 600 Vac, NEMA 12				
30	**DH461UDK**	THN6661	N/A	HU461AWK
60	**DH462UDK**	THN6662	N/A	HU462AWK
100	**DH463UDK**	THN6663	N/A	HU463AWK
200	**DH464UDK**	THN6664	N/A	HU464AWK
400	**N/A**	N/A	N/A	HU465AWK

Heavy-Duty Six-Pole

Ampere Rating	Catalog Number Eaton	General Electric	Siemens	Square D
Fusible, Six-Pole, Six-Wire, 600 Vac, NEMA 3R				
30	**DH661FDK**	TH6661	F651H	N/A
60	**DH662FDK**	TH6662	F652H	N/A
100	**DH663FDK**	TH6663	F653H	N/A
200	**DH664FDK**	TH6664	N/A	N/A
Fusible, Six-Pole, Six-Wire, 600 Vac, NEMA 12				
30	**DH661FDK**	TH6661	F651H	N/A
60	**DH662FDK**	TH6662	F652H	N/A
100	**DH663FDK**	TH6663	F653H	H663AWK
200	**DH664FDK**	TH6664	N/A	H664RWK
Fusible, Six-Pole, Six-Wire, 600 Vac, NEMA 4X				
30	**N/A**	N/A	F651SS	N/A
60	**N/A**	N/A	F652SS	N/A
100	**N/A**	N/A	F653SS	H663DS
200	**N/A**	N/A	N/A	H664DS
Non-Fusible, Six-Pole, Six-Wire, 600 Vac, NEMA 3R				
30	**DH661UDK**	THN6661	NF651H	N/A
60	**DH662UDK**	THN6662	NF652H	N/A
100	**DH663UDK**	THN6663	NF653H	N/A
200	**DH664UDK**	THN6664	N/A	N/A
Non-Fusible, Six-Pole, Six-Wire, 600 Vac, NEMA 12				
30	**DH661UDK**	THN6661	NF651H	HU661AWK
60	**DH662UDK**	THN6662	NF652H	HU662AWK
100	**DH663UDK**	THN6663	NF653H	HU663AWK
200	**DH664UDK**	THN6664	N/A	HU664RWK
Non-Fusible, Six-Pole, Six-Wire, 600 Vac, NEMA 4X				
30	**DH661UWK**	N/A	NF651SS	HU661DS
60	**DH662UWK**	N/A	NF652SS	HU662DS
100	**DH663UWK**	N/A	NF653SS	HU663DS
200	**DH664UWK**	N/A	N/A	HU664DS

Note

Always verify the number of poles and wires required since catalog numbers may appear in multiple tables.

Double-Throw

Ampere Rating	Catalog Number Eaton	General Electric	Siemens	Square D
Fusible, Two-Pole, Two-Wire, 240 Vac, NEMA 1				
30	**DT321FGK**	TDT3321	N/A	N/A
60	**DT322FGK**	TDT3322	N/A	N/A
100	**DT323FGK**	TDT3323	N/A	DT223
200	**DT224FGK**	TDT3324	DTF224	DT224
400	**DT325FGK**	TDT3325	N/A	N/A
600	**DT326FGK**	TDT3326	N/A	N/A
Fusible, Three-Pole, Three-Wire, 240 Vac, NEMA 1				
30	**DT321FGK**	TDT3321	DTF321	DT321
60	**DT322FGK**	TDT3322	DTF322	DT322
100	**DT323FGK**	TDT3323	DTF323	DT323
200	**DT324FGK**	TDT3324	DTF324	DT324
400	**DT325FGK**	TDT3325	DTF325	N/A
600	**DT326FGK**	TDT3326	DTF326	N/A
Non-Fusible, Two-Pole, Two-Wire, 240 Vac, NEMA 1				
30	**DT221UGK**	N/A	DTNF221	92251
60	**DT222UGK**	N/A	DTNF222	DTU222
100	**DT223UGK**	N/A	DTNF223	DTU223
200	**DT224UGK**	N/A	DTNF224	DTU224
400	**DT225UGK**	N/A	DTNF225	92255
600	**DT226UGK**	N/A	DTNF226	N/A
800	**DT227UGK**	N/A	N/A	N/A
Non-Fusible, Three-Pole, Three-Wire, 240 Vac, NEMA 1				
30	**DT321UGK**	TC35321	DTNF321	DTU321
60	**DT322UGK**	TC35322	DTNF322	DTU322
100	**DT323UGK**	TC35323	DTNF323	DTU323
200	**DT324UGK**	TC35324	DTNF324	DTU324
400	**DT325UGK**	TC35325	DTNF325	92355
600	**DT326UGK**	TC35326	DTNF326	92356
800	**DT327UGK**	N/A	DTNF327	N/A
Fusible, Three-Pole, Three-Wire, 600 Vac, NEMA 1				
30	**DT361FGK**	TDT3361	DTF361	DT361
60	**DT362FGK**	TDT3362	DTF362	DT362
100	**DT363FGK**	TDT3363	DTF363	DT363
200	**DT364FGK**	TDT3364	DTF364	DT364
400	**DT365FGK**	TDT3365	DTF365	N/A
600	**N/A**	N/A	N/A	N/A
Non-Fusible, Two-Pole, Two-Wire, 600 Vac, NEMA 1				
30	**DT261UGK**	N/A	DTNF261	N/A
60	**DT262UGK**	N/A	DTNF262	82342
100	**DT263UGK**	N/A	DTNF263	82343
200	**DT264UGK**	N/A	DTNF264	82344
400	**DT265UGK**	N/A	DTNF265	92345
600	**DT266UGK**	N/A	DTNF266	92346

Double-Throw, continued

Ampere Rating	Catalog Number Eaton	General Electric	Siemens	Square D
Non-Fusible, Three-Pole, Three-Wire, 600 Vac, NEMA 1				
30	**DT361UGK**	TC35361	DTNF361	DTU361
60	**DT362UGK**	TC35362	DTNF362	DTU362
100	**DT363UGK**	TC35363	DTNF363	DTU363
200	**DT364UGK**	TC35364	DTNF364	DTU364
400	**DT365UGK**	TC35365	DTNF365	92345
600	**DT366UGK**	TC35366	DTNF366	92346
800	**DT367UGK**	N/A	DTNF367	N/A
1200	**N/A**	N/A	N/A	N/A
Non-Fusible, Four-Pole, Four-Wire, 600 Vac, NEMA 1				
30	**N/A**	N/A	N/A	N/A
60	**N/A**	N/A	N/A	DTU462
100	**N/A**	N/A	N/A	DTU463
200	**DT464UGK**	N/A	NF454DTK	DTU464
400	**DT465UGK**	N/A	NF455DTK	92445
600	**DT466UGK**	N/A	NF456DTK	92446
800	**DT467UGK**	N/A	NF457DTK	N/A
Fusible, Two-Pole, Two-Wire, 240 Vac, NEMA 3R				
30	**DT321FRK**	TDT3321R	N/A	N/A
60	**DT322FRK**	TDT3322R	N/A	N/A
100	**DT323FRK**	TDT3323R	N/A	DT223RB
200	**DT224FRK**	TDT3324R	DTF224R	DT224RB
Fusible, Three-Pole, Three-Wire, 240 Vac, NEMA 3R				
30	**DT321FRK**	TDT3321R	DTF321R	DT321RB
60	**DT322FRK**	TDT3322R	DTF322R	DT322RB
100	**DT323FRK**	TDT3323R	DTF323R	DT323RB
200	**DT324FRK**	TDT3324R	DTF324R	DT324RB
400	**DT325FRK**	N/A	FR325DTK	N/A
600	**DT326FRK**	N/A	FR326DTK	N/A
Non-Fusible, Two-Pole, Two-Wire, 240 Vac, NEMA 3R				
30	**N/A**	N/A	N/A	N/A
60	**N/A**	N/A	N/A	N/A
100	**DT223URK**	N/A	N/A	DTU223RB
200	**DT224URK**	N/A	DTNF224R	DTU224RB
400	**DT225URK**	N/A	DTNF225R	92255R
Non-Fusible, Three-Pole, Three-Wire, 240 Vac, NEMA 3R				
30	**N/A**	N/A	N/A	N/A
60	**N/A**	N/A	N/A	N/A
100	**DT323URK**	N/A	DTNF323R	DTU323RB
200	**DT324URK**	N/A	DTNF324R	DTU324RB
400	**DT325URK**	N/A	N/A	92355R
600	**N/A**	N/A	N/A	92356R

Note

Always verify the number of poles and wires required since catalog numbers may appear in multiple tables.

Double-Throw, continued

Ampere Rating	Catalog Number Eaton	General Electric	Siemens	Square D
Fusible, Three-Pole, Three-Wire, 600 Vac, NEMA 3R				
30	**N/A**	N/A	N/A	DT361RB
60	**N/A**	N/A	N/A	DT362RB
100	**DT363FRK**	N/A	DTF363R	DT363RB
200	**DT364FRK**	N/A	DTF364R	DT364RB
400	**DT365FRK**	N/A	FR355DTK	N/A
Non-Fusible, Two-Pole, Two-Wire, 600 Vac, NEMA 3R				
30	**N/A**	N/A	N/A	N/A
60	**N/A**	N/A	N/A	82342RB
100	**N/A**	N/A	N/A	82343RB
200	**DT264URK**	N/A	DTNF264R	82344RB
400	**DT265URK**	N/A	DTNF265R	92345RB
600	**DT266URK**	N/A	NFR256DTK	92346RB
Non-Fusible, Three-Pole, Three-Wire, 600 Vac, NEMA 3R				
30	**DT361URK**	N/A	DTNF361R	DTU361RB
60	**DT362URK**	N/A	DTNF362R	DTU362RB
100	**DT363URK**	N/A	DTNF363R	DTU363RB
200	**DT364URK**	N/A	DTNF364R	DTU364RB
400	**DT365URK**	N/A	DTNF365R	92345RB
600	**DT366URK**	N/A	DTNF366R	92346RB
800	**DT367URK**	N/A	DTNF367R	N/A
Non-Fusible, Four-Pole, Four-Wire, 600 Vac, NEMA 3R				
30	**DT461URK**	N/A	NFR451DTK	N/A
60	**DT462URK**	N/A	NFR452DTK	92442RB
100	**DT463URK**	N/A	NFR453DTK	92443RB
200	**DT464URK**	N/A	NFR454DTK	92444RB
400	**DT465URK**	N/A	NFR455DTK	92445R
600	**DT466URK**	N/A	NFR456DTK	92446R
800	**DT467URK**	N/A	NFR457DTK	N/A
Non-Fusible, Six-Pole, Six-Wire, 600 Vac, NEMA 3R				
30	**DT661URK**	N/A	NFR651DTK	N/A
60	**DT662URK**	N/A	NFR652DTK	N/A
100	**DT663URK**	N/A	NFR653DTK	N/A
Non-Fusible, Two-Pole, Two-Wire, 240 Vac, NEMA 12 ①				
30	**DT361UDK**	N/A	DTNF361J	H92251
60	**DT362UDK**	N/A	DTNF362J	H82252
100	**DT363UDK**	N/A	DTNF363J	H82253
200	**DT364UDK**	N/A	DTNF364J	H82254
400	**DT365UDK**	N/A	NF355HDTK	H92255
Non-Fusible, Three-Pole, Three-Wire, 240 Vac, NEMA 12 ①				
30	**DT361UDK**	N/A	DTNF361J	H92351
60	**DT362UDK**	N/A	DTNF362J	DTU362AWK
100	**DT363UDK**	N/A	DTNF363J	DTU363AWK
200	**DT364UDK**	N/A	DTNF364J	DTU364AWK
400	**DT365UDK**	N/A	NF355HDTK	H92355
600	**N/A**	N/A	N/A	H92356
Non-Fusible, Four-Pole, Four-Wire, 240 Vac, NEMA 12				
30	**N/A**	N/A	N/A	H92451
60	**N/A**	N/A	N/A	DTU462AWK
100	**N/A**	N/A	N/A	DTU463AWK
200	**N/A**	N/A	N/A	DTU464AWK
400	**N/A**	N/A	N/A	H92455
600	**N/A**	N/A	N/A	H92456

Double-Throw, continued

Ampere Rating	Catalog Number Eaton	General Electric	Siemens	Square D
Non-Fusible, Two-Pole, Two-Wire, 600 Vac, NEMA 12				
30	**DT361UDK**	N/A	DTNF361J	N/A
60	**DT362UDK**	N/A	DTNF362J	H82342
100	**DT363UDK**	N/A	DTNF363J	H82343
200	**DT364UDK**	N/A	DTNF364J	H82344
400	**DT365UDK**	N/A	NF355HDTK	H92345
600	**N/A**	N/A	N/A	H92346
Non-Fusible, Three-Pole, Three-Wire, 600 Vac, NEMA 12				
30	**DT361UDK**	N/A	DTNF361J	N/A
60	**DT362UDK**	N/A	DTNF362J	DTU362AWK
100	**DT363UDK**	N/A	DTNF363J	DTU363AWK
200	**DT364UDK**	N/A	DTNF364J	DTU364AWK
400	**DT365UDK**	N/A	NF355HDTK	H92345
600	**N/A**	N/A	N/A	H92346
Non-Fusible, Four-Pole, Four-Wire, 600 Vac, NEMA 12				
30	**N/A**	N/A	N/A	N/A
60	**N/A**	N/A	N/A	DTU462AWK
100	**N/A**	N/A	N/A	DTU463AWK
200	**N/A**	N/A	N/A	DTU464AWK
400	**N/A**	N/A	N/A	H92445
600	**N/A**	N/A	N/A	H92446
Non-Fusible, Two-Pole, Two-Wire, 600 Vac, NEMA 4X				
30	**DT361UWK**	N/A	DTNF361S	N/A
60	**DT362UWK**	N/A	DTNF362S	82342DS
100	**DT363UWK**	N/A	DTNF363S	82343DS
200	**DT364UWK**	N/A	DTNF364S	82344DS
400	**DT365UWK**	N/A	NF355SSDTK	N/A
Non-Fusible, Three-Pole, Three-Wire, 600 Vac, NEMA 4X				
30	**DT361UWK**	N/A	DTNF361S	N/A
60	**DT362UWK**	N/A	DTNF362S	DTU362DS
100	**DT363UWK**	N/A	DTNF363S	DTU363DS
200	**DT364UWK**	N/A	DTNF364S	DTU364DS
400	**DT365UWK**	N/A	NF355SSDTK	N/A
Non-Fusible, Four-Pole, Four-Wire, 600 Vac, NEMA 4X				
30	**N/A**	N/A	N/A	N/A
60	**N/A**	N/A	N/A	DTU462DS
100	**N/A**	N/A	N/A	DTU463DS
200	**N/A**	N/A	N/A	DTU464DS
Fusible, Three-Pole, Three-Wire, 600 Vac, NEMA 4X				
30	**DT361FWK**	N/A	F351SSDTK	N/A
60	**DT362FWK**	N/A	F352SSDTK	N/A
100	**DT363FWK**	N/A	F353SSDTK	N/A
200	**DT364FWK**	N/A	F354SSDTK	N/A
400	**DT365FWK**	N/A	F355SSDTK	N/A

Notes

① Eaton and Siemens switches shown are 600V switches.

Always verify the number of poles and wires required since catalog numbers may appear in multiple tables.

Catalog Number Selection

Safety Switch

DH 3 6 1 N D K LW

Switch Type
- **DP** = General-duty/plug fuse
- **DG** = General-duty/cartridge fuse
- **DH** = Heavy-duty
- **DT** = Double-throw
- **DR** = Rotary switch
- **DS** = Classified location with DS interior

Poles/Blades
- **1** = 1-pole
- **2** = 2-pole
- **3** = 3-pole
- **4** = 4-pole
- **6** = 6-pole

Voltage
- **1** = 120 Vac
- **2** = 240 Vac
- **6** = 600 Vac

Ampere Rating
- **1** = 30A
- **2** = 60A
- **3** = 100A
- **4** = 200A
- **5** = 400A
- **6** = 600A
- **7** = 800A
- **8** = 1200A

Fusible/Non-Fusible or Neutral
- **F** = Fusible without neutral
- **U** = Non-fusible
- **N** = Fusible with neutral

NEMA Enclosure Ratings
- **G** = NEMA 1
- **R** = NEMA 3R
- **D** = NEMA 12 or 12/3R
- **P** = NEMA 4 (painted steel)
- **W** = NEMA 4X (corrosion-resistant (304 Grade stainless steel)
- **C** = NEMA 4X non-metallic (for Type DH)
- **X** = NEMA 7/9 (for Type DS)
- **X** = NEMA 4X non-metallic (for Type DR)

Series
- **K** = Design all general-duty switches above 200A and all heavy-duty switches incorporate K-Series switch design features listed below
- **B** = Design general-duty 30–100A
- **H** = General-duty double-throw switch (compact design 30–100A)

Options ①
- **W** = Upper viewing window ②
- **LW** = Lower viewing window ②
- **X** = EnviroLine stainless (enclosure and mechanism)
- **GCL** = Mill-duty

Notes

① See **Pages V2-T1-16** through **V2-T1-19** for additional Flex Center options.

② Effective August 2003, 30–100A window switches are replaced by a full view window that allows blade position verification and blown fuse indication. See **Page V2-T1-39** for catalog numbers.

This table is intended for use in breaking down existing catalog numbers. It is not intended for building new catalog numbers.

A factory-installed ground lug is supplied in all heavy-duty safety switches.

1

Options and Accessories

Safety Switches

DH030NK

DS200GK

DT100BK

DS16CP

DS200EK1

DS36CL

Description	Catalog Number
Neutral Kits/Ground Kits	
30A DG	**DG030NB**
60–100A DG	**DG100NB**
200A DG, DH (NEMA 1, 3R enclosures)	**DG200NK**
30–60A DH	**DH030NK**
100A DH	**DH100NK**
200A DH (NEMA 4X, 12 enclosures)	**DH200NK**
400A DG, DH	**DS400NK**
600A DG, DH	**DS600NK**
400–600A fusible DT, 800–1200A DH	**DS800NK**
30–100A DT	**DT100NK**
200A DT	**DT200NK**
400A non-fusible DT	**DT400NK**
600A non-fusible DT	**DT600NK**
800A DT	**DT800NK**
1200A DT	**DT1200NK**
Ground Lug Kits	
30–100A DG	**DG030GB**
30–100A DH, DT ①	**DS100GK**
200A DG, DH, DT	**DS200GK**
400–600A DG, 400–1200A DH, 400–800A DT	**DS468GK**
Switching Neutral Bonding Kits ②	
30–100A DT, 3P, 4P non-fusible	**DT100BK**
200A DT, 3P, 4P non-fusible	**DT200BK**
400A DT, 3P, 4P non-fusible	**DT400BK**
600A DT, 3P, 4P non-fusible	**DT600BK**
800–1200A DT, 3P, 4P non-fusible	**DT800BK**
Control Pole Kit (For 2P, 3P Switches)	
400–600A DG, 30–1200A DH, 30–800A DT	**DS16CP**
Auxiliary Contact Kits	
All switches (except 30–100A DG) 1NO/1NC	**DS200EK1 ③**
All switches (except 30–100A DG) 2NO/2NC	**DS200EK2 ③**
NEMA 7/9 switches (30–100A) 1NO/1NC	**178C265G05**
NEMA 7/9 switches (30–100A) 2NO/2NC	**178C265G06**
Copper Lug Kits	
30A DH, DT ④	**DS16CL**
60A DH, DT ④	**DS16CL**
100A DH, DT ④	**DS36CL**
200A DH ④	**DS46CL**
400A DH (NEMA 4, 4X, 12 enclosures) ⑤	**DS56CL**
600–800A DH (NEMA 4, 4X, 12 enclosures) ⑤	**DS66CL**

Safety Switches, continued

DS56CK

DS60FP

DS22JK

DS12FK

DS426TK

Description	Catalog Number
Crimp Lug Pad Kit (NEMA 4, 4X, 12 Enclosures)	
400–600A DH ④	**DS56CK**
800A DH ⑤	**DS76CK**
400–800A neutral DH ②	**DS800CNK**
Fuse Puller Kits	
30–60A DH ④	**DS30FP**
30–60A DH ⑥	**DS60FP**
100A DH ④	**DS100FP**
200A DH ④	**DS200FP**
"J" Fuse Adapter Kits ⑦⑧	
60A 240V DH ④	**DS22JK**
60A DH, DT and receptacle switches ④	**DS26JK**
400A 600V DT ⑨	**DT400JK**
600A 240–600V DH, 600A DG ⑤	**DS600JK**
"R" Fuse Adapter Kits ④	
30A DG	**DG030RB**
100A DG	**DG100RB**
30A 240V DH, DT	**DS12FK**
30A 600V DH, DT, 60A 240V DH, DT, 60A DG	**DS16FK**
60A 600V DH, DT	**DS26FK**
100A 240–600V DH, DT	**DS36FK**
200A 240–600V DH, DT, 200A DG	**DS46FK**
400A 240–600V DH, 240V DT, 400A DG	**DS56FK**
600A 240–600V DH, DT, 600A DG	**DS66FK**
"T" Fuse Adapter Kits	
200A 240V DH ④	**DS426TK**
200A 600V DH ④	**DS466TK**
400A 240V DG, DH, DT ⑤	**DS526TK**
400A 600V DH ⑤	**DS566TK**
600A 240V DG, DH ⑤	**DS626TK**
600A 600V DH ⑤	**DS666TK**
600A 240V ⑤	**DT626TK**
600A 600V ⑤	**DT666TK**
800A 240V DH ⑤	**DS726TK**
800A 600V DH, DT ⑤	**DS766TK**
Hookstick handle	**DH800HSH**
Lubricating grease for safety switch blades and contacts (each kit contains three 30 cc tubes of lubricating grease)	**DSLUBEKIT**

Notes

① Ground bar kit is not listed on device publications.
② Order one kit per switch.
③ For duty ratings, see table on following page.
④ Order one kit for three poles.
⑤ Order one kit for each pole.
⑥ Receptacle switches.
⑦ 30A Class J available as factory option only.
⑧ If Class J fuse kit is not listed, then switch will accept Class J fusing by repositioning either fuse base or fuse clips. No drilling required.
⑨ Order one kit for six poles.

Accessories are not applicable to NEMA 7/9 switches unless indicated otherwise.

A factory-installed ground lug is supplied in all heavy-duty safety switches.

Auxiliary Contact Rating

AC Pilot Duty Ratings

Catalog Number	Description	Volts	Break (Amperes)	Make (Amperes)
DS200EK1	1NO-1NC	110	15.0	40.0
DS200EK1	1NO-1NC	220	10.0	20.0
DS200EK1	1NO-1NC	440	6.0	10.0
DS200EK1	1NO-1NC	600	5.0	8.0
DS200EK2	2NO/2NC	110	3.0	30.0
DS200EK2	2NO/2NC	220	1.5	15.0
DS200EK2	2NO/2NC	440	1.0	8.0
DS200EK2	2NO/2NC	600	0.8	6.0

DC Pilot Duty Ratings

Catalog Number	Description	Volts	Single Throw (Amperes)	Double Throw (Amperes)
DS200EK1	1NO-1NC	115	2.0	0.5
DS200EK1	1NO-1NC	230	0.5	0.2
DS200EK1	1NO-1NC	600	0.1	0.02
DS200EK2	2NO/2NC	115	1.0	0.2
DS200EK2	2NO/2NC	230	0.3	0.1
DS200EK2	2NO/2NC	600	0.1	—

Approximate Dimensions in Inches (mm)

DS050MH

Myers Type Hubs

NEMA 3R (400A and above)
NEMA 4, 4X (stainless steel), 12

Catalog Number	Conduit Size
DS050MH	0.50 (12.7)
DS075MH	0.75 (19.1)
DS100MH	1.00 (25.4)
DS125MH	1.25 (31.8)
DS150MH	1.50 (38.1)
DS200MH	2.00 (50.8)
DS250MH	2.50 (63.5)
DS300MH	3.00 (76.2)
DS350MH	3.50 (88.9)
DS400MH	4.00 (101.6)
DS500MH	5.00 (127.0)

DS075H1

Plate Type Hubs

For NEMA 3R enclosures (up to 200A)

Group 1 General-Duty, Heavy-Duty, Double-Throw Through 100A		Group 2 General-Duty, Heavy-Duty, Double-Throw—200A	
Catalog Number	**Conduit Size**	**Catalog Number**	**Conduit Size**
DS075H1	0.75 (19.1)	**DS200H2**	2.00 (50.8)
DS100H1	1.00 (25.4)	**DS250H2**	2.50 (63.5)
DS125H1	1.25 (31.8)	**DS300H2**	3.00 (76.2)
DS150H1	1.50 (38.1)	—	—
DS200H1	2.00 (50.8)	—	—

Catalog number **DS900AP** adapter kit permits Installation of Group 1 hubs on 200A type general-duty, heavy-duty and double-throw switches.

Contact the Flex Center at 1-888-329-9272 or FlexSwitches@eaton.com for information on hubs for non-metallic NEMA 4X switches.

1

Modifications—Flex Center

Introduction

The Safety Switch Flex Center is a special facility at the site of our Cleveland, Tennessee, plant that is dedicated to providing customized safety switches that meet customer's challenging applications.

Eaton's Flex Center is a solutions center that provides real value:

- A dedicated and knowledgeable engineering/manufacturing/customer service team to meet your needs
- A production facility stocked with a full arsenal of equipment to get the job done
- The industry's shortest lead-time
- Easy ordering through our distributors

Description	Suffix	Item
Nameplates	NP	1
Fungus proofing	FP	2
Special paint		3
Lock-on provisions on heavy-duty safety switches for most enclosure types	LO	4
Trapped key interlock systems	TK	5
Upper cover viewing window	W	6
Lower cover viewing window	LW	7
Neutral assemblies factory installed for double-throw safety switches	N	8
Class "R" fuse clips factory installed for heavy-duty switches	5 or 6	9
Class "T" fuse clips factory installed for heavy-duty switches	T	10
Class "J" fuse clips factory installed for heavy-duty and double-throw safety switches	J	11
Fuse pullers factory installed	FE	12
Special crimp lug pads factory installed for general-duty and heavy-duty switches	CK	13
Copper lugs factory installed	CL	14
Equipment ground lugs factory installed	G	15
Custom lug configurations	L	16
Auxiliary contacts factory installed	2 or 3	17
Control pole factory installed	CP	18
Switching neutral double-throw	SN	19
Neutral assemblies factory installed for single-throw non-fusible safety switches	N	20
How to order		21
How to price		22

1. Nameplates

Price covers up to three lines of text with a maximum of 25 characters per line. Standard nameplates are laser-engraved plastic and have black letters on a white background. Rotary-engraved phenolic nameplates are also available at a premium. Additional color combinations and larger nameplates are available. Contact the Flex Center for price and availability for these special requirements. Customer must specify the text when placing an order.

Item 1

Description
Plastic nameplate—up to three lines
Phenolic nameplate—up to three lines

2. Fungus Proofing

All non-metallic components of the switch are coated with a moisture and fungus-resistant varnish. The inhibitor used meets military specification: MIL-V-173C for MOISTURE AND FUNGUS-RESISTANT TREATMENT. The treated switch meets military specification: MIL-T-152E for MOISTURE AND FUNGUS-RESISTANT TREATMENT OF COMMUNICATIONS, ELECTRONICS AND ASSOCIATED EQUIPMENT. Not UL listed.

Item 2

Ampere Rating
30
60
100
200
400
600
800
1200

To order, **add Suffix FP** to standard safety switch catalog number. *Example:* **DH363FGKFP**.

3. Special Paint

Special paint colors are available for order quantities of five or more switches. Colors available are red, orange, yellow, green, black and white. Custom color is applied over the standard ANSI-61 gray finish.

Minimum quantity of five of the same color is required. Order by description. For quantities less than five, higher ampere ratings, or other color request, contact the Safety Switch Flex Center.

Item 3

Ampere Rating
30
60
100
200
400
600

4. Lock-On Provisions on Heavy-Duty Safety Switches for Most Enclosure Types

Available on 30–800A heavy-duty and double-throw safety switches. Provision will accept a single lock.

To order, **add Suffix LO** to the standard catalog number. *Example:* **DH362FRKLO**.

5. Trapped Key Interlock Systems

Available only on heavy-duty and double-throw safety switches. Trapped key systems are used on safety switches to prevent unauthorized operations or to predetermine a series of power transfers by an authorized operator.

Before system construction can begin, the following information must be provided to the Flex Center:

- User—name, address and telephone number
- Complete coordination (lock scheme) required with order

To order, **add Suffix TK** to the standard catalog number. *Example:* **DH363FWKTK**.

Item 5

Ampere Rating	Switch Type
30–1200	Heavy-duty
30–800	Double-throw

6. Upper Cover Viewing Window

Upper viewing window is centered over the switching contacts to provide visual verification of ON/OFF status. Available on most heavy-duty NEMA 4X stainless steel and NEMA 12/3R and double-throw enclosures. Not available on non-metallic enclosures. To order, **add Suffix W** to the standard catalog number.

Note: 30–100A window switches are now provided with a full view cover window for blade verification and blown fuse indication.

7. Lower Cover Viewing Window

Lower viewing window is positioned over fuses and provides visual verification of blown fuse indicators for Littelfuse, Inc.™ fuses. Available in 200–600A, two- and three-pole heavy-duty NEMA 4X stainless steel and NEMA 12/3R enclosures. Not available on nonmetallic enclosures. To order, **add Suffix LW** to standard catalog number.

Note: 30–100A window switches are now provided with a full view cover window for blade verification and blown fuse indication.

Items 6 and 7

Viewing Window (Upper or Lower) Ampere Rating
30–200
400–800

Contact the Safety Switch Flex Center for lead-time.

8. Neutral Assemblies Factory Installed for Double-Throw Safety Switches

Item 8

Ampere Rating	Switch Type Two- and Three-Pole
30	Fusible and non-fusible
60	Fusible and non-fusible
100	Fusible and non-fusible
200	Fusible and non-fusible
400	Non-fusible
600	Non-fusible
400	Fusible
600	Fusible
800	Non-fusible

To order, **add Suffix N** on non-fusible switches OR replace 6th character F with N on fusible switches. The total price is the standard switch price plus the price adder.

Example 1: **DT361URKN** non-fusible double-throw, three-pole, 30A switch with factory-installed neutral assembly.

Example 2: **DT363NRK** fusible double-throw, three-pole, 100A switch with factory-installed neutral assembly.

9. Class "R" Fuse Clips Factory Installed for Heavy-Duty Switches

Item 9

Ampere Rating	Voltage
30	240 and 600
60	240 and 600
100	240 and 600
200	240 and 600
400	240 and 600
600	240 and 600

To order, **add Suffix 5** to the standard catalog number for 240V application. **Add Suffix 6** to standard catalog number for 600V application. Total price is the standard catalog number price plus the price adder from the table above depending on the number of safety switch poles.

Example: **DH324FRK5** heavy-duty, three-pole, 200A switch at 240V with factory-installed Class "R" fuse clips.

10. Class "T" Fuse Clips Factory Installed for Heavy-Duty Switches

Item 10

Ampere Rating	Voltage
200	240
	600
400	240
	600
600	240
	600
800	240
	600
1200	240
	600

To order, **add Suffix T** to the standard catalog number (catalog number identifies voltage). Total price is the standard catalog number price plus the price adder depending on the number of safety switch poles.

Example: **DH364FGKT** heavy-duty, three-pole, 200A fusible switch at 480V with factory-installed Class "T" Fuse Clips.

11. Class "J" Fuse Clips Factory Installed for Heavy-Duty and Double-Throw Safety Switches

Item 11

Ampere Rating	Voltage	Switch Type
30	240	Heavy-duty and double-throw
	600	Heavy-duty and double-throw
60	240	Heavy-duty and double-throw
	600	Heavy-duty and double-throw
100	240	Heavy-duty and double-throw
	600	Heavy-duty and double-throw
200	240	Heavy-duty and double-throw
	600	Heavy-duty and double-throw
400	600	Double-throw
600	240	Heavy-duty
	600	Heavy-duty

Total price is the standard catalog number price plus the price adder from the table above depending on the number of safety poles. Order by description. A table of common 30A heavy-duty switches with "J" fuse clips factory installed is shown on **Page V2-T1-18 (field modification kits are not available for 30A heavy-duty switches)**.

Common 30A Heavy-Duty Switches with "J" Fuse Clips Factory Installed

Voltage	Switch Type Three-Pole	Catalog Number
240	NEMA 1	**DH321FGKJ**
	NEMA 3R	**DH321FRKJ**
	NEMA 12	**DH321FDKJ**
	NEMA 4X	**DH321FWKJ**
600	NEMA 1	**DH361FGKJ**
	NEMA 3R	**DH361FRKJ**
	NEMA 12	**DH361FDKJ**
	NEMA 4X	**DH361FWKJ**

To order, **add Suffix J** to the standard catalog number (catalog number identifies voltage). Total price is the standard catalog number price plus the price adder depending on the number of safety switch poles.

Example: **DH363FGKJ** heavy-duty, three-pole, 200A fusible switch at 480V with factory-installed Class "J" fuse clips.

12. Fuse Pullers Factory Installed

Item 12

Ampere Rating	Switch Type
30–60	Heavy-duty
100	Heavy-duty
200	General-duty and heavy-duty

To order, **add Suffix FE** to the standard catalog number. *Example:* **DH361FRKFE**.

Note: Standard NEMA 12/3R, 4 and 4X switches through 200A are supplied with fuse pullers from the factory.

13. Special Crimp Lug Pads Factory Installed for General-Duty and Heavy-Duty Switches (Crimp Lugs are Not Included)

To order **add Suffix CK** to the standard safety switch catalog number.

Item 13

Ampere Rating
400–600
800

Heavy-duty Type DH switches, 30–200A are adaptable to crimp lugs, simply remove the box lugs.

14. Copper Lugs Factory Installed

Item 14

Ampere Rating	Switch Type
30	Heavy-duty
	Double-throw
60	Heavy-duty
	Double-throw
100	Heavy-duty
	Double-throw
200	Heavy-duty
400	General-duty and heavy-duty
600	General-duty and heavy-duty

To order, **add Suffix CL** to the standard safety switch catalog number. The total price is the standard switch price plus the price adder.

Example: **DH221FGKCL** heavy-duty, two-pole, 30A fusible switch at 240V with copper lugs factory installed.

15. Equipment Ground Lugs Factory Installed for General-Duty and Heavy-Duty Switches

Item 15

Ampere Rating
30–100
200
400–1200

To order, **add Suffix G** to the standard Safety Switch Catalog Number. The total price is the standard switch price plus the price adder.

16. Custom Lug Configurations

Customer-specified lug arrangements are available on heavy-duty and double-throw safety switches. Contact the Safety Switch Flex Center for price and lead-time.

17. Auxiliary Contacts Factory Installed Provide Early-Make/Early-Break Operation

Item 17

General-Duty Switches 200–600A, Non-Metallic 30–200A, Heavy-Duty 30–1200A and Double-Throw Switches 30–800A

Ampere Rating	Description
30–200	1NO/1NC
	2NO/2NC
400–1200	1NO/1NC
	2NO/2NC

To order 1NO/1NC contacts, **add Suffix 2** to the standard safety switch catalog number.

To order 2NO/2NC contacts, **add Suffix 3** to the standard safety switch catalog number.

The total price is the standard switch price plus the price adder.

Example: **DH423FGK2** Heavy-duty, four-pole, 100A fusible switch at 240V with factory-installed 1NO/1NC contacts.

Example: **DT324FGK22** double-throw, three-pole, 200A fusible switch at 240V with two factory-installed contacts (one installed in the normal ON position and one installed in the auxiliary ON position).

18. Control Pole Factory Installed Provides Late-Make/Early-Break Operation

The K-Series control pole provides one normally open contact, late-make, early-break operation. It mounts in the exact location as the neutral block using the same pre-drilled holes. This is directly connected to the power pole operating shaft. Direct connection and visible blades provide more secure electrical interlocking than handle linkage operation of a snap/switch type interlock. This reliability meets the requirements of many specifications for four-pole switches when the fourth pole is required for secure electrical interlocking.

Item 18

Ampere Rating	Switch Type
30–1200	Heavy-duty
30–200	Double-throw
400–600	General-duty

To order, **add Suffix CP** to the standard safety switch catalog number. The total price is the standard switch price plus the price adder.

Example: **DH267FGKCP** heavy-duty, two-pole, 800A fusible switch at 480V with factory-installed control pole.

19. Switching Neutral Double-Throw

UL listed for three-pole and four-pole non-fusible double-throw safety switches. Switching neutrals are required for separately derived systems when bonding the neutral of the generator to a grounding system at the generator.

Item 19

Ampere Rating
30–200
400
600
800

To order, **add Suffix SN** to the standard safety switch catalog number. The total price is the standard switch price plus the price adder.

Example: **DT324URKSN** non-fusible double-throw, three-pole, 200A switch with factory-installed switching neutral.

20. Neutral Assemblies Factory Installed for Single-Throw Non-Fusible Safety Switches

Available on 200–600A general-duty safety switches and 30–1200A heavy-duty safety switches.

Item 20

Ampere Rating
30–60
100
200 NEMA 4, 4X, 12
200 NEMA 1, 3R
400
600
800
1200

To order, **add Suffix N** to the standard safety switch catalog number.

Example: **DH364UWKN** Heavy-duty, three-pole, 200A, NEMA 4X.

21. How to Order

Step One: Contact the Safety Switch Flex Center for price and delivery on product being modified. An authorized negotiation (TSP) number will be provided to track your order.

Safety Switch Flex Center
Phone: **1-888-329-9272** or FlexSwitches@eaton.com
Fax: **1-423-478-0270**

Step Two: Enter the order on VISTALINE™ by description (with catalog number if it applies) and reference the authorized negotiation (TSP) number.

Vista suffix will be "ETS."
Product code will be "BE90."

For order entry assistance, contact CSC at:
Phone: **1-800-356-1243**
Fax: **1-800-752-8602**

22. How to Price

Step One: Select catalog number from **Pages V2-T1-14** through **V2-T1-83** of this catalog or Vista of the switch that needs to be modified.

Step Two: Use the correct price (from Vista or the current Price and Availability Digest) of the switch that needs to be modified. If no price exists, Flex Center will provide one.

Step Three: Refer to the modification on **Pages V2-T1-16** through **V2-T1-19** for price additions.

Example: **DT363URK**
Options: factory installed
Neutral (N)
Copper lugs (CL)
(3 x 120.00)

Step Four: Contact the Safety Switch Flex Center for authorized price and lead-time.

Note: Existing DSP, CSP and DOP pricing does not apply.

For application, availability or pricing questions, contact the Safety Switch Flex Center at **1-888-329-9272** or FlexSwitches@eaton.com.

Additional Safety Switch Flex Center Design Offerings

- Left-hand design (30–200A)
- Cover-mounted status lights and selector switches
- Integrated:
  - Transient Voltage Surge Suppression (TVSS)
  - Current transformers
- Double-throw receptacle switches
- 200% neutrals
- Seam-welded stainless steel
- Gang-operated kits:
  - Mechanically interlocks two or three separate switches
- Cam-Lok® and Posi-Lok® receptacles
- Reverse feed
- Integrated wattmeter
- Custom enclosures
- Double-throw switches with windows
- 316 grade stainless steel
- Breather/drains
- Voltage/phase monitor

Literature

The Safety Switch Flex Center's innovative approach to flexible engineering, manufacturing and customer service provides the shortest production, design and delivery cycle in the industry. Find out more about how the Safety Switch Flex Center can give you the safety switch solution you need...when you need them. Order Sales Aid SA00801002E from Eaton's Literature Fulfillment Center by calling **1-800-957-7050**.

1

Technical Data and Specifications

Standard Lug Capacities

Description	Minimum Wire Size	Maximum Wire Size	Wire Type
30A DP	#14 #12	#10 #10	Cu **or** ① Al
30A DG	#14	#6	Cu/Al
30A DH, DT	#14	#2	Cu/Al
60A DG	#14	#1/0	Cu/Al
60A DH, DT	#14	#2	Cu/Al
100A DG ②	#14	#1/0	Cu/Al
100A DH, DT	#14	#1/0	Cu/Al
200A DG, DT	#6	250 kcmil	Cu/Al
200A DH Type 1 and 3R	#6	250 kcmil	Cu/Al
200A DH Type 4 and 12	#6	300 kcmil	Cu/Al
400A DG, DH, DT	(2) #1/0 (1) #1/0	(2) 300 kcmil (1) 750 kcmil	Cu/Al **or** ① Cu/Al
600A DG, DH	(1) #2 (1) #1/0	(1) 600 kcmil (1) 750 kcmil	Cu/Al **and** ③ Cu/Al
600A non-fusible DT	(2) #250	(2) 500 kcmil	Cu/Al
800A DH	(4) #1/0	(4) 750 kcmil	Cu/Al
800A DT, 600A fusible DT	(3) #250	(3) 500 kcmil	Cu/Al
1200A DH, DT	(4) #1/0	(4) 750 kcmil	Cu/Al
Copper-Bodied Lugs			
30A Cu	#14	#6	Cu
60A Cu	#14	#4	Cu
100A Cu	#6	#1/0	Cu
200A Cu	#6	250 kcmil	Cu
400A Cu	#1/0	500 kcmil	Cu
600–800A Cu	(2) #1/0	(2) 500 kcmil	Cu

Notes

① Single barrel lug that accepts one or two cables per phase as detailed above.

② The maximum size aluminum or copper-clad aluminum wire allowable for applications where the conductor enters or leaves the enclosure through the wall opposite its terminal is #1 gauge.

③ Double barrel lug that accepts two cables per phase as detailed above.

Although certain lug capacities are larger than required, only minimum wire bending space is provided per the requirements noted in NEC® Tables 373.6 (a) and (b) for respective ampere ratings.

A factory-installed ground lug is supplied in all heavy-duty safety switches.

General-Duty

Short-Circuit Ratings Using Class "R", "J" or "T" Fusing Where Applicable ①

Ampere Rating	Short-Circuit Ratings (Amperes) Type 1	Type 3R
30	100k at 240V	100k at 240V
60	100k at 240V	100k at 240V
100	100k at 240V	100k at 240V
200	100k at 240V	100k at 240V
400	100k at 250V	100k at 250V
600	100k at 250V	100k at 250V

Shunt Trip Safety Switch

Short-Circuit Ratings Using Class "R," "J/L" or "T" Fusing ②

Ampere Rating	480V	600V
30	200 kAIC	200 kAIC
60	200 kAIC	200 kAIC
100	200 kAIC	200 kAIC
200	200 kAIC	100 kAIC
400	200 kAIC	100 kAIC
600	200 kAIC	100 kAIC
800	200 kAIC	200 kAIC

Heavy-Duty

Short-Circuit Ratings Using Class "R," "J" or "T" Fusing Where Applicable ①

Ampere Rating	Short-Circuit Ratings (Amperes) Type 1	Type 3R	Type 12	Type 4 and 4X
30	200k at 600V	200k at 600V	200k at 600V	200k at 600V
60	200k at 600V	200k at 600V	200k at 600V	200k at 600V
100	200k at 480V 100k at 600V	200k at 480V 100k at 600V	200k at 600V	200k at 600V
200	200k at 600V	200k at 600V	200k at 600V	200k at 600V
400	200k at 480V 100k at 600V	200k at 480V 100k at 600V	200k at 480V 100k at 600V	200k at 480V 100k at 600V
600	200k at 480V 100k at 600V	200k at 480V 100k at 600V	200k at 480V 100k at 600V	200k at 480V 100k at 600V
800 ③	200k at 480V 100k at 600V	200k at 480V 100k at 600V	200k at 480V 100k at 600V	200k at 480V 100k at 600V
1200 ③	200k at 600V	200k at 600V	200k at 600V	200k at 600V

Double Throw

Short-Circuit Ratings Using Class "R," "J" or "T" Fusing where Applicable ④⑤⑥⑦⑧

Ampere Rating	Short-Circuit Ratings (Amperes) (600V) Type 1	Type 3R	Type 12	Type 4 and 4X
30	100k	100k	100k	100k
60	100k	100k	100k	100k
100	100k	100k	100k	100k
200	100k	100k	100k	100k
400	100k	100k	100k	100k
600	100k	100k	100k	100k
800	100k	100k	—	—
1200	100k	100k	—	—

Notes

① Class "H" fuse clips supplied as standard for 30–600A. Rated at 10,000A rms symmetrical when using Class "H" fuses.

② Non-fusible values are based on combination rating with upstream device (see TD00801005E).

③ Class "L" fuse connectors supplied as standard for 800A and 1200A.

④ Class "H" fuse clips supplied as standard for 30–600A, except Class "T" for 400A at 600V and 600A at 240V. Rated at 10,000A rms symmetrical when using Class "H" fuses.

⑤ Class "L" fuse connectors supplied as standard for 800A and 1200A.

⑥ Safety switch short-circuit ratings are applicable to AC only.

⑦ Safety switch I^2t and Ip values are identical to UL maximum acceptable I^2t and Ip values for the corresponding class fuse.

⑧ Table above is not applicable to the compact design shown on **Page V2-T1-47**. The compact design is suitable for use on a circuit capable of delivering not more than 10,000 rms symmetrical amperes.

Short-Circuit Ratings of Non-Fusible Switches

The UL listed short-circuit ratings for Eaton non-fusible switches are based on the switches being properly protected by overcurrent protective devices. For applications that require a UL listed short-circuit rating of 10,000 rms symmetrical amperes or less, an Eaton non-fusible switch must be properly protected by any overcurrent protective device rated no greater than the ampere rating of the switch. For applications that require a UL listed short-circuit rating of greater than 10,000 rms symmetrical amperes, an Eaton non-fusible switch must be properly protected by the appropriate class and size fusing noted. Otherwise, this non-fusible switch must be replaced with an Eaton fusible switch that uses the appropriate fusing required. Molded-case circuit breaker protection of non-fusible Eaton switches for applications that require a short-circuit rating of greater than 10,000 rms symmetrical amperes has been evaluated and is summarized below. Refer to the reference tables for typical Eaton fusible switch UL listed short-circuit ratings.

UL Recognized Safety Switch/Circuit Breaker Series-Connected Ratings

Safety Switch Ampere Rating	Maximum System Voltage AC	Circuit Breaker Maximum Short-Circuit Rating (rms Symmetrical)	Circuit Breaker Frame(s)
30 and 60	600	25,000 18,000 14,000	FDC, HFD, HFDE, EGH FD, EGE FDB
100	600	25,000 18,000 14,000	FDC, HFD, HFDE, EGH FD, EGE FDB
	480	35,000	EGH, EGS
200	600	25,000 18,000 14,000	FDC, HFD, HFDE, HJD, JGH FD, JD, JGE FDB
	480	65,000	HFD, HFDE, HJD, JGH

Product Enhancement

Eaton non-fusible safety switches, per table below, within the noted ampere ratings, now carry series combination short-circuit ratings as shown when combined with the identified MCCB or fuse type. With this listed rating, the safety switch shown in the one-line diagram, can be correctly applied **when the motor feeder Eaton HMCP circuit breaker is replaced with an Eaton molded-case circuit breaker** properly sized for the motor hp rating. This is a significant enhancement to the product's performance rating. To achieve these ratings, the switches have been tested in combination with all of the overcurrent devices shown. Furthermore, the applicable combination ratings are marked on the inside of the switch door, ensuring inspector approval.

One-Line Diagram

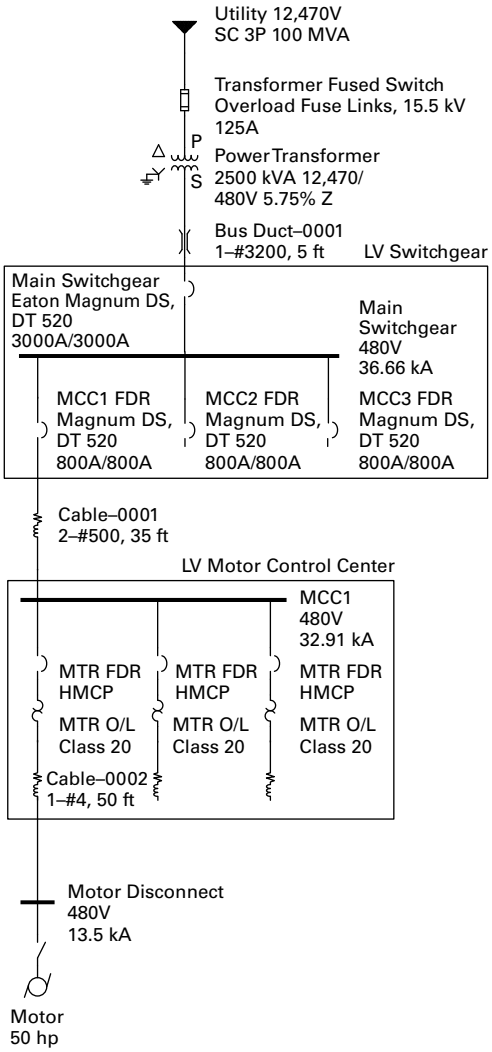

Information and Application

The circuit breaker or fuse rating is not to exceed the ampere rating of the non-fusible switch. When used on systems with greater than 10 kA short-circuit rating available, the UL Listed short-circuit rating of the non-fusible switch is based upon the switch being used in combination with fuses or molded-case circuit breakers identified in the table below.

Non-Fusible Safety Switches

Eaton Non-Fusible Safety Switch Ampere Rating ①	Maximum System Voltage AC	Maximum Short-Circuit Rating	Upstream Device ② Fuse Class	Upstream Device ② Breaker Frame
30 and 60	600	10,000	H, K	Any circuit breaker
		14,000		FDB
		18,000		FD, EGE
		25,000		FDC, HFD, HFDE, EGH
		200,000	R, T, J, L	
100	480	10,000	H, K	Any circuit breaker
		35,000		EGH, EGS
		200,000	R, T, J, L	
	600	10,000	H, K	Any circuit breaker
		14,000		FDB
		18,000		FD, EGE
		25,000		FDC, HFD, HFDE, EGH
		200,000 ③	R, T, J, L	
200	480	10,000	H, K	Any circuit breaker
		65,000		HFD, HFDE, HJD, JGH
		200,000	R, T, J, L	
	600	10,000	H, K	Any circuit breaker
		14,000		FDB
		18,000		FD, JD, JGE
		25,000		FDC, HFD, HFDE, HJD, JGH
		200,000	R, T, J, L	

Notes

① For use on NEMA 1, 3R, 12/3R and 4X switches.
② Fuse or circuit breaker rating is not to exceed switch rating.
③ NEMA 12, 4/4X only. NEMA 1, 3R are 100 kAIC at 600 Vac.

1

Dimensions

Typical Fuse Dimensions in Inches

Note: For typical fuse dimensions in millimeters, see **Page V2-T1-25**.

Class T

T-Tron™ Fuses
JJN **(300V)** JJS **(600V)**

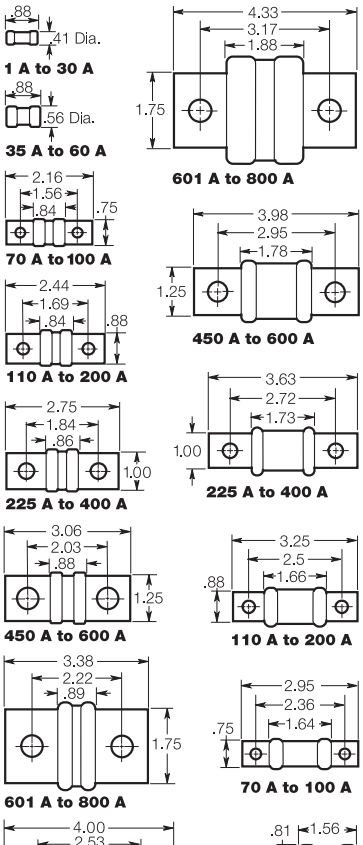

Class J

Low-Peak® and Limitron® Fuses
LPJ & JKS **(600V)**

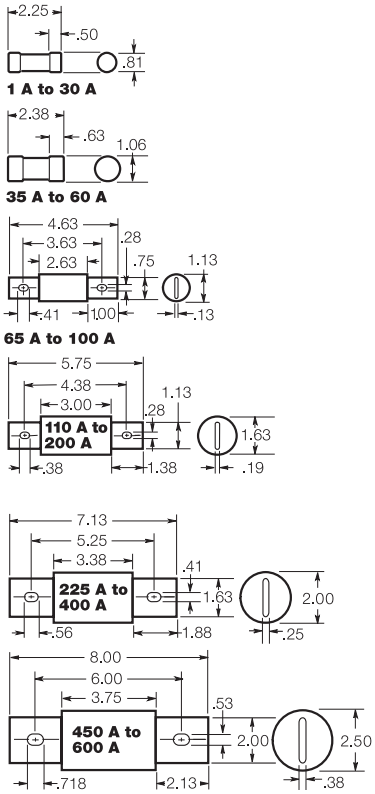

Class RK5 and RK1, Class H

(Dimensions Apply)

Fusetron®, Low-Peak and Limitron Fuses (250 and 600V)
FRN-R and FRS-R; LPN-RK and LPS-RK; KTN-R and KTS-R

Basic dimensions are same as Class H (formerly NEC) ONE-TIME (NON and NOS) and SUPERLAG Renewable RES and REN fuses.

Note: These fuses can be used to replace existing Class H, RK1 and RK5 fuses relating to dimensional compatibility.

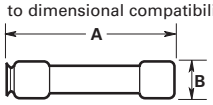

	250V		600V	
Ampere	**A**	**B**	**A**	**B**
1/10–30	2.00	0.56	5.00	0.81
35–60	3.00	0.81	5.50	1.06

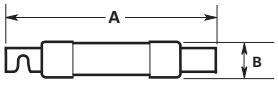

Fusetron and Limitron

	250V		600V	
Ampere	**A**	**B**	**A**	**B**
70–100	5.88	1.06	7.88	1.34
110–200	7.13	1.56	9.63	1.84
225–400	8.63	2.06	11.63	2.59
450–600	10.38	2.59	13.38	3.13

Low-Peak

	250V		600V	
Ampere	**A**	**B**	**A**	**B**
70–100	5.88	1.16	7.88	1.16
110–200	7.13	1.66	9.63	1.66
225–400	8.63	2.38	11.63	2.38
450–600	10.38	2.88	13.38	2.88

Class L Low-Peak and Limitron Fuses

KRP-C, KTU & KLU (601–4000A) **(600V)**

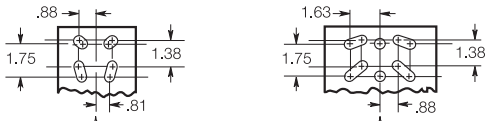

Note: KRP-CL (150–600A) fuses have same dimensions as 601–800A case size. KTU (200–600A) have same dimensions, except tube 3-inch lgth. x 2-inch dia.; terminal 1.63-inch width x 1.25-inch thick.

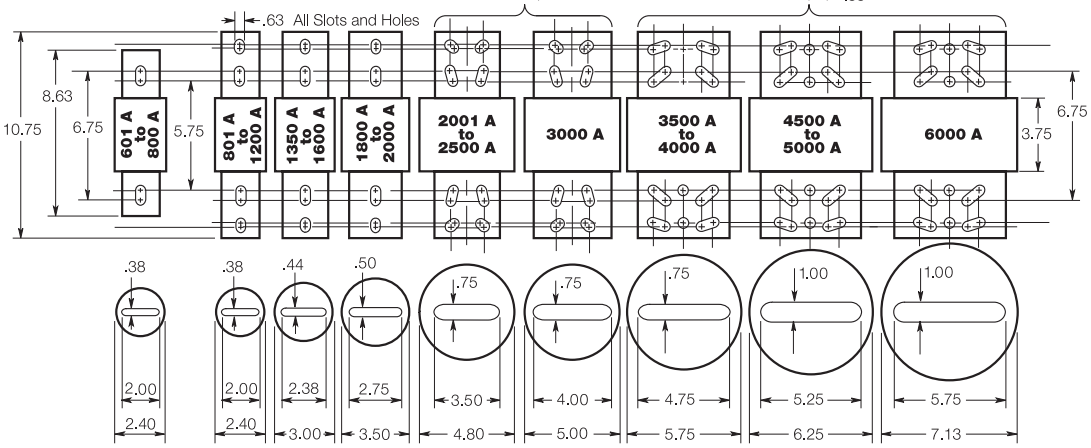

Typical Fuse Dimensions in Millimeters

Class T

T-Tron Fuses
JJN **(300V)** JJS **(600V)**

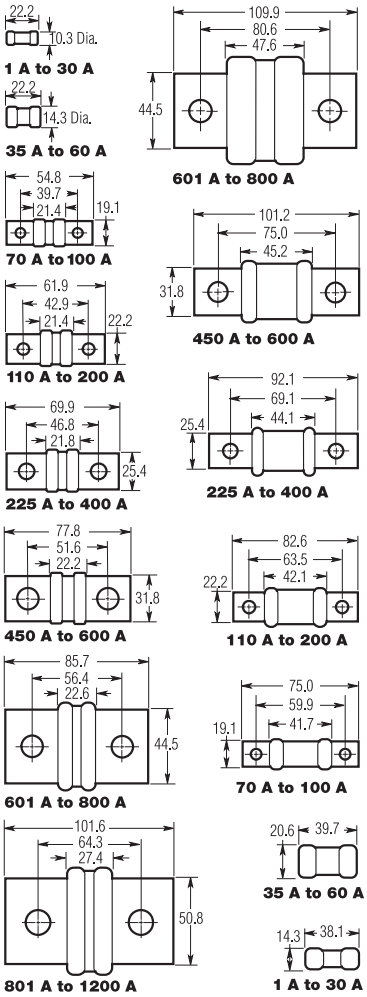

Class J

Low-Peak and Limitron Fuses
LPJ and JKS **(600V)**

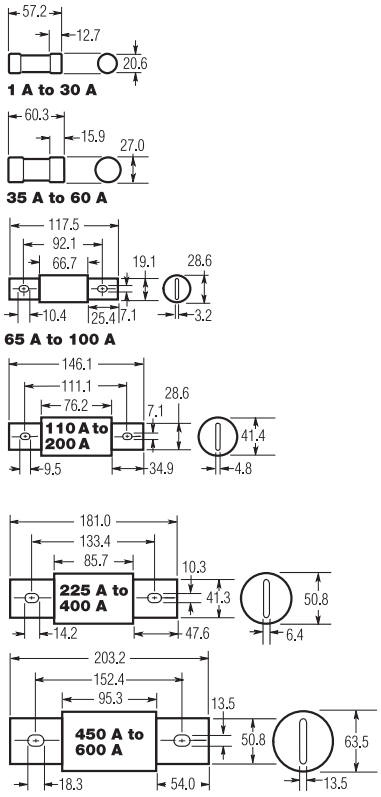

Fusetron, Low-Peak and Limitron Fuses (250 and 600V)

FRN-R and FRS-R; LPN-RK and LPS-RK; KTN-R and KTS-R

Basic dimensions are same as Class H (formerly NEC) ONE-TIME (NON and NOS) and SUPERLAG Renewable RES and REN fuses.

Note: These fuses can be used to replace existing Class H, RK1 and RK5 fuses relating to dimensional compatibility.

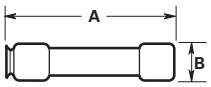

	250V		600V	
Ampere	**A**	**B**	**A**	**B**
1/10–30	50.8	14.3	127.0	20.6
35–60	76.2	20.6	139.7	27.0

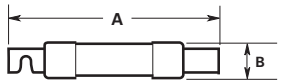

Fusetron and Limitron

	250V		600V	
Ampere	**A**	**B**	**A**	**B**
70–100	149.2	26.9	200.0	34.0
110–200	181.0	39.6	244.5	46.7
225–400	219.1	52.3	295.3	65.8
450–600	263.5	65.8	339.7	79.5

Low-Peak

	250V		600V	
Ampere	**A**	**B**	**A**	**B**
70–100	149.2	29.5	200.0	29.5
110–200	181.0	42.2	244.5	42.2
225–400	219.1	60.5	295.3	60.5
450–600	263.5	73.2	339.7	73.2

Class L Low-Peak and Limitron Fuses

KRP-C, KTU and KLU (601–4000A) **(600V)**

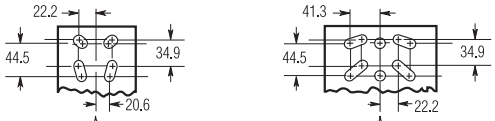

Note: KRP-CL (150–600A) fuses have same dimensions as 601–800A case size. KTU (200–600A) have same dimensions, except tube 76.2 mm lgth. x 50.8 mm dia.; terminal 41.3 mm width x 31.8 mm thick.

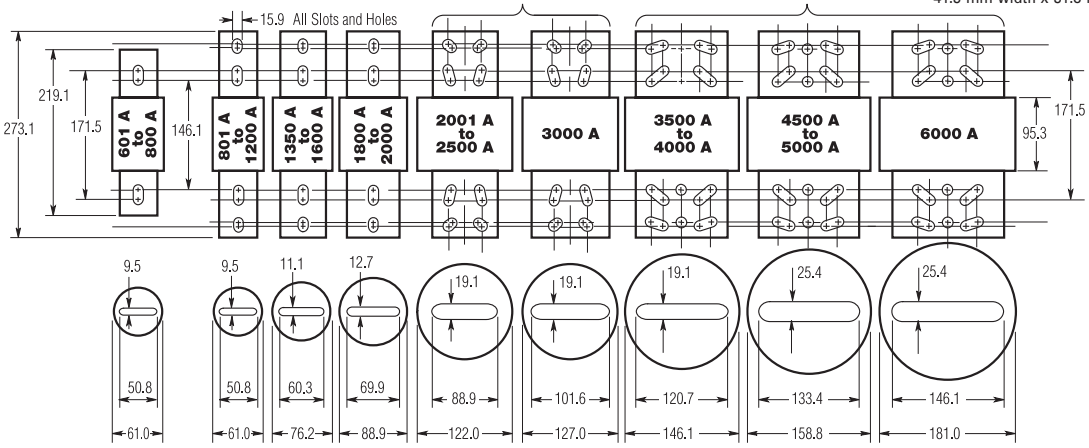

Cartridge Fuse General-Duty Safety Switch

Contents

Description	*Page*
Product Overview	**V2-T1-3**
General Duty	**V2-T1-26**
Standards and Certifications	**V2-T1-27**
Product Selection	**V2-T1-28**
Dimensions	**V2-T1-30**
Heavy-Duty	**V2-T1-31**
Six-Pole Switches	**V2-T1-43**
Double-Throw Switches	**V2-T1-45**
EnviroLine—Stainless Steel Switch	**V2-T1-53**
EnviroLine—Upper and Lower Window Switches	**V2-T1-56**
EnviroLine—Receptacle Switches	**V2-T1-59**
EnviroLine—Non-Metallic KRYDON Switch	**V2-T1-61**
Shunt Trip Safety SwitchShunt Trip Safety Switch	**V2-T1-63**
NEMA 7/9—Hazardous Location Disconnect Switch	**V2-T1-66**
Quick Connect Switches	**V2-T1-68**
Solar Disconnect Switch	**V2-T1-70**
316-Grade Stainless Steel Safety Switches	**V2-T1-72**
Mill-Duty Rated, Heavy-Duty, Fusible, Non-Fusible, Single-Throw	**V2-T1-76**
Heavy-Duty Fusible Safety Switches Accepting Cube Fuses	**V2-T1-78**
Elevator Control Switch	**V2-T1-81**
Auxiliary Power Heavy-Duty Safety Switch	**V2-T1-83**
Left-Handed Safety Switch	**V2-T1-86**
200% Neutral Safety Switches	**V2-T1-87**
Pringle Bolted Pressure Switch	**V2-T1-88**
Type DS, Fusible and Non-Fusible	**V2-T1-91**
Type Visi-Flex DE-ION	**V2-T1-94**
Flange Mounted—Variable Depth	**V2-T1-98**
Flange Mounted—Fixed Depth	**V2-T1-102**

General Duty

Product Description

- 30–600A
- Suitable for service entrance applications unless otherwise noted
- Fusible and non-fusible switches are 100% load break and 100% load make rated
- The continuous load current of fusible switches is not to exceed 80% of the rating of fuses employed in other than motor circuits. Non-fusible switches are 100% fully rated
- 200–600A features K-Series design
- Horsepower rated
- Fusible and non-fusible switches. Single-pole S/N through four-wire; 120/240, and 240 Vac
- With Class R fuses, switches may be used on systems capable of delivering 100,000A rms symmetrical

Note: Plug fuse switches are not service entrance rated.

- Bolt-on hub provision. Provided for general-duty switches in a NEMA 3R enclosure. See **Page V2-T1-15** for selection

Application Description

For residential and commercial applications. Suitable for light-duty motor circuits and service entrance.

Features, Benefits and Functions

General-Duty (Cartridge Fuse)

- Ample wire bending space provides for easier installation
- Visible double-break quick-make, quick-break rotary blade mechanism
- Side opening door on all enclosures
- Mechanically interlocked cover to prevent easy access when the switch is in the ON position
- With Class R fuses, switches may be used on systems capable of delivering 100,000A rms symmetrical
- Clearly visible and accessible neutral where applicable
- Visible ON/OFF indication
- Tangential knockouts on 30–60A designs
- Ample wiring space
- Double padlocking capability on 30–100A
- Triple padlocking capability on 200–600A
- Additional door locking capability
- Bilingual English/Spanish door label on 30–100A
- Tri-lingual nameplates

All general-duty switches above 100A and all heavy-duty switches incorporate these K-Series switch design features.

- Two points of contact provide a positive open and close, easier operation, and also help prevent contact burning for longer contact life

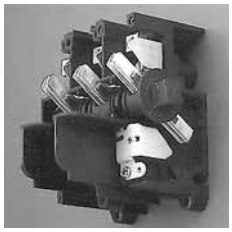

Visible Double-Break Rotary Blade Mechanism

- Protects against accidental contact with energized parts. Probe holes enable the user to test if the line side is energized without removing the shield. Not typically provided on general-duty switches, but available as a field kit or factory installed

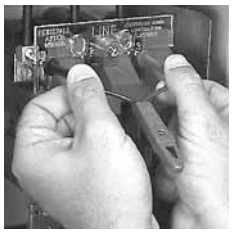

Clear Line Shield

- Provide easy removal of fuses

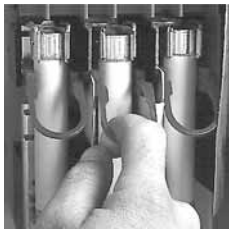

Built-In Fuse Pullers (NEMA 12 and 4X 30–200A Only)

Clearly Visible Handle

- The position (ON or OFF) can be clearly seen from a distance and the length provides for easy operation

Triple Padlocking Capability

- Personnel safety feature because the large hasp can accommodate up to three 3/8-inch (9.5 mm) shank locks

Additional Locking Capability

- Cabinet door can be further padlocked at the top and bottom as applicable

Interlocking Mechanism

- Door cannot be opened when the handle is in the ON position. Front and side operable defeater mechanism provides for user access when necessary on single-throw switches

Tangential Knockouts

- An ample number are provided on the top, bottom and sides of both NEMA Types 1 and 3R enclosures through 200A

Bolt-On Hub Kits

- For switches in a NEMA Type 3R, 30–200A. Use a Myers type hub for all others

Standards and Certifications

- UL listed File No. E5239
- Meets UL 98 for enclosed switches and NEMA Std. KS-1

Listed

1 **Product Selection**

120/240 Vac General-Duty, Fusible, Single-Throw

DP221NGB

System	Ampere Rating	Fuse Type Provision	Maximum Horsepower Ratings ① Single-Phase AC 120V	Single-Phase AC 240V	Three-Phase AC 240V	DC 250V	NEMA 1 Enclosure Indoor Catalog Number	NEMA 3R Enclosure Rainproof Catalog Number
Plug Type—Two-Wire (One Blade, One Fuse, S/N)—120 Vac ②								
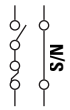	30	Plug (Type S, T or W)	1/2–2	—	—	—	**DP111NGB** ②	—
Plug Type—Three-Wire (Two Blades, Two Fuses, S/N)—120/240 Vac								
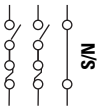	30	Plug (Type S, T or W)	1/2–2	1-1/2–3	—	—	**DP221NGB** ②	Use cartridge-type fuse catalog number **DG221NRB** ②
Cartridge Type—Two-Pole Two-Wire (Two Blades, Two Fuses)—240 Vac								
	30	—	—	1-1/2–3	3–7-1/2	—	③	③
	60	—	—	3–10	7-1/2–15	—	③	③
	100	—	—	7-1/2–15	15–30	—	③	③
	200	H	—	15	25–60	—	**DG224FGK** ④⑤	**DG224FRK** ④⑤
	400	H	—	—	50–125	—	**DG225FGK** ④⑤	**DG225FRK** ④⑤
	600	H	—	—	75–200	—	**DG226FGK** ④⑤	**DG226FRK** ④⑤
Cartridge Type—Three-Wire (Two Blades, Two Fuses, S/N)—120/240 Vac								
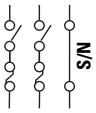	30	H	—	1-1/2–3	3–7-1/2 ⑥	—	**DG221NGB** ②	**DG221NRB** ②
	60	H	—	3–10	7-1/2–15 ⑥	—	**DG222NGB** ②	**DG222NRB** ②
	100	H	—	7-1/2–15	15–30 ⑥	—	**DG223NGB** ②	**DG223NRB** ②
	200	H	—	15	25–60 ⑥	—	**DG224NGK**	**DG224NRK**
	400	H	—	—	50–125 ⑥	50	**DG225NGK**	**DG225NRK**
	600	H	—	—	75–200 ⑥	—	**DG226NGK**	**DG226NRK**

Notes

① Maximum hp ratings apply only when dual element time delay fuses are used.
② These switches do not have an interlock that prevents door from being opened when switch is in the ON position.
③ Use three-wire catalog numbers below.
④ Solid neutral bars are not included. Order separately from table on **Page V2-T1-14**.
⑤ **WARNING!** Switch is not approved for service entrance unless a neutral kit is installed.
⑥ Grounded B phase rating, UL listed.

All general-duty safety switches are individually packaged.

Accessories are limited in scope on general-duty safety switches. See **Page V2-T1-14** for availability. In addition, clear line shields are available as an accessory on 200–600A general-duty switches. Catalog Numbers: 200A = 70-7759-11, 400A = 70-8063-8, 600A = 70-8064-8.

DG321NRB

120/240 Vac General-Duty, Fusible, Single-Throw, continued

System	Ampere Rating	Fuse Type Provision	Maximum Horsepower Ratings ① Single-Phase AC 120V	Single-Phase AC 240V	Three-Phase AC 240V	DC 250V	NEMA 1 Enclosure Indoor Catalog Number	NEMA 3R Enclosure Rainproof Catalog Number
Cartridge Type—Three-Pole, Three-Wire (Three Blades, Three Fuses)—240 Vac								
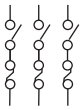	30	—	—	—	—	—	②	②
	60	—	—	—	—	—	②	②
	100	—	—	—	—	—	②	②
	200	H	—	15	25–60	—	**DG324FGK** ③④	②
	400	H	—	—	50–125	—	**DG325FGK** ③④	**DG325FRK** ③④
	600	H	—	—	75–200	—	**DG326FGK** ③④	**DG326FRK** ③④
Cartridge Type—Four-Wire (Three Blades, Three Fuses, S/N)—120/240 Vac								
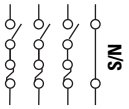	30	H	—	1-1/2–3	3–7-1/2	—	**DG321NGB** ⑤	**DG321NRB** ⑤
	60	H	—	3–10	7-1/2–15	—	**DG322NGB** ⑤	**DG322NRB** ⑤
	100	H	—	7-1/2–15	15–30	—	**DG323NGB** ⑤	**DG323NRB** ⑤
	200	H	—	15	25–60	—	**DG324NGK**	**DG324NRK**
	400	H	—	—	50–125	—	**DG325NGK**	**DG325NRK**
	600	H	—	—	75–200	—	**DG326NGK**	**DG326NRK**

DG322URB

120/240 Vac General-Duty, Non-Fusible, Single-Throw

System	Ampere Rating	Maximum Horsepower Ratings Single-Phase AC 120V	Single-Phase AC 240V	Three-Phase AC 240V	DC 250V	NEMA 1 Enclosure Indoor Catalog Number	NEMA 3R Enclosure Rainproof Catalog Number
Two-Pole, Two-Wire (Two Blades)—240 Vac							
	30	2	3	—	—	**DG221UGB** ④⑤	**DG221URB** ④⑤
	60	3	10	—	—	**DG222UGB** ④⑤	**DG222URB** ④⑤
	100	—	15	—	—	**DG223UGB** ④⑤	**DG223URB** ④⑤
	200	—	15	—	—	④⑥	**DG224URK** ④
Three-Pole, Three-Wire (Three Blades)—240 Vac							
	30	2	3	7-1/2	—	**DG321UGB** ④⑤	**DG321URB** ④⑤
	60	3	10	15	—	**DG322UGB** ④⑤	**DG322URB** ④⑤
	100	—	15	30	—	**DG323UGB** ④⑤	**DG323URB** ④⑤
	200	—	15	60	—	**DG324UGK** ④	**DG324URK** ④
	400	—	—	125	—	**DG325UGK** ⑦	**DG325URK** ⑦
	600	—	—	200	—	**DG326UGK** ⑦	**DG326URK** ⑦

Notes

① Maximum hp ratings apply only when dual element time delay fuses are used.
② Use four-wire catalog numbers below.
③ Solid neutral bars are not included. Order separately from table on **Page V2-T1-14**.
④ **WARNING!** Switch is not approved for service entrance unless a neutral kit is installed.
⑤ These switches do not have an interlock that prevents door from being opened when switch is in the ON position.
⑥ Use three-wire catalog numbers below.
⑦ Drilled to accept field installed neutral kits.

All general-duty safety switches are individually packaged.

Accessories are limited in scope on general-duty safety switches. See **Page V2-T1-14** for availability. In addition, clear line shields are available as an accessory on 200–600A general-duty switches. Catalog Numbers: 200A = 70-7759-11, 400A = 70-8063-8, 600A = 70-8064-8.

1

Dimensions

Approximate Dimensions in Inches (mm)

Plug Fuse, 120, 120/240V, Single-, Two-Pole Solid Neutral, Single-Throw

Ampere Rating	NEMA 1 Height	Width	Depth
30	6.88 (174.8)	4.94 (125.5)	3.44 (87.4)

General-Duty, Non-Fusible, 240V, Three-Pole, Single-Throw ①

Ampere Rating	Width (W)	Height (H)	Depth (D)	Depth (D2)	Weight Lbs (kg)
NEMA 1					
30	6.38 (162.1)	10.69 (271.5)	6.88 (174.8)	3.75 (95.2)	6 (2.724)
60	8.69 (220.7)	14.19 (360.4)	7.38 (187.5)	4.21 (106.9)	9 (4.086)
100	9.13 (231.9)	18.81 (477.8)	7.38 (187.5)	4.23 (107.4)	12 (5.448)
200	16.00 (406.4)	24.75 (628.7)	11.25 (285.8)	6.14 (156.0)	48 (21.792)
400	23.00 (584.2)	44.75 (1136.7)	12.63 (320.8)	7.27 (184.7)	100 (45.4)
600	24.00 (609.6)	52.25 (1327.2)	14.25 (362.0)	8.95 (227.3)	130 (59.02)
NEMA 3R					
30	6.38 (162.1)	10.81 (274.6)	6.88 (174.8)	3.75 (95.2)	6 (2.724)
60	8.69 (220.7)	14.38 (365.3)	7.38 (187.5)	4.21 (106.9)	9 (4.086)
100	9.13 (231.9)	19.25 (489.0)	7.38 (187.5)	4.23 (107.4)	12 (5.448)
200	16.00 (406.4)	25.50 (647.7)	11.25 (285.8)	6.14 (156.0)	55 (24.97)
400	23.00 (584.2)	45.19 (1147.8)	12.63 (320.8)	7.27 (184.7)	105 (47.67)
600	24.00 (609.6)	52.70 (1338.6)	14.25 (362.0)	8.95 (227.3)	135 (61.29)

General-Duty, Fusible, 240V, Three-Pole Solid Neutral, Single-Throw ①

Ampere Rating	Width (W)	Height (H)	Depth (D)	Depth (D2)	Weight Lbs (kg)
NEMA 1					
30	6.38 (162.1)	10.69 (271.5)	6.88 (174.8)	3.75 (95.2)	6 (2.724)
60	8.69 (220.7)	14.19 (360.4)	7.38 (187.5)	4.21 (106.9)	10 (4.54)
100	9.13 (231.9)	18.81 (477.8)	7.38 (187.5)	4.23 (107.4)	14 (6.356)
200	16.00 (406.4)	24.75 (628.7)	11.25 (285.8)	6.14 (156.0)	48 (21.792)
400	23.00 (584.2)	44.75 (1136.7)	12.63 (320.8)	7.27 (184.7)	110 (49.94)
600	24.00 (609.6)	52.25 (1327.2)	14.25 (362.0)	8.95 (227.3)	145 (65.83)
NEMA 3R					
30	6.38 (162.1)	10.81 (274.6)	6.88 (174.8)	3.75 (95.2)	6 (2.724)
60	8.69 (220.7)	14.38 (365.3)	7.38 (187.5)	4.21 (106.9)	10 (4.54)
100	9.13 (231.9)	19.25 (489.0)	7.38 (187.5)	4.23 (107.4)	14 (6.356)
200	16.00 (406.4)	25.50 (647.7)	11.25 (285.8)	6.14 (156.0)	55 (24.97)
400	23.00 (584.2)	45.19 (1147.8)	12.63 (320.8)	7.27 (184.7)	115 (52.21)
600	24.00 (609.6)	52.70 (1338.6)	14.25 (362.0)	8.95 (227.3)	150 (68.1)

NEMA 1-3R 30–100A General-Duty Non-Fusible and Fusible Single-Throw ②

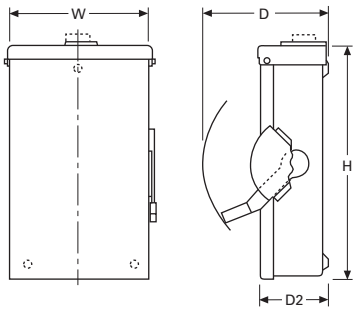

NEMA 1-3R 200–600A General-Duty Non-Fusible and Fusible Single-Throw

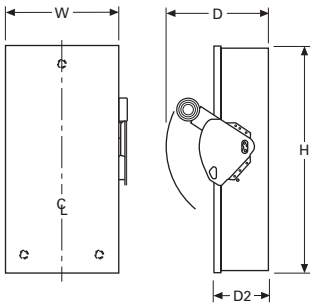

Notes

① Dimensions are for estimating purposes only.

② Figure is not applicable to plug fuse.

Heavy-Duty Safety Switch

Contents

Description	*Page*
Product Overview	**V2-T1-3**
General Duty	**V2-T1-26**
Heavy-Duty	
Standards and Certifications	**V2-T1-32**
Product Selection	**V2-T1-33**
Dimensions	**V2-T1-42**
Six-Pole Switches	**V2-T1-43**
Double-Throw Switches	**V2-T1-45**
EnviroLine—Stainless Steel Switch	**V2-T1-53**
EnviroLine—Upper and Lower Window Switches	**V2-T1-56**
EnviroLine—Receptacle Switches	**V2-T1-59**
EnviroLine—Non-Metallic KRYDON Switch	**V2-T1-61**
Shunt Trip Safety Switch	**V2-T1-63**
NEMA 7/9—Hazardous Location Disconnect Switch	**V2-T1-66**
Quick Connect Switches	**V2-T1-68**
Solar Disconnect Switch	**V2-T1-70**
316-Grade Stainless Steel Safety Switches	**V2-T1-72**
Mill-Duty Rated, Heavy-Duty, Fusible, Non-Fusible, Single-Throw	**V2-T1-76**
Heavy-Duty Fusible Safety Switches Accepting Cube Fuses	**V2-T1-78**
Elevator Control Switch	**V2-T1-81**
Auxiliary Power Heavy-Duty Safety Switch	**V2-T1-83**
Left-Handed Safety Switch	**V2-T1-86**
200% Neutral Safety Switches	**V2-T1-87**
Pringle Bolted Pressure Switch	**V2-T1-88**
Type DS, Fusible and Non-Fusible	**V2-T1-91**
Type Visi-Flex DE-ION	**V2-T1-94**
Flange Mounted—Variable Depth	**V2-T1-98**
Flange Mounted—Fixed Depth	**V2-T1-102**

Heavy-Duty

Product Description

- 30–1200A
- 600 Vac, 600 Vdc maximum
- Horsepower rated
- Fusible and non-fusible switches are 100% load break and 100% load make rated
- The continuous load current of fusible switches is not to exceed 80% of the rating of fuses employed in other than motor circuits. Non-fusible switches are 100% fully rated
- Suitable for service entrance applications unless otherwise noted
- For factory modifications, refer to **Pages V2-T1-16** through **V2-T1-19**

Application Description

For heavy commercial and industrial applications where reliable performance and service continuity are critical.

For the toughest heavy commercial and industrial applications, refer to **Page V2-T1-76** for catalog information on our mill-duty safety switch

Features, Benefits and Functions

- Deionizing arc chutes; arc chutes confine and suppress the arcs produced by opening contacts under load
- Mechanically interlocked cover to prevent easy access when the switch is in the ON position
- Clearly visible palm fitting red handle
- Complete accessory and renewal parts data shown on inner door label.
- 30–800A NEMA 12 designs convertible to NEMA 3R by opening factory-installed drain hole
- 30–1200A switches are seismic qualified and exceed the requirements of the Uniform Building Code® (UBC) and California Code Title 24
- Tri-lingual nameplates

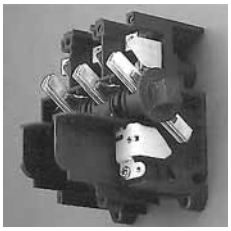

Visible Double-Break Rotary Blade Mechanism

- Two points of contact provide a positive open and close, easier operation, and also help prevent contact burning for longer contact life

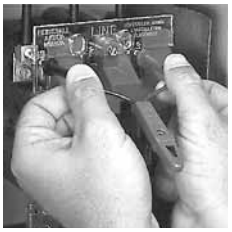

Clear Line Shield

- Protects against accidental contact with energized parts. Probe holes enable the user to test if the line side is energized without removing the shield. Not typically provided on general-duty switches, but available as a field kit or factory installed

Built-In Fuse Pullers (NEMA 12 and 4X 30–200A Only)

- Provide easy removal of fuses

Clearly Visible Handle

- The position (ON or OFF) can be clearly seen from a distance and the length provides for easy operation

Triple Padlocking Capability

- Personnel safety feature because the large hasp can accommodate up to three 3/8-inch (9.5 mm) shank locks

Additional Locking Capability

- Cabinet door can be further padlocked at the top and bottom as applicable

Interlocking Mechanism

- Door cannot be opened when the handle is in the ON position. Front and side operable defeater mechanism provides for user access when necessary on single-throw switches

Tangential Knockouts

- An ample number are provided on the top, bottom and sides of both NEMA Types 1 and 3R enclosures through 200A

Bolt-On Hub Kits

- For switches in a NEMA Type 3R, 30–200A. Use a Myers type hub for all others

Standards and Certifications

- UL listed File No. E5239
- Meets UL 98 for enclosed switches and NEMA Std. KS-1

Listed

Product Selection

DH221NRK

240 Vac Heavy-Duty, Fusible, Single-Throw, Fusible—NEMA 1, 3R

System	Ampere Rating	Fuse Type Provision	Maximum Horsepower Ratings AC Standard Fuse Single-Phase	Standard Fuse Three-Phase	Time Delay Single-Phase	Time Delay Three-Phase	DC 250V	NEMA 1 Enclosure Indoor Catalog Number	NEMA 3R Enclosure Rainproof Catalog Number
Two-Pole—240 Vac, 250 Vdc (Suitable for Service Entrance Use with a Neutral Kit Installed)									
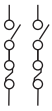	30	H	1-1/2	—	—	—	5	**DH221FGK**	②
	60	—	—	—	—	—	—	②	②
	100	—	—	—	—	—	—	②	②
	200	—	—	—	—	—	—	②	②
	400	H	—	50 ①	—	125 ①	50	**DH225FGK**	**DH225FRK**
	600	H	—	75 ①	—	200 ①	—	**DH226FGK**	**DH226FRK**
	800	L	—	100 ①	—	—	—	**DH227FGK**	—
Three-Wire (Two Blades, Two Fuses, S/N)—240 Vac, 250 Vdc									
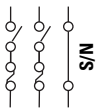	30	H	1-1/2	3 ③	3	7-1/2 ③	5	**DH221NGK**	**DH221NRK**
	60	H	3	7-1/2 ③	10	15 ③	10	**DH222NGK**	**DH222NRK**
	100	H	7-1/2	15 ③	15	30 ③	20	**DH223NGK**	**DH223NRK**
	200	H	15	25 ③	15	60 ③	40	**DH224NGK**	**DH224NRK**
	400	H	—	50 ③	—	125 ③	50	**DH225NGK**	**DH225NRK**
	600	H	—	75 ③	—	200 ③	—	**DH226NGK**	**DH226NRK**
	800	L	—	100 ③	—	—	—	**DH227NGK**	**DH227NRK**
Three-Pole—240 Vac, 250 Vdc (Suitable for Service Entrance Use with a Neutral Kit Installed)									
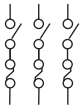	30	H	1-1/2	3	3	7-1/2	5	**DH321FGK**	**DH321FRK**
	60	H	3	7-1/2	10	15	10	**DH322FGK**	**DH322FRK**
	100	H	7-1/2	15	15	30	20	**DH323FGK**	**DH323FRK**
	200	H	15	25	15	60	40	**DH324FGK**	**DH324FRK**
	400	H	—	50	—	125	50	**DH325FGK**	**DH325FRK**
	600	H	—	75	—	200	—	**DH326FGK**	**DH326FRK**
	800	L	—	100	—	—	—	**DH327FGK**	**DH327FRK**
	1200	L	—	—	—	—	—	**DH328FGK**	**DH328FRK**
Four-Wire (Three Blades, Three Fuses, S/N)—240 Vac, 250 Vdc									
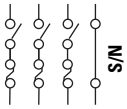	30	H	1-1/2	3	3	7-1/2	5	**DH321NGK**	**DH321NRK**
	60	H	3	7-1/2	10	15	10	**DH322NGK**	**DH322NRK**
	100	H	7-1/2	15	15	30	20	**DH323NGK**	**DH323NRK**
	200	H	15	25	15	60	40	**DH324NGK**	**DH324NRK**
	400	H	—	50	—	125	50	**DH325NGK**	**DH325NRK**
	600	H	—	75	—	200	—	**DH326NGK**	**DH326NRK**
	800	L	—	100	—	—	—	**DH327NGK**	**DH327NRK**
	1200	L	—	—	—	—	—	**DH328NGK**	**DH328NRK**
Four-Pole—240 Vac, 250 Vdc									
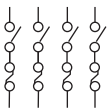	30	H	3	3	10	7-1/2	5	**DH421FGK**	④
	60	H	7-1/2	7-1/2	20	15	10	**DH422FGK**	④
	100	H	15	15	30	30	20	**DH423FGK**	④
	200	H	30	25	50	60	40	**DH424FGK**	④
	400	H	50	50	—	125	50	**DH425FGK**	④⑤
	600	H	—	75	—	200	—	**DH426FGK**	④⑤

Notes

① Horsepower ratings apply only when neutral is field installed and switch is used on a grounded B phase system.
② Use three-pole catalog numbers below.
③ Grounded B phase ratings, UL listed.
④ Use NEMA 12. NEMA 12 enclosures (30–1200A) can be field modified to meet NEMA 3R rainproof requirements when a factory provided drain hole is opened.
⑤ Contact the Safety Switch Flex Center (**1-888-329-9272** or FlexSwitches@eaton.com) for availability of this product.

30A heavy-duty switches with Type J fuse provisions are available from the factory only. See table on **Page V2-T1-18** for catalog numbers.

Suitable for service entrance use, except four-pole switches.

1

240 Vac Heavy-Duty, Fusible, Single-Throw, Fusible—NEMA 12, 4

System	Ampere Rating	Fuse Type Provision	Maximum Horsepower Ratings AC Standard Fuse Single-Phase	Standard Fuse Three-Phase	Time Delay Single-Phase	Time Delay Three-Phase	DC 250V	NEMA 12 Enclosure Industrial, Dust-Tight Catalog Number	NEMA 4 Enclosure Watertight, Painted Steel Catalog Number
Two-Pole—240 Vac, 250 Vdc (Suitable for Service Entrance Use with a Neutral Kit Installed)									
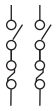	30	H	1-1/2	—	—	—	5	③	—
	60	—	—	—	—	—	—	③	—
	100	—	—	—	—	—	—	③	—
	200	—	—	—	—	—	—	③	—
	400	H	—	50 ①	—	125 ①	50	**DH225FDK** ④	**DH225FPK**
	600	H	—	75 ①	—	200 ①	—	**DH226FDK** ④	**DH226FPK**
	800	L	—	100 ①	—	—	—	**DH227FDK** ④	—
Three-Wire (Two Blades, Two Fuses, S/N)—240 Vac, 250 Vdc									
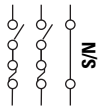	30	H	1-1/2	3 ②	3	7-1/2 ②	5	**DH221NDK** ④	—
	60	H	3	7-1/2 ②	10	15 ②	10	**DH222NDK** ④	—
	100	H	7-1/2	15 ②	15	30 ②	20	**DH223NDK** ④	—
	200	H	15	25 ②	15	60 ②	40	**DH224NDK** ④	—
	400	H	—	50 ②	—	125 ②	50	**DH225NDK** ④	**DH225NPK**
	600	H	—	75 ②	—	200 ②	—	**DH226NDK** ④	**DH226NPK**
	800	L	—	100 ②	—	—	—	**DH227NDK** ④	**DH227NPK**
Three-Pole—240 Vac, 250 Vdc (Suitable for Service Entrance Use with a Neutral Kit Installed)									
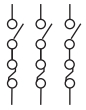	30	H	1-1/2	3	3	7-1/2	5	**DH321FDK** ④	—
	60	H	3	7-1/2	10	15	10	**DH322FDK** ④	—
	100	H	7-1/2	15	15	30	20	**DH323FDK** ④	—
	200	H	15	25	15	60	40	**DH324FDK** ④	—
	400	H	—	50	—	125	50	**DH325FDK** ④	**DH325FPK**
	600	H	—	75	—	200	—	**DH326FDK** ④	**DH326FPK**
	800	L	—	100	—	—	—	**DH327FDK** ④	**DH327FPK**
	1200	L	—	—	—	—	—	**DH328FDK** ④	—
Four-Wire (Three Blades, Three Fuses, S/N)—240 Vac, 250 Vdc									
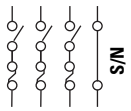	30	H	1-1/2	3	3	7-1/2	5	**DH321NDK** ④	—
	60	H	3	7-1/2	10	15	10	**DH322NDK** ④	—
	100	H	7-1/2	15	15	30	20	**DH323NDK** ④	—
	200	H	15	25	15	60	40	**DH324NDK** ④	—
	400	H	—	50	—	125	50	**DH325NDK** ④	**DH325NPK**
	600	H	—	75	—	200	—	**DH326NDK** ④	**DH326NPK**
	800	L	—	100	—	—	—	**DH327NDK** ④⑤	—
	1200	L	—	—	—	—	—	**DH328NDK** ④	—
Four-Pole—240 Vac, 250 Vdc									
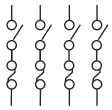	30	H	3	3	10	7-1/2	5	**DH421FDK** ④	—
	60	H	7-1/2	7-1/2	20	15	10	**DH422FDK** ④	—
	100	H	15	15	30	30	20	**DH423FDK** ④	—
	200	H	30	25	50	60	40	**DH424FDK** ④	—
	400	H	50	50	—	125	50	④⑤	—
	600	H	—	75	—	200	—	④⑤	—

Notes

① Horsepower ratings apply only when neutral is field installed and switch is used on a grounded B phase system.
② Grounded B phase ratings, UL listed.
③ Use three-pole catalog numbers below.
④ NEMA 12 enclosures (30–1200A) can be field modified to meet NEMA 3R rainproof requirements when a factory provided drain hole is opened.
⑤ Contact the Safety Switch Flex Center (**1-888-329-9272** or FlexSwitches@eaton.com) for availability of this product.

30A heavy-duty switches with Type J fuse provisions are available from the factory only. See table on **Page V2-T1-18** for catalog numbers.

Suitable for service entrance use, except four-pole switches.

DH322FWK

240 Vac Heavy-Duty, Fusible, Single-Throw, Fusible—NEMA 4X

System	Ampere Rating	Fuse Type Provision	Maximum Horsepower Ratings AC Standard Fuse Single-Phase	Standard Fuse Three-Phase	Time Delay Single-Phase	Time Delay Three-Phase	DC 250V	NEMA 4X Enclosure Corrosion-Resistant, Stainless Steel Catalog Number
Two-Pole—240 Vac, 250 Vdc (Suitable for Service Entrance Use with a Neutral Kit Installed)								
	30	H	1-1/2	—	—	—	5	③
	60	—	—	—	—	—	—	③ or ④
	100	—	—	—	—	—	—	④
	200	—	—	—	—	—	—	④
	400	H	—	50 ①	—	125 ①	50	④
	600	H	—	75 ①	—	200 ①	—	④
	800	L	—	100 ①	—	—	—	④
Three-Wire (Two Blades, Two Fuses, S/N)—240 Vac, 250 Vdc								
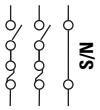	30	H	1-1/2	3 ②	3	7-1/2 ②	5	**DH221NWK**
	60	H	3	7-1/2 ②	10	15 ②	10	**DH222NWK**
	100	H	7-1/2	15 ②	15	30 ②	20	**DH223NWK**
	200	H	15	25 ②	15	60 ②	40	**DH224NWK**
	400	H	—	50 ②	—	125 ②	50	**DH225NWK**
	600	H	—	75 ②	—	200 ②	—	**DH226NWK**
	800	L	—	100 ②	—	—	—	**DH227NWK**
Three-Pole—240 Vac, 250 Vdc (Suitable for Service Entrance Use with a Neutral Kit Installed)								
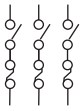	30	H	1-1/2	3	3	7-1/2	5	**DH321FWK**
	60	H	3	7-1/2	10	15	10	**DH322FWK**
	100	H	7-1/2	15	15	30	20	④
	200	H	15	25	15	60	40	**DH324FWK**
	400	H	—	50	—	125	50	**DH325FWK**
	600	H	—	75	—	200	—	**DH326FWK**
	800	L	—	100	—	—	—	**DH327FWK**
	1200	L	—	—	—	—	—	**DH328FWK**
Four-Wire (Three Blades, Three Fuses, S/N)—240 Vac, 250 Vdc								
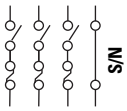	30	H	1-1/2	3	3	7-1/2	5	**DH321NWK**
	60	H	3	7-1/2	10	15	10	**DH322NWK**
	100	H	7-1/2	15	15	30	20	**DH323NWK**
	200	H	15	25	15	60	40	**DH324NWK**
	400	H	—	50	—	125	50	**DH325NWK**
	600	H	—	75	—	200	—	**DH326NWK**
	800	L	—	100	—	—	—	④
	1200	L	—	—	—	—	—	**DH328NWK**
Four-Pole—240 Vac, 250 Vdc								
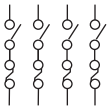	30	H	3	3	10	7-1/2	5	④
	60	H	7-1/2	7-1/2	20	15	10	④
	100	H	15	15	30	30	20	④
	200	H	30	25	50	60	40	④
	400	H	50	50	—	125	50	④
	600	H	—	75	—	200	—	④

Notes

① Horsepower ratings apply only when neutral is field installed and switch is used on a grounded B phase system.
② Grounded B phase ratings, UL listed.
③ Use three-pole catalog numbers below.
④ Contact the Safety Switch Flex Center (**1-888-329-9272** or FlexSwitches@eaton.com) for availability of this product.

30A heavy-duty switches with Type J fuse provisions are available from the factory only. See table on **Page V2-T1-18** for catalog numbers.

Suitable for service entrance use, except four-pole switches.

1

DH362NRK

600 Vac Heavy-Duty, Fusible, Single-Throw, 277/480–600V—NEMA 1, 3R

System	Ampere Rating	Fuse Class Provision	Maximum Horsepower Ratings with Time Delay Fuses: Single-Phase AC 480V	Single-Phase AC 600V	Three-Phase AC 480V	Three-Phase AC 600V	DC 250V	DC 600V	NEMA 1 Enclosure Indoor Catalog Number	NEMA 3R Enclosure Rainproof Catalog Number
Two-Pole—480 Vac—600 Vac or Vdc ① (Suitable for Service Entrance Use with a Neutral Kit Installed)										
	30	H	7-1/2	10	—	—	—	15	**DH261FGK**	**DH261FRK**
	60	H	20	25	—	—	—	25	**DH262FGK**	**DH262FRK**
	100	H	30	40	—	—	20	25	**DH263FGK**	**DH263FRK**
	200	H	50	50	—	—	40	50	**DH264FGK**	**DH264FRK**
	400	H	—	—	—	—	50	—	**DH265FGK**	**DH265FRK**
	600	H	—	—	—	—	50	—	**DH266FGK**	**DH266FRK**
	800	L	—	—	—	—	—	—	**DH267FGK**	**DH267FRK**
	1200	L	—	—	—	—	—	—	②	—
Three-Pole—480 Vac—600 Vac, 250 Vdc (Suitable for Service Entrance Use with a Neutral Kit Installed)										
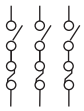	30	H	7-1/2	10	15	20	—	—	**DH361FGK**	**DH361FRK**
	60	H	20	25	30	50	—	—	**DH362FGK**	**DH362FRK**
	100	H	30	40	60	75	—	—	**DH363FGK**	**DH363FRK**
	200	H	50	50	125	150	—	—	**DH364FGK**	**DH364FRK**
	400	H	—	—	250	350	—	—	**DH365FGK**	**DH365FRK**
	600	H	—	—	400	500	—	—	**DH366FGK**	**DH366FRK**
	800	L	—	—	500	500	—	—	**DH367FGK**	**DH367FRK**
	1200	L	—	—	500	500	—	—	**DH368FGK**	**DH368FRK**
Four-Wire (Three Blades, Three Fuses, S/N) 480 Vac—600 Vac, 250 Vdc										
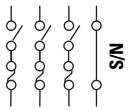	30	H	7-1/2	10	15	20	—	—	**DH361NGK**	**DH361NRK**
	60	H	20	25	30	50	—	—	**DH362NGK**	**DH362NRK**
	100	H	30	40	60	75	—	—	**DH363NGK**	**DH363NRK**
	200	H	50	50	125	150	—	—	**DH364NGK**	**DH364NRK**
	400	H	—	—	250	350	—	—	**DH365NGK**	**DH365NRK**
	600	H	—	—	400	500	—	—	**DH366NGK**	**DH366NRK**
	800	L	—	—	500	500	—	—	**DH367NGK**	**DH367NRK**
	1200	L	—	—	500	500	—	—	**DH368NGK**	**DH368NRK**
Four-Pole—480 Vac—600 Vac, 250 Vdc										
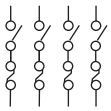	30	H	20 ③	25 ③	15	20	—	—	**DH461FGK**	④
	60	H	40 ③	50 ③	30	50	—	—	**DH462FGK**	④
	100	H	50 ③	50 ③	60	75	—	—	**DH463FGK**	④
	200	H	—	—	125	150	40	—	**DH464FGK**	④
	400	H	—	—	250	350	50	—	**DH465FGK**	②④
	600	H	—	—	400	500	—	—	**DH466FGK**	②④
	800	L	—	—	—	—	—	—	②	②④

Notes

① DC rating for 800A switches is 250V.

② Contact the Safety Switch Flex Center (**1-888-329-9272** or FlexSwitches@eaton.com) for availability of this product.

③ Ratings are for two-phase AC.

④ Use NEMA 12. NEMA 12 enclosures (30–1200A) can be field modified to meet NEMA 3R rainproof requirements when a factory provided drain hole is opened.

30A heavy-duty switches with Type J fuse provisions are available from the factory only. See table on **Page V2-T1-18** for catalog numbers.

Suitable for service entrance use, except 1200A on 480Y/277 or 600Y/347 grounded wye systems, per NEC 215.10 and 230.95, and four-pole switches.

DH361NDK

600 Vac Heavy-Duty, Fusible, Single-Throw, 277/480–600V—NEMA 12, 4

System	Ampere Rating	Fuse Class Provision	Maximum Horsepower Ratings with Time Delay Fuses: Single-Phase AC 480V	Single-Phase AC 600V	Three-Phase AC 480V	Three-Phase AC 600V	DC 250V	DC 600V	NEMA 12 Enclosure Industrial, Dust-Tight Catalog Number	NEMA 4 Enclosure Watertight, Painted Steel Catalog Number
Two-Pole—480 Vac—600 Vac or Vdc ① (Suitable for Service Entrance Use with a Neutral Kit Installed)										
	30	H	7-1/2	10	—	—	—	15	**DH261FDK** ②	—
	60	H	20	25	—	—	—	25	**DH262FDK** ②	—
	100	H	30	40	—	—	20	—	**DH263FDK** ②	—
	200	H	50	50	—	—	—	50	**DH264FDK** ②	—
	400	H	—	—	—	—	50	—	**DH265FDK** ②	④
	600	H	—	—	—	—	—	—	**DH266FDK** ②	④
	800	L	—	—	—	—	—	—	**DH267FDK** ②	④
	1200	L	—	—	—	—	—	—	③	—
Three-Pole—480 Vac—600 Vac, 250 Vdc (Suitable for Service Entrance Use with a Neutral Kit Installed)										
	30	H	7-1/2	10	15	20	—	—	**DH361FDK** ②	—
	60	H	20	25	30	50	—	—	**DH362FDK** ②	—
	100	H	30	40	60	75	—	—	**DH363FDK** ②	—
	200	H	50	50	125	150	—	—	**DH364FDK** ②	—
	400	H	—	—	250	350	—	—	**DH365FDK** ②	**DH365FPK**
	600	H	—	—	400	500	—	—	**DH366FDK** ②	**DH366FPK**
	800	L	—	—	500	500	—	—	**DH367FDK** ②	**DH367FPK**
	1200	L	—	—	500	500	—	—	**DH368FDK**	—
Four-Wire (Three Blades, Three Fuses, S/N) 480 Vac—600 Vac, 250 Vdc										
	30	H	7-1/2	10	15	20	—	—	**DH361NDK** ②	—
	60	H	20	25	30	50	—	—	**DH362NDK** ②	—
	100	H	30	40	60	75	—	—	**DH363NDK** ②	—
	200	H	50	50	125	150	—	—	**DH364NDK** ②	—
	400	H	—	—	250	350	—	—	**DH365NDK** ②	**DH365NPK**
	600	H	—	—	400	500	—	—	**DH366NDK** ②	**DH366NPK**
	800	L	—	—	500	500	—	—	②③	—
	1200	L	—	—	500	500	—	—	**DH368NDK**	—
Four-Pole—480 Vac—600 Vac, 250 Vdc										
	30	H	20 ⑤	25 ⑤	15	20	—	—	②③	—
	60	H	40 ⑤	50 ⑤	30	50	—	—	②③	—
	100	H	50 ⑤	50 ⑤	60	75	—	—	**DH463FDK** ②	—
	200	H	—	—	125	150	40	—	**DH464FDK** ②	—
	400	H	—	—	250	350	50	—	②③	—
	600	H	—	—	400	500	—	—	②③	—
	800	L	—	—	—	—	—	—	②③	—

Notes

① DC rating for 800A switches is 250V.
② Use NEMA 12. NEMA 12 enclosures (30–1200A) can be field modified to meet NEMA 3R rainproof requirements when a factory provided drain hole is opened.
③ Contact the Safety Switch Flex Center (**1-888-329-9272** or FlexSwitches@eaton.com) for availability of this product.
④ Use three-pole catalog numbers below for 600 Vac, 250 Vdc maximum applications.
⑤ Ratings are for two-phase AC.

30A heavy-duty switches with Type J fuse provisions are available from the factory only. See table on **Page V2-T1-18** for catalog numbers.
Suitable for service entrance use, except 1200A on 480Y/277 or 600Y/347 grounded wye systems, per NEC 215.10 and 230.95, and four-pole switches.

1

600 Vac Heavy-Duty, Fusible, Single-Throw, 277/480–600V—NEMA 4X

System	Ampere Rating	Fuse Class Provision	Maximum Horsepower Ratings with Time Delay Fuses: Single-Phase AC 480V	Single-Phase AC 600V	Three-Phase AC 480V	Three-Phase AC 600V	DC 250V	DC 600V	NEMA 4X Enclosure Corrosion-Resistant, Stainless Steel Catalog Number
Two-Pole—480 Vac—600 Vac or Vdc ① (Suitable for Service Entrance Use with a Neutral Kit Installed)									
	30	H	7-1/2	10	—	—	—	15	**DH261FWK**
	60	H	20	25	—	—	—	25	② or ③
	100	H	30	40	—	—	20	—	② or ③
	200	H	50	50	—	—	—	50	**DH264FWK**
	400	H	—	—	—	—	50	—	② or ③
	600	H	—	—	—	—	—	—	② or ③
	800	L	—	—	—	—	—	—	② or ③
	1200	L	—	—	—	—	—	—	③
Three-Pole—480 Vac—600 Vac, 250 Vdc (Suitable for Service Entrance Use with a Neutral Kit Installed)									
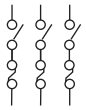	30	H	7-1/2	10	15	20	—	—	**DH361FWK**
	60	H	20	25	30	50	—	—	**DH362FWK**
	100	H	30	40	60	75	—	—	**DH363FWK**
	200	H	50	50	125	150	—	—	**DH364FWK**
	400	H	—	—	250	350	—	—	**DH365FWK**
	600	H	—	—	400	500	—	—	**DH366FWK**
	800	L	—	—	500	500	—	—	**DH367FWK**
	1200	L	—	—	500	500	—	—	**DH368FWK**
Four-Wire (Three Blades, Three Fuses, S/N) 480 Vac—600 Vac, 250 Vdc									
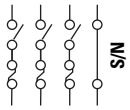	30	H	7-1/2	10	15	20	—	—	**DH361NWK**
	60	H	20	25	30	50	—	—	**DH362NWK**
	100	H	30	40	60	75	—	—	**DH363NWK**
	200	H	50	50	125	150	—	—	**DH364NWK**
	400	H	—	—	250	350	—	—	**DH365NWK**
	600	H	—	—	400	500	—	—	**DH366NWK**
	800	L	—	—	500	500	—	—	**DH367NWK** ②
	1200	L	—	—	500	500	—	—	**DH368NWK**
Four-Pole—480 Vac—600 Vac, 250 Vdc									
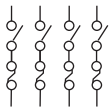	30	H	20 ④	25 ④	15	20	—	—	②
	60	H	40 ④	50 ④	30	50	—	—	②
	100	H	50 ④	50 ④	60	75	—	—	②
	200	H	—	—	125	150	40	—	②
	400	H	—	—	250	350	50	—	②
	600	H	—	—	400	500	—	—	②
	800	L	—	—	—	—	—	—	②

Notes

① DC rating for 800A switches is 250V.
② Contact the Safety Switch Flex Center (**1-888-329-9272** or FlexSwitches@eaton.com) for availability of this product.
③ Use three-pole catalog numbers below for 600 Vac, 250 Vdc maximum applications.
④ Ratings are for two-phase AC.

30A heavy-duty switches with Type J fuse provisions are available from the factory only. See table on **Page V2-T1-18** for catalog numbers.

Suitable for service entrance use, except 1200A on 480Y/277 or 600Y/347 grounded wye systems, per NEC 215.10 and 230.95, and four-pole switches.

DH362UGK

600 Vac Heavy-Duty, Non-Fusible, Single-Throw, 277/480–600V—NEMA 1, 3R

System	Ampere Rating	Maximum Horsepower Ratings Single-Phase AC 240V	480V	600V	Three-Phase AC 240V	480V	600V	DC 250V	600V	NEMA 1 Enclosure Indoor Catalog Number	NEMA 3R Enclosure Rainproof Catalog Number
Two-Pole—480 Vac—600 Vac or Vdc ① (Suitable for Service Entrance Use with a Neutral Kit Installed)											
	30	3	7-1/2	10	—	—	—	—	15	**DH261UGK**	**DH261URK**
	60	10	20	25	—	—	—	—	25	**DH262UGK**	**DH262URK**
	100	20	30	40	—	—	—	20	25	**DH263UGK**	**DH263URK**
	200	15	50	50	—	—	—	—	50	**DH264UGK**	**DH264URK**
	400	—	—	—	—	—	—	50	50	**DH265UGK**	**DH265URK**
	600	—	—	—	—	—	—	—	50	**DH266UGK**	**DH266URK**
	800	—	—	—	—	—	—	—	—	**DH267UGK**	**DH267URK**
	1200	—	—	—	—	—	—	—	—	②	—
Three-Pole—480 Vac—600 Vac, 250 Vdc (Suitable for Service Entrance Use with a Neutral Kit Installed)											
	30	3	7-1/2	10	10	20	30	5	—	**DH361UGK**	**DH361URK**
	60	10	20	25	20	50	60	10	—	**DH362UGK**	**DH362URK**
	100	20	40	50	40	75	100	20	—	**DH363UGK**	**DH363URK**
	200	15	50	50	60	125	150	40	—	**DH364UGK**	**DH364URK**
	400	—	—	—	125	250	350	50	—	**DH365UGK**	**DH365URK**
	600	—	—	—	200	400	500	—	—	**DH366UGK**	**DH366URK**
	800	—	—	—	—	500	500	—	—	**DH367UGK**	**DH367URK**
	1200	—	—	—	—	500	500	—	—	**DH368UGK**	**DH368URK**
Four-Pole—480 Vac—600 Vac, 250 Vdc											
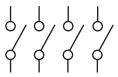	30	10 ③	20 ③	25 ③	10	20	30	5	—	**DH461UGK**	④
	60	20 ③	40 ③	50 ③	20	50	60	10	—	**DH462UGK**	④
	100	40 ③	50 ③	50 ③	40	75	100	20	—	**DH463UGK**	④
	200	50 ③	50 ③	50 ③	60	125	150	40	—	**DH464UGK**	④
	400	50 ③	—	—	125	250	350	50	—	**DH465UGK**	②④
	600	—	—	—	200	400	500	—	—	**DH466UGK**	②④
	800	—	—	—	—	—	—	—	—	②	②④

Notes

① DC rating for 800A switches is 250V.

② Contact the Safety Switch Flex Center (**1-888-329-9272** or FlexSwitches@eaton.com) for availability of this product.

③ Ratings are for two-phase AC.

④ Use NEMA 12. NEMA 12 enclosures (30–1200A) can be field modified to meet NEMA 3R rainproof requirements when a factory provided drain hole is opened.

Suitable for service entrance use, except 1200A on 480Y/277 or 600Y/347 grounded wye systems, per NEC 215.10 and 230.95, and four-pole switches.

600 Vac Heavy-Duty, Non-Fusible, Single-Throw, 277/480–600V—NEMA 12, 4

System	Ampere Rating	Maximum Horsepower Ratings Single-Phase AC 240V	Single-Phase AC 480V	Single-Phase AC 600V	Three-Phase AC 240V	Three-Phase AC 480V	Three-Phase AC 600V	DC 250V	DC 600V	NEMA 12 Enclosure Industrial, Dust-Tight Catalog Number	NEMA 4 Enclosure Watertight, Painted Steel Catalog Number
Two-Pole—480 Vac—600 Vac or Vdc ① (Suitable for Service Entrance Use with a Neutral Kit Installed)											
	30	3	7-1/2	10	—	—	—	—	15	**DH261UDK** ②	—
	60	10	20	25	—	—	—	—	25	**DH262UDK** ②	—
	100	20	30	40	—	—	—	20	25	**DH263UDK** ②	—
	200	15	50	50	—	—	—	—	50	**DH264UDK** ②	—
	400	—	—	—	—	—	—	50	—	**DH265UDK** ②	④
	600	—	—	—	—	—	—	—	—	**DH266UDK** ②	④
	800	—	—	—	—	—	—	—	—	**DH267UDK** ②	④
	1200	—	—	—	—	—	—	—	—	③	—
Three-Pole—480 Vac—600 Vac, 250 Vdc (Suitable for Service Entrance Use with a Neutral Kit Installed)											
	30	3	7-1/2	10	10	20	30	5	—	**DH361UDK** ②	—
	60	10	20	25	20	50	60	10	—	**DH362UDK** ②	—
	100	20	40	50	40	75	100	20	—	**DH363UDK** ②	—
	200	15	50	50	60	125	150	40	—	**DH364UDK** ②	—
	400	—	—	—	125	250	350	50	—	**DH365UDK** ②	**DH365UPK**
	600	—	—	—	200	400	500	—	—	**DH366UDK** ②	**DH366UPK**
	800	—	—	—	—	500	500	—	—	**DH367UDK** ②	**DH367UPK**
	1200	—	—	—	—	500	500	—	—	**DH368UDK**	—
Four-Pole—480 Vac—600 Vac, 250 Vdc											
	30	10 ⑤	20 ⑤	25 ⑤	10	20	30	5	—	**DH461UDK** ②	—
	60	20 ⑤	40 ⑤	50 ⑤	20	50	60	10	—	**DH462UDK** ②	—
	100	40 ⑤	50 ⑤	50 ⑤	40	75	100	20	—	**DH463UDK** ②	—
	200	50 ⑤	50 ⑤	50 ⑤	60	125	150	40	—	**DH464UDK** ②	—
	400	50 ⑤	—	—	125	250	350	50	—	②③	—
	600	—	—	—	200	400	500	—	—	②③	—
	800	—	—	—	—	—	—	—	—	②③	—

Notes

① DC rating for 800A switches is 250V.
② NEMA 12 enclosures (30–1200A) can be field modified to meet NEMA 3R rainproof requirements when a factory provided drain hole is opened.
③ Contact the Safety Switch Flex Center (**1-888-329-9272** or FlexSwitches@eaton.com) for availability of this product.
④ Use three-pole catalog numbers below for 600 Vac, 250 Vdc maximum applications. For 600 Vdc, see note ③.
⑤ Ratings are for two-phase AC.

Suitable for service entrance use, except 1200A on 480Y/277 or 600Y/347 grounded wye systems, per NEC 215.10 and 230.95, and four-pole switches.

DH361UWK

600 Vac Heavy-Duty, Non-Fusible, Single-Throw, 277/480–600V—NEMA 4X

System	Ampere Rating	Maximum Horsepower Ratings Single-Phase AC 240V	Single-Phase AC 480V	Single-Phase AC 600V	Three-Phase AC 240V	Three-Phase AC 480V	Three-Phase AC 600V	DC 250V	DC 600V	NEMA 4X Enclosure Corrosion-Resistant, Stainless Steel Catalog Number
Two-Pole—480 Vac—600 Vac or Vdc ① (Suitable for Service Entrance Use with a Neutral Kit Installed)										
	30	3	7-1/2	10	—	—	—	—	15	② or ③
	60	10	20	25	—	—	—	—	25	② or ③
	100	20	30	40	—	—	—	20	25	② or ③
	200	15	50	50	—	—	—	—	50	② or ③
	400	—	—	—	—	—	—	50	—	② or ③
	600	—	—	—	—	—	—	—	—	② or ③
	800	—	—	—	—	—	—	—	—	② or ③
	1200	—	—	—	—	—	—	—	—	②
Three-Pole—480 Vac—600 Vac, 250 Vdc (Suitable for Service Entrance Use with a Neutral Kit Installed)										
	30	3	7-1/2	10	10	20	30	5	—	**DH361UWK**
	60	10	20	25	20	50	60	10	—	**DH362UWK**
	100	20	40	50	40	75	100	20	—	**DH363UWK**
	200	15	50	50	60	125	150	40	—	**DH364UWK**
	400	—	—	—	125	250	350	50	—	**DH365UWK**
	600	—	—	—	200	400	500	—	—	**DH366UWK**
	800	—	—	—	—	500	500	—	—	**DH367UWK**
	1200	—	—	—	—	500	500	—	—	**DH368UWK**
Four-Pole—480 Vac—600 Vac, 250 Vdc										
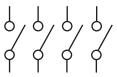	30	10 ④	20 ④	25 ④	10	20	30	5	—	**DH461UWK**
	60	20 ④	40 ④	50 ④	20	50	60	10	—	②
	100	40 ④	50 ④	50 ④	40	75	100	20	—	②
	200	50 ④	50 ④	50 ④	60	125	150	40	—	②
	400	50 ④	—	—	125	250	350	50	—	②
	600	—	—	—	200	400	500	—	—	②
	800	—	—	—	—	—	—	—	—	②

Notes

① DC rating for 800A switches is 250V.

② Contact the Safety Switch Flex Center (**1-888-329-9272** or FlexSwitches@eaton.com) for availability of this product.

③ Use three-pole catalog numbers below for 600 Vac, 250 Vdc maximum applications. For 600 Vdc, see note ②.

④ Ratings are for two-phase AC.

Suitable for service entrance use, except 1200A on 480Y/277 or 600Y/347 grounded wye systems, per NEC 215.10 and 230.95, and four-pole switches.

1

Dimensions

Approximate Dimensions in Inches (mm)

Note: Dimensions are for estimating purposes only.

Heavy-Duty, Non-Fusible, 600V, Three-Pole, Single-Throw

Ampere Rating	Width (W)	Height (H)	Depth (D)	Depth (D2)	Weight Lbs (kg)
NEMA 1, 3R					
30	8.13 (206.5)	15.88 (403.4)	10.00 (254.0)	5.25 (133.3)	16 (7.264)
60	8.13 (206.5)	15.88 (403.4)	10.00 (254.0)	5.25 (133.3)	16 (7.264)
100	11.13 (282.7)	21.69 (550.9)	10.00 (254.0)	5.25 (133.3)	22 (9.988)
200	16.00 (406.4)	27.63 (701.8)	11.25 (285.8)	6.14 (156.0)	46 (20.884)
400	23.00 (584.2)	45.19 (1147.8)	12.63 (320.8)	7.27 (184.7)	110 (49.94)
600	24.00 (609.6)	52.70 (1338.6)	14.25 (362.0)	8.95 (227.3)	135 (61.29)
800	25.38 (644.7)	56.69 (1439.9)	14.25 (362.0)	8.95 (227.3)	158 (71.732)
1200	41.47 (1053.3)	70.31 (1785.9)	19.94 (506.5)	12.44 (316.0)	430 (195.22)
NEMA 12, 4X Stainless Steel, 4					
30	8.13 (206.5)	12.13 (308.1)	10.00 (254.0)	5.50 (139.7)	17 (7.718)
60	8.13 (206.5)	12.13 (308.1)	10.00 (254.0)	5.50 (139.7)	17 (7.718)
100	11.13 (282.7)	24.00 (609.6)	10.25 (260.4)	5.50 (139.7)	28 (12.712)
200	16.00 (406.4)	34.38 (873.3)	11.50 (292.1)	6.44 (163.6)	55 (24.97)
400	23.00 (584.2)	57.63 (1463.8)	12.63 (320.8)	7.19 (182.6)	125 (56.75)
600	24.00 (609.6)	63.00 (1600.2)	14.25 (362.0)	8.88 (225.6)	167 (75.818)
800	25.38 (644.7)	71.75 (1822.5)	14.25 (362.0)	8.88 (225.6)	175 (79.45)
1200	41.47 (1053.3)	70.31 (1785.9)	19.94 (506.5)	13.51 (343.2)	475 (215.65)

Heavy-Duty, Fusible, 240V and 600V, Three-Pole Solid Neutral, Single-Throw

Ampere Rating	Width (W)	Height (H)	Depth (D)	Depth (D2)	Weight Lbs (kg)
NEMA 1, 3R					
30	8.13 (206.5)	15.88 (403.4)	10.00 (254.0)	5.25 (133.3)	20 (9.08)
60	8.13 (206.5)	15.88 (403.4)	10.00 (254.0)	5.25 (133.3)	20 (9.08)
100	11.13 (282.7)	21.69 (550.9)	10.00 (254.0)	5.25 (133.3)	27 (12.258)
200	16.00 (406.4)	27.63 (701.8)	11.25 (285.8)	6.14 (156.0)	52 (23.608)
400	23.00 (584.2)	45.19 (1147.8)	12.63 (320.8)	7.27 (184.7)	120 (54.48)
600	24.00 (609.6)	52.70 (1338.6)	14.25 (362.0)	8.95 (227.3)	153 (69.462)
800	25.38 (644.7)	56.69 (1439.9)	14.25 (362.0)	8.95 (227.3)	168 (76.272)
1200	41.47 (1053.3)	70.31 (1785.9)	19.94 (506.5)	12.44 (316.0)	465 (211.11)
NEMA 12, 4X Stainless Steel, 4					
30	8.13 (206.5)	17.88 (454.2)	10.00 (254.0)	5.50 (139.7)	22 (9.988)
60	8.13 (206.5)	17.88 (454.2)	10.00 (254.0)	5.50 (139.7)	22 (9.988)
100	11.13 (282.7)	24.00 (609.6)	10.25 (260.4)	5.50 (139.7)	30 (13.62)
200	16.00 (406.4)	34.38 (873.3)	11.50 (292.1)	6.44 (163.6)	61 (27.694)
400	23.00 (584.2)	57.63 (1463.8)	12.63 (320.8)	7.19 (182.6)	135 (61.29)
600	24.00 (609.6)	63.00 (1600.2)	14.25 (362.0)	8.88 (225.6)	203 (92.162)
800	25.38 (644.7)	71.75 (1822.5)	14.25 (362.0)	8.88 (225.6)	213 (96.702)
1200	41.47 (1053.3)	70.31 (1785.9)	19.94 (506.5)	13.51 (343.2)	510 (231.54)

NEMA 1-3R Heavy-Duty 30–1200A

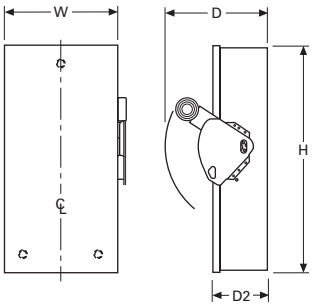

NEMA 4, 4X and 12 Heavy-Duty 30–1200A

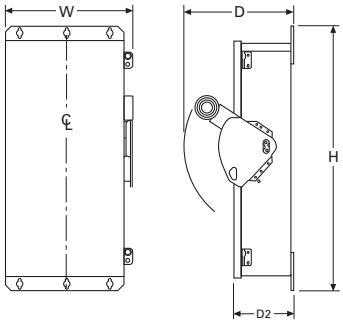

Note: A factory-installed ground lug is supplied in all heavy-duty safety switches.

Six-Pole Motor Circuit

Contents

Description	*Page*
Product Overview	**V2-T1-3**
General Duty	**V2-T1-26**
Heavy-Duty	**V2-T1-31**
Six-Pole Switches Product Selection	**V2-T1-44**
Double-Throw Switches	**V2-T1-45**
EnviroLine—Stainless Steel Switch	**V2-T1-53**
EnviroLine—Upper and Lower Window Switches	**V2-T1-56**
EnviroLine—Receptacle Switches	**V2-T1-59**
EnviroLine—Non-Metallic KRYDON Switch	**V2-T1-61**
Shunt Trip Safety SwitchShunt Trip Safety Switch	**V2-T1-63**
NEMA 7/9—Hazardous Location Disconnect Switch	**V2-T1-66**
Quick Connect Switches	**V2-T1-68**
Solar Disconnect Switch	**V2-T1-70**
316-Grade Stainless Steel Safety Switches	**V2-T1-72**
Mill-Duty Rated, Heavy-Duty, Fusible, Non-Fusible, Single-Throw	**V2-T1-76**
Heavy-Duty Fusible Safety Switches Accepting Cube Fuses	**V2-T1-78**
Elevator Control Switch	**V2-T1-81**
Auxiliary Power Heavy-Duty Safety Switch	**V2-T1-83**
Left-Handed Safety Switch	**V2-T1-86**
200% Neutral Safety Switches	**V2-T1-87**
Pringle Bolted Pressure Switch	**V2-T1-88**
Type DS, Fusible and Non-Fusible	**V2-T1-91**
Type Visi-Flex DE-ION	**V2-T1-94**
Flange Mounted—Variable Depth	**V2-T1-98**
Flange Mounted—Fixed Depth	**V2-T1-102**

Six-Pole Switches

Product Description

- 600 Vac, 250 Vdc maximum
- 30–800A
- Fusible or non-fusible

Application Description

A compact safety switch that's ideal for use in heavy industry...when an "in sight" disconnecting means is required for two-speed motors that are remote from their motor control devices.

Features, Benefits and Functions

- Trunk-type latches keep the cover tightly closed and a neoprene gasket seals out moisture and dust from the switch assembly
- Visible double-break quick-make, quick-break rotary blade mechanism. Two points of contact provide a positive open and close, easier operation, and also help prevent contact burning for longer contact life
- Clear line shield protection
- Built-in fuse pullers
- Clearly visible handle
- Triple padlocking capability; cabinet door can be further padlocked at the top and bottom
- Deionizing arc chutes; arc chutes confine and suppress the arcs produced by opening contacts under load
- For factory modifications, refer to **Pages V2-T1-16** through **V2-T1-19**

Standards and Certifications

- UL listed File No. E5239

Listed

1 **Product Selection**

600 Vac Heavy-Duty, Fusible, Six-Pole, Single-Throw

System	Ampere Rating	Maximum Horsepower Ratings, Three-Phase AC (Higher Rating with Time Delay Fuses) 240V	480V	600V	NEMA 12 Enclosure Industrial, Dust-Tight Catalog Number	NEMA 4X Enclosure Corrosion-Resistant, Stainless Steel Catalog Number
600 Vac with Fuse Clips—250 Vdc						
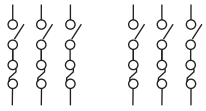	30	3–7-1/2	5–15	7-1/2–20	**DH661FDK** ①	②
	60	7-1/2–15	15–30	15–50	**DH662FDK** ①	②
	100	15–30	25–60	30–75	**DH663FDK** ①	②
	200	25–60	50–125	60–150	**DH664FDK** ①	②
	400	—	—	—	②	②
	600	—	—	—	②	②
	800	—	—	—	②	②

DH661UDK

600 Vac Heavy-Duty, Non-Fusible, Six-Pole, Single-Throw

System	Ampere Rating	Maximum Horsepower Ratings Three-Phase AC 240V	480V	600V	Three-Phase DC 250V	600V ③	NEMA 12 Enclosure Industrial, Dust-Tight Catalog Number	NEMA 4X Enclosure Corrosion-Resistant, Stainless Steel Catalog Number
600 Vac—250 Vdc								
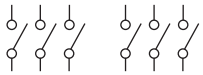	30	10	20	30	5	15	**DH661UDK** ①	**DH661UWK**
	60	20	50	60	10	25	**DH662UDK** ①	**DH662UWK**
	100	40	75	100	20	25	**DH663UDK** ①	**DH663UWK**
	200	60	125	150	40	50	**DH664UDK** ①	**DH664UWK**
	400	—	—	—	—	—	②	②
	600	—	—	—	—	—	②	②
	800	—	—	—	—	—	②	②

Notes

① NEMA 12 enclosures (30–800A) can be field modified to meet NEMA 3R rainproof requirements when a factory provided drain hole is opened.

② Contact the Safety Switch Flex Center (**1-888-329-9272** or FlexSwitches@eaton.com) for availability of this product.

③ 600 Vdc rating requires that the switch be wired per the wiring diagram on the device publication.

30A heavy-duty switches with Type J fuse provisions are available from the factory only. See table on **Page V2-T1-18** for catalog numbers.

Heavy-Duty Double-Throw

Contents

Description	*Page*
Product Overview	**V2-T1-3**
General Duty	**V2-T1-26**
Heavy-Duty	**V2-T1-31**
Six-Pole Switches	**V2-T1-43**
Double-Throw Switches	
Features, Benefits and Functions	**V2-T1-46**
Standards and Certifications	**V2-T1-46**
Product Selection	**V2-T1-47**
Technical Data and Specifications	**V2-T1-51**
Dimensions	**V2-T1-51**
EnviroLine—Stainless Steel Switch	**V2-T1-53**
EnviroLine—Upper and Lower Window Switches	**V2-T1-56**
EnviroLine—Receptacle Switches	**V2-T1-59**
EnviroLine—Non-Metallic KRYDON Switch	**V2-T1-61**
Shunt Trip Safety SwitchShunt Trip Safety Switch	**V2-T1-63**
NEMA 7/9—Hazardous Location Disconnect Switch	**V2-T1-66**
Quick Connect Switches	**V2-T1-68**
Solar Disconnect Switch	**V2-T1-70**
316-Grade Stainless Steel Safety Switches	**V2-T1-72**
Mill-Duty Rated, Heavy-Duty, Fusible, Non-Fusible, Single-Throw	**V2-T1-76**
Heavy-Duty Fusible Safety Switches Accepting Cube Fuses	**V2-T1-78**
Elevator Control Switch	**V2-T1-81**
Auxiliary Power Heavy-Duty Safety Switch	**V2-T1-83**
Left-Handed Safety Switch	**V2-T1-86**
200% Neutral Safety Switches	**V2-T1-87**
Pringle Bolted Pressure Switch	**V2-T1-88**
Type DS, Fusible and Non-Fusible	**V2-T1-91**
Type Visi-Flex DE-ION	**V2-T1-94**
Flange Mounted—Variable Depth	**V2-T1-98**
Flange Mounted—Fixed Depth	**V2-T1-102**

Double-Throw Switches

Product Description

Used to transfer service from a normal power source to an alternate source...or to switch from one load circuit to another.

- 30–1200A
- Horsepower rated
- 600 Vac, 250 Vdc maximum
- 800–1200A fusible utilize common set of fuses; two Source 1 load applications
- Fusible or non-fusible
- Fusible and non-fusible switches are 100% load break and 100% load make rated
- Suitable for service entrance applications unless otherwise noted
- The continuous load current of fusible switches is not to exceed 80% of the rating of fuses employed in other than motor circuits. Non-fusible switches are 100% fully rated
- Approved for service entrance with neutral or ground lug kit installed
- Wiring configuration from factory allows a single load to be supplied by a normal or alternate source. Can be field modified to allow two loads to be alternately supplied by a single power source

240 Vac General-Duty, Non-Fusible, Compact Design, Double-Throw

- 30–100A
- Suitable for service entrance use with neutral kit installed
- Non-fusible

240 Vac General-Duty, Non-Fusible, Double-Throw

- 30–400A
- Horsepower rated
- Suitable for service entrance use with neutral kit installed
- Non-fusible
- Quick-make, quick-break operating mechanism

240 Vac Heavy-Duty, Fusible, Non-Fusible, Double-Throw

- 30–800A
- Horsepower rated
- Suitable for service entrance use with neutral kit installed
- Fusible and non-fusible
- For factory modifications, refer to **Pages V2-T1-16** through **V2-T1-19**

Features, Benefits and Functions

- Ample wire bending space provides for easier installation
- Visible double-break quick-make, quick-break rotary blade mechanism. Two points of contact provide a positive open and close, easier operation, and also help prevent contact burning for longer contact life
- Triple padlocking capability. Personnel safety feature since the large hasp can accommodate up to three 3/8-inch (9.5 mm) shank locks. Clearly visible handle. The position (ON or OFF) can be clearly seen from a distance
- Deionizing arc chutes; arc chutes confine and suppress the arcs produced by opening contacts under load
- Additional locking capability; cabinet door can be further padlocked at the top and bottom
- Clear line shield (provided on fusible double-throw) protects against accidental contact with energized parts. Probe holes enable the user to test if the line side is energized without removing the shield
- Tangential knockouts on sides, top and bottom. Enables any size of conduit to be mounted close to the wall, providing for cable installation closer to the wall and a neat appearance

Standards and Certifications

- UL listed switching neutral capability is available on three-pole and four-pole non-fusible double-throw switches with the installation of the proper bonding kit shown on **Page V2-T1-14**
- Suitable for use as a manually operated switch per 2005 NEC Article 702
- UL listed File No. E5239

Listed

Product Selection

DT223URH-N
Compact Design

240 Vac General-Duty, Non-Fusible, Compact Design, Double-Throw

Ampere Rating Main and Standby	NEMA 3R Enclosure Rainproof Catalog Number
Two-Pole—240 Vac	
30	**DT221URH**
60	**DT222URH**
100	**DT223URH**
Two-Pole, Three-Wire—240 Vac—Solid Neutral	
30	**DT221URH-N**
60	**DT222URH-N**
100	**DT223URH-N**

DT224URK-NPS

240 Vac General-Duty, Non-Fusible, Compact Design, Double-Throw

Ampere Rating Main and Standby	Maximum Horsepower Ratings Single-Phase AC 240V	480V	600V	Three-Phase AC 240V	480V	600V	DC 250V	NEMA 3R Enclosure Rainproof Catalog Number
Two-Pole—240 Vac—250 Vdc								
30	3	—	—	—	—	—	5	**DT221URKPS**
60	1	—	—	—	—	—	10	**DT222URKPS**
100	20	—	—	—	—	—	20	**DT223URKPS**
200	15	—	—	—	—	—	40	**DT224URKPS**
400	—	—	—	—	—	—	50	**DT225URKPS**
Two-Pole, Three-Wire—240 Vac—250 Vdc, Solid Neutral								
30	3	—	—	—	—	—	5	**DT221URK-NPS**
60	10	—	—	—	—	—	10	**DT222URK-NPS**
100	20	—	—	—	—	—	20	**DT223URK-NPS**
200	15	—	—	—	—	—	40	**DT224URK-NPS**
400	—	—	—	—	—	—	50	**DT225URK-NPS**

240 Vac Heavy-Duty, Fusible, Double-Throw

Ampere Rating Main and Standby	Fuse Class Provision	Maximum Horsepower Ratings with Time Delay Fuses Single-Phase AC 240V	480V	600V	Three-Phase AC 240V	480V	600V	DC 250V	NEMA 1 Enclosure Indoor Catalog Number	NEMA 3R Enclosure Rainproof Catalog Number
Two-Pole—240 Vac—250 Vdc										
200	H	15	—	—	—	—	—	40	**DT224FGK**	**DT224FRK**
Three-Pole—240 Vac—250 Vdc										
30	H	3	—	—	7-1/2	—	—	5	**DT321FGK**	**DT321FRK**
60	H	10	—	—	15	—	—	10	**DT322FGK**	**DT322FRK**
100	H	15	—	—	30	—	—	20	**DT323FGK**	**DT323FRK**
200	H	15	—	—	60	—	—	40	**DT324FGK**	**DT324FRK**
400	H	—	—	—	125	—	—	50	**DT325FGK**	**DT325FRK**
600	J	—	—	—	50	—	—	50	**DT326FGK**	**DT326FRK**
800	L	—	—	—	—	—	—	—	**DT327FGK**	**DT327FRK**
1200	L	—	—	—	—	—	—	—	**DT328FGK**	**DT328FRK**

240 Vac Heavy-Duty, Non-Fusible, Double-Throw

Ampere Rating Main and Standby	Maximum Horsepower Ratings Single-Phase AC 240V	480V	600V	Three-Phase AC 240V	480V	600V	DC 250V	NEMA 1 Enclosure Indoor Catalog Number	NEMA 3R Enclosure Rainproof Catalog Number
Two-Pole—240 Vac—250 Vdc									
30	3	—	—	—	—	—	5	**DT221UGK**	②
60	10	—	—	—	—	—	10	**DT222UGK**	②
100	20	—	—	—	—	—	20	**DT223UGK**	②
200	15	—	—	—	—	—	40	**DT224UGK**	**DT224URK**
400	—	—	—	—	—	—	50	**DT225UGK**	**DT225URK**
600	—	—	—	—	—	—	—	**DT226UGK**	②
800	—	—	—	—	—	—	—	**DT227UGK**	**DT227URK**
1200	—	—	—	—	—	—	—	**DT228UGK**	**DT228URK**
Three-Pole—240 Vac—250 Vdc									
30	3	—	—	10	—	—	5	**DT321UGK**	②
60	10	—	—	20	—	—	10	**DT322UGK**	②
100	20	—	—	40	—	—	20	**DT323UGK**	**DT323URK**
200	15	—	—	60	—	—	40	**DT324UGK**	**DT324URK**
400	—	—	—	125	—	—	50	**DT325UGK**	**DT325URK**
600	—	—	—	125	—	—	50	**DT326UGK**	②
800	—	—	—	125	—	—	50	**DT327UGK** ①	**DT327URK**
800	—	—	—	125	—	—	50	**DT327UGK-N**	**DT328URK**
1200	—	—	—	125	—	—	50	**DT328UGK**	—

Notes

① Field-installable neutral kit is not available. If a neutral is required, order the catalog number shown in the table with "N" suffix.

② Contact the Safety Switch Flex Center (**1-888-329-9272** or FlexSwitches@eaton.com) for availability of this product.

UL listed switching neutral capability is available on three-pole and four-pole non-fusible double-throw switches with the installation of the proper bonding kit shown on **Page V2-T1-14**. See **Page V2-T1-18** for factory installation from the Flex Center.

DT363FGK

600 Vac Heavy-Duty, Fusible, Double-Throw

Ampere Rating Main and Standby	Fuse Class Provision	Maximum Horsepower Ratings with Time Delay Fuses: Single-Phase AC 480V	Single-Phase AC 600V	Three-Phase AC 480V	Three-Phase AC 600V	DC 250V	NEMA 1 Enclosure Indoor Catalog Number	NEMA 3R Enclosure Rainproof Catalog Number	NEMA 12 Enclosure Industrial, Dust-Tight Catalog Number	NEMA 4X Enclosure Corrosion-Resistant, Stainless Steel Catalog Number
Three-Pole—600 Vac—250 Vdc										
30	H	7-1/2	10	15	20	—	**DT361FGK**	①	①	**DT361FWK**
60	H	20	25	30	50	—	**DT362FGK**	①	①	**DT362FWK**
100	H	30	40	60	75	—	**DT363FGK**	**DT363FRK**	①	**DT363FWK**
200	H	50	50	125	150	40	**DT364FGK**	**DT364FRK**	①	**DT364FWK**
400	T	—	—	250	350	50	**DT365FGK**	**DT365FRK**	①	**DT365FWK**
600	J	—	—	—	—	—	**DT366FGK**	**DT366FRK**	①	①
800	L	—	—	—	—	—	**DT367FGK**	**DT367FRK**	①	①
1200	L	—	—	—	—	—	**DT368FGK**	**DT368FRK**	①	①

DT363URK

600 Vac Heavy-Duty, Non-Fusible, Double-Throw

Ampere Rating Main and Standby	Maximum Horsepower Ratings: Single-Phase AC 480V	Single-Phase AC 600V	Three-Phase AC 480V	Three-Phase AC 600V	DC 250V	NEMA 1 Enclosure Indoor Catalog Number	NEMA 3R Enclosure Rainproof Catalog Number	NEMA 12 Enclosure Industrial, Dust-Tight Catalog Number	NEMA 4X Enclosure Corrosion-Resistant, Stainless Steel Catalog Number
Two-Pole—600 Vac—250 Vdc									
30	7-1/2	10	—	—	5	**DT261UGK**	①	—	—
60	20	25	—	—	10	**DT262UGK**	①	—	—
100	40	50	—	—	20	**DT263UGK**	①	—	—
200	50	50	—	—	40	**DT264UGK** ②	**DT264URK** ②	—	—
400	—	—	—	—	50	**DT265UGK**	**DT265URK**	—	—
600	—	—	—	—	50	**DT266UGK**	**DT266URK**	—	—
800	—	—	—	—	50	**DT267UGK**	**DT267URK**	—	—
1200	—	—	—	—	50	**DT268UGK**	**DT268URK**	—	—
Three-Pole—600 Vac—250 Vdc									
30	7-1/2	10	20	30	5	**DT361UGK**	**DT361URK**	**DT361UDK** ④	**DT361UWK**
60	20	25	50	60	10	**DT362UGK**	**DT362URK**	**DT362UDK** ④	**DT362UWK**
100	40	50	75	100	20	**DT363UGK**	**DT363URK**	**DT363UDK** ④	**DT363UWK**
200	50	50	125	150	40	**DT364UGK**	**DT364URK**	**DT364UDK** ④	**DT364UWK**
400	—	—	250	350	50	**DT365UGK**	**DT365URK**	**DT365UDK** ④⑤	**DT365UWK**
600	—	—	250	350	50	**DT366UGK**	**DT366URK**	①④	①
800	—	—	250	350	50	**DT367UGK** ③	**DT367URK** ③	①④	①
800	—	—	250	350	50	**DT367UGKN**	**DT367URKN**	①④	①
1200	—	—	250	350	50	**DT368UGK**	**DT368URK**	①④	①

Notes

① Contact the Safety Switch Flex Center (**1-888-329-9272** or FlexSwitches@eaton.com) for availability of this product.

② Rated 600 Vdc, 50 hp in addition to ratings shown in table.

③ **Field installable neutral kit is not available. If a neutral is required, order the catalog number shown in the table with "N" suffix.**

④ NEMA 12 enclosures (30–1200A) can be field modified to meet NEMA 3R rainproof requirements when a factory provided drain hole is opened.

⑤ Also available in 240 Vac catalog number DT325UDK.

UL listed switching neutral capability is available on three-pole and four-pole non-fusible double-throw switches with the installation of the proper bonding kit shown on **Page V2-T1-14**. See **Page V2-T1-18** for factory installation from the Flex Center.

1

DT363URK

600 Vac Heavy-Duty, Non-Fusible, Double-Throw

Ampere Rating Main and Standby	Maximum Horsepower Ratings Single-Phase AC 480V	Single-Phase AC 600V	Three-Phase AC 480V	Three-Phase AC 600V	DC 250V	NEMA 1 Enclosure Indoor Catalog Number	NEMA 3R Enclosure Rainproof Catalog Number	NEMA 12 Enclosure Industrial, Dust-Tight Catalog Number	NEMA 4X Enclosure Corrosion-Resistant, Stainless Steel Catalog Number
Four-Pole—600 Vac—250 Vdc ①									
30	7-1/2	10	20	30	5	②	**DT461URK**	②	②
60	20	25	50	60	10	②	**DT462URK**	②	②
100	40	50	75	100	20	②	**DT463URK**	②	②
200	—	50	125	150	40	**DT464UGK**	**DT464URK**	②	②
400	—	—	250	350	50	**DT465UGK**	**DT465URK**	②	②
600	—	—	250	350	50	**DT466UGK**	**DT466URK**	②	②
800	—	—	250	350	50	**DT467UGK**	**DT467URK**	②	②
Six-Pole—600 Vac—250 Vdc ①									
30	7-1/2	10	15	30	5	②	**DT661URK**	②	②
60	20	25	50	60	10	②	**DT662URK**	②	②
100	40	50	75	100	20	②	**DT663URK**	②	②

Notes

① **Field installable neutral kit is not available. If a neutral is required, order the catalog number shown in the table with "N" suffix.**

② Contact the Safety Switch Flex Center (**1-888-329-9272** or FlexSwitches@eaton.com) for availability of this product.

UL listed switching neutral capability is available on three-pole and four-pole non-fusible double-throw switches with the installation of the proper bonding kit shown on **Page V2-T1-14**. See **Page V2-T1-18** for factory installation from the Flex Center.

Technical Data and Specifications

Typical Fusible, Double-Throw Schematic Diagram

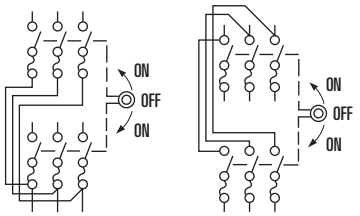

Fusible Three-Pole Two Sources **Fusible Three-Pole Two Loads**

Typical Non-Fusible, Double-Throw Schematic Diagram

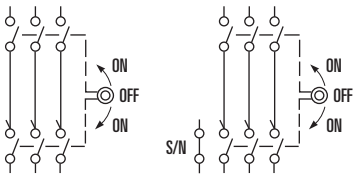

Non-Fusible Three-Pole Two Sources or Two Loads **Non-Fusible Three-Pole Two Sources or Two Loads**

Typical General-Duty, Double-Throw Schematic Diagrams (with and without factory-installed neutral)

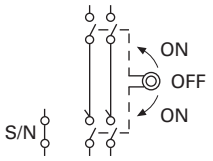

Two Sources

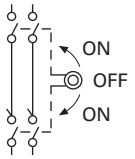

Short-Circuit Ratings Using Class "R", "J" or "T" Fusing Where Applicable

Ampere Rating	Voltage Ratings Type 1	Type 3R	Type 12	Type 4 and 4X
30	100k at 600	100k at 600	100k at 600	100k at 600
60	100k at 600	100k at 600	100k at 600	100k at 600
100	100k at 600	100k at 600	100k at 600	100k at 600
200	100k at 600	100k at 600	100k at 600	100k at 600
400	100k at 600	100k at 600	100k at 600	100k at 600
600	100k at 600	100k at 600	100k at 600	100k at 600
800	100k at 600	100k at 600	—	—
1200	100k at 600	100k at 600	—	—

Dimensions

Approximate Dimensions in Inches (mm)

General-Duty, Non-Fusible, 240V, Two-Pole Solid Neutral, Double-Throw, Compact Design

Ampere Rating	Height (H)	Width (W)	Depth (D)	Depth (D2)	Weight Lbs (kg)
NEMA 3R					
30	14.69 (373.1)	9.63 (244.6)	10.81 (274.6)	5.23 (132.8)	12 (5.5)
60	14.69 (373.1)	9.63 (244.6)	10.81 (274.6)	5.23 (132.8)	12 (5.5)
100	14.69 (373.1)	9.63 (244.6)	10.81 (274.6)	5.23 (132.8)	12 (5.5)

General-Duty, Non-Fusible, 240V, Two-Pole Solid Neutral, Double-Throw, Quick-Make, Quick-Break Design

Ampere Rating	Height (H)	Width (W)	Depth (D)	Depth (D2)	Weight Lbs (kg)
NEMA 3R					
30	24.63 (625.6)	11.94 (303.3)	9.88 (251.0)	5.38 (136.7)	34 (15.4)
60	24.63 (625.6)	11.94 (303.3)	9.88 (251.0)	5.38 (136.7)	34 (15.4
100	24.63 (625.6)	11.94 (303.3)	9.88 (251.0)	5.38 (136.7)	34 (15.4)
200	37.38 (949.5)	19.56 (496.8)	11.25 (285.8)	6.10 (154.9)	80 (36.3)
400	53.81 (1366.8)	23.13 (587.5)	12.50 (317.6)	8.88 (225.6)	140 (63.6)

NEMA 3R, 30–400A, General-Duty, Non-Fusible, Double-Throw

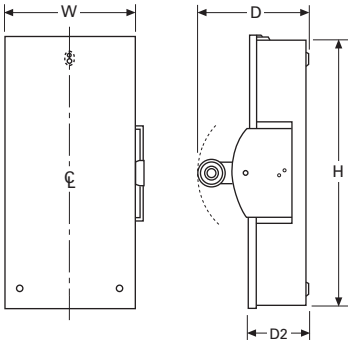

Notes

Class "H" fuse clips supplied as standard for 30–400A except Class "T" for 400A at 600V. Rated at 10,000 rms symmetrical when using Class "H" fuses.

Table is not applicable to the compact design shown on **Page V2-T1-47**. The compact design is suitable for use on a circuit capable of delivering not more than 10,000 rms symmetrical amperes.

Class "R" fuse adapter kits are shown on **Page V2-T1-14**. Individual adapter kits are applicable as shown on **Page V2-T1-14** and yield the short-circuit ratings per the tables above when Class "R" fuses are installed. When installed, Class "R" fuse adapter kits reject all fuses except Class "R."

Class "J" fuse provisions can be obtained on most 60–400A safety switches by moving the fuse base to a new position as instructed by the device publication label. Class "J" fuse adapter kits, where needed, are shown on **Page V2-T1-14** and yield the short-circuit ratings per the tables above when Class "J" fuses are installed. Class "J" fuse provisions must be factory installed on 30A heavy-duty switches. Catalog numbers are shown in table on **Page V2-T1-18**. Class "J" fusing is not applicable on 30–200A general-duty switches, 30–100A double-throw switches, and any switch higher than 600A.

Class "T" fuse adapter kits are shown on **Page V2-T1-14**. Individual adapter kits are applicable to 200–800A switches as shown on **Page V2-T1-14** and yield the short-circuit ratings per the tables to the left when Class "T" fuses are installed. On 1200A switches, Class "T" fuse provisions can be obtained by moving the fuse base to a new position as instructed by the device publication label.

1

Approximate Dimensions in Inches (mm)

Heavy-Duty, Non-Fusible, 240V and 600V, Three-Pole, Double-Throw

Ampere Rating	Width (W)	Height (H)	Depth (D)	Depth (D2)	Weight Lbs (kg)
NEMA 1, 3R					
30	11.94 (303.3)	24.63 (625.6)	9.88 (251.0)	5.38 (136.7)	34 (15.436)
60	11.94 (303.3)	24.63 (625.6)	9.88 (251.0)	5.38 (136.7)	34 (15.436)
100	11.94 (303.3)	24.63 (625.6)	9.88 (251.0)	5.38 (136.7)	34 (15.436)
200	19.56 (496.8)	37.38 (949.5)	11.25 (285.8)	6.10 (154.9)	80 (36.32)
400	23.13 (587.5)	53.81 (1366.8)	12.50 (317.5)	7.25 (184.2)	140 (63.56)
600	24.13 (612.9)	63.31 (1608.1)	14.13 (358.9)	8.88 (225.6)	175 (79.45)
800	24.13 (612.9)	63.31 (1608.1)	14.13 (358.9)	8.88 (225.6)	175 (79.45)
1200	42.62 (1082.5)	78.11 (1984.0)	25.62 (650.7)	20.47 (519.9)	—
NEMA 12, 4X Stainless Steel					
30	12.00 (304.8)	25.88 (657.4)	10.25 (260.4)	5.50 (139.7)	60 (27.24)
60	12.00 (304.8)	25.88 (657.4)	10.25 (260.4)	5.50 (139.7)	60 (27.24)
100	12.00 (304.8)	25.88 (657.4)	10.25 (260.4)	5.50 (139.7)	60 (27.24)
200	19.50 (495.3)	41.00 (1041.4)	11.63 (295.4)	6.48 (164.6)	105 (47.67)
400	23.00 (584.2)	57.50 (1460.5)	12.50 (317.5)	7.25 (184.2)	185 (83.99)
600	—	—	—	—	—
800	—	—	—	—	—
1200	—	—	—	—	—

Heavy-Duty, Fusible, 240V and 600V, Three-Pole, Double-Throw

Ampere Rating	Width (W)	Height (H)	Depth (D)	Depth (D2)	Weight Lbs (kg)
NEMA 1, 3R					
30	11.94 (303.3)	36.63 (930.4)	9.88 (251.0)	5.38 (136.7)	44 (19.976)
60	11.94 (303.3)	36.63 (930.4)	9.88 (251.0)	5.38 (136.7)	44 (19.976)
100	11.94 (303.3)	36.63 (930.4)	9.88 (251.0)	5.38 (136.7)	44 (19.976)
200	19.56 (496.8)	50.88 (1292.4)	11.25 (285.8)	6.10 (154.9)	95 (43.13)
400	25.38 (644.7)	74.75 (1898.7)	14.13 (358.9)	8.88 (225.6)	230 (104.42)
600	28.12 (714.3)	58.86 (1495.0)	25.62 (650.7)	20.47 (520.0)	320 (145.28)
800	28.12 (714.2)	58.86 (1495.0)	25.62 (650.7)	20.47 (519.9)	—
1200	42.62 (1082.5)	78.11 (1984.0)	29.62 (752.3)	20.47 (519.9)	—
NEMA 12, 4X Stainless Steel, 4					
30	12.00 (304.8)	39.81 (1011.2)	10.25 (260.4)	5.50 (139.7)	45 (20.43)
60	12.00 (304.8)	39.81 (1011.2)	10.25 (260.4)	5.50 (139.7)	45 (20.43)
100	12.00 (304.8)	39.81 (1011.2)	10.25 (260.4)	5.50 (139.7)	45 (20.43)
200	19.56 (496.8)	55.63 (1413.0)	11.63 (295.4)	6.46 (164.1)	100 (45.4)
400	25.38 (644.7)	74.75 (1898.7)	14.13 (358.9)	8.92 (226.6)	260 (118.04)
600	—	—	—	—	—
800	—	—	—	—	—
1200	—	—	—	—	—

NEMA 1-3R Double-Throw 30–800A

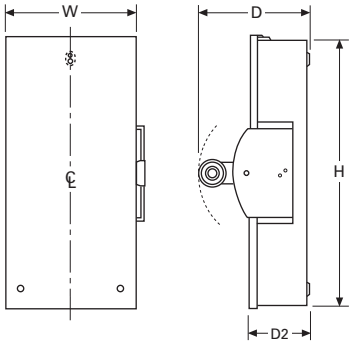

NEMA 12-4X Double-Throw 30–400A

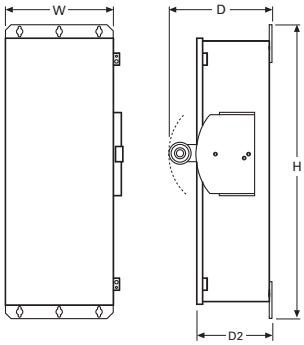

EnviroLine/Stainless Steel Switch

Contents

Description	*Page*
Product Overview	**V2-T1-3**
General Duty	**V2-T1-26**
Heavy-Duty	**V2-T1-31**
Six-Pole Switches	**V2-T1-43**
Double-Throw Switches	**V2-T1-45**
EnviroLine—Stainless Steel Switch Product Selection	**V2-T1-54**
EnviroLine—Upper and Lower Window Switches	**V2-T1-56**
EnviroLine—Receptacle Switches	**V2-T1-59**
EnviroLine—Non-Metallic KRYDON Switch	**V2-T1-61**
Shunt Trip Safety SwitchShunt Trip Safety Switch	**V2-T1-63**
NEMA 7/9—Hazardous Location Disconnect Switch	**V2-T1-66**
Quick Connect Switches	**V2-T1-68**
Solar Disconnect Switch	**V2-T1-70**
316-Grade Stainless Steel Safety Switches	**V2-T1-72**
Mill-Duty Rated, Heavy-Duty, Fusible, Non-Fusible, Single-Throw	**V2-T1-76**
Heavy-Duty Fusible Safety Switches Accepting Cube Fuses	**V2-T1-78**
Elevator Control Switch	**V2-T1-81**
Auxiliary Power Heavy-Duty Safety Switch	**V2-T1-83**
Left-Handed Safety Switch	**V2-T1-86**
200% Neutral Safety Switches	**V2-T1-87**
Pringle Bolted Pressure Switch	**V2-T1-88**
Type DS, Fusible and Non-Fusible	**V2-T1-91**
Type Visi-Flex DE-ION	**V2-T1-94**
Flange Mounted—Variable Depth	**V2-T1-98**
Flange Mounted—Fixed Depth	**V2-T1-102**

EnviroLine—Stainless Steel Switch

Product Description

Primarily for use in the meat packing and food processing industries or any application where water is frequently used to hose down equipment. In addition to the stainless steel NEMA 4X enclosure, the interior mechanism, backpan and springs are stainless steel. Ratings for these heavy-duty switches are 30–400A, 240–600 Vac, available as fusible and non-fusible switches.

Features

- Stainless steel enclosure (304 grade)
- Stainless steel mechanism (304 grade)
- 30–400A
- Horsepower rated
- Suitable for service entrance use

Standards and Certifications

- Upper and lower window UL listed and NEMA approved
- UL 98
- UL listed under Section 508
- UL listed File No. E165150 and E5239

Listed

1 **Product Selection**

DH321NWKX

240 Vac Heavy-Duty, Fusible, Single-Throw Stainless Steel Enclosure and Operating Mechanism

System	Ampere Rating	Fuse Class Provision	Maximum Horsepower Ratings with Time Delay Fuses AC Standard Fuse Single-Phase	Three-Phase	Time Delay Single-Phase	Three-Phase	DC 250V	NEMA 4X Enclosure Corrosion-Resistant, Stainless Steel Catalog Number
Three-Wire (Two Blades, Two Fuses, S/N), 240 Vac—250 Vdc								
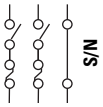	30	H	1-1/2	3	3	7-1/2	5	**DH221NWKX**
	60	H	3	7-1/2	10	15	10	**DH222NWKX**
	100	H	7-1/2	15	15	30	20	**DH223NWKX**
	200	H	15	25	15	60	40	**DH224NWKX**
	400	H	—	50	—	125	50	**DH225NWKX**
Three-Pole, 240 Vac—250 Vdc (Suitable for Service Entrance Use with a Neutral Kit Installed)								
	30	H	1-1/2	3	—	7-1/2	—	**DH321FWKX**
	60	H	3	7-1/2	—	15	—	**DH322FWKX**
	100	H	—	—	—	—	—	①
	200	H	15	25	—	60	40	**DH324FWKX**
	400	H	—	50	—	125	50	**DH325FWKX**
Four-Wire (Three Blades, Three Fuses, S/N), 240 Vac—250 Vdc								
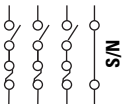	30	H	—	3	—	7-1/2	—	**DH321NWKX**
	60	H	—	7-1/2	—	15	—	**DH322NWKX**
	100	H	—	15	—	30	20	**DH323NWKX**
	200	H	—	25	—	60	—	**DH324NWKX**
	400	H	—	50	—	125	50	**DH325NWKX**

Notes

① Contact the Safety Switch Flex Center (**1-888-329-9272** or FlexSwitches@eaton.com) for availability of this product.

30A heavy-duty switches with Type J fuse provisions are available from the factory only. See table on **Page V2-T1-18** for catalog numbers.

DH31UWKX

600 Vac Heavy-Duty, Fusible 277/480V, Single-Throw Stainless Steel Enclosure and Operating Mechanism

System	Ampere Rating	Fuse Class Provision	Maximum Horsepower Ratings with Time Delay Fuses: Single-Phase AC 480V	Single-Phase AC 600V	Three-Phase AC 480V	Three-Phase AC 600V	DC 250V	DC 600V	NEMA 4X Enclosure Corrosion-Resistant, Stainless Steel Catalog Number
Two-Pole, 480 Vac—600 Vac or Vdc ① (Suitable for Service Entrance Use with a Neutral Kit Installed)									
	30	H	7-1/2	10	—	—	—	15	**DH261FWKX**
	60	H	—	—	—	—	—	—	②
	100	H	—	—	—	—	—	—	②
	200	H	50	50	—	—	—	50	**DH264FWKX**
	400	H	—	—	—	—	—	—	②
	600	H	—	—	—	—	—	50	**DH265FWKX**
Three-Pole, 480 Vac—600 Vac, 250 Vdc (Suitable for Service Entrance Use with a Neutral Kit Installed)									
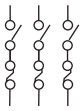	30	H	7-1/2	10	15	20	—	—	**DH361FWKX**
	60	H	20	25	30	50	—	—	**DH362FWKX**
	100	H	30	30	60	75	—	—	**DH363FWKX**
	200	H	50	50	125	150	—	—	**DH364FWKX**
	400	H	—	—	250	350	—	—	**DH365FWKX**
	600	H	—	—	250	350	—	—	**DH366FWKX**
Four-Wire (Three Blades, Three Fuses, S/N) 480 Vac—600 Vac, 250 Vdc									
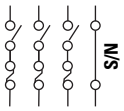	30	H	7-1/2	10	20	30	—	—	**DH361NWKX**
	60	H	20	25	50	60	—	—	**DH362NWKX**
	100	H	40	50	75	100	—	—	**DH363NWKX**
	200	H	50	50	125	150	—	—	**DH364NWKX**
	400	H	—	—	250	350	—	—	**DH365NWKX**
	600	H	—	—	250	350	—	—	**DH366NWKX**

600 Vac Heavy-Duty, Non-Fusible 277/480V, Single-Throw Stainless Steel Enclosure and Operating Mechanism

System	Ampere Rating	Maximum Horsepower Ratings: Single-Phase AC 480V	Single-Phase AC 600V	Three-Phase AC 480V	Three-Phase AC 600V	DC 250V	DC 600V	NEMA 4X Enclosure Corrosion-Resistant, Stainless Steel Catalog Number
Three-Pole, 480 Vac—600 Vac, 250 Vdc (Suitable for Service Entrance Use with a Neutral Kit Installed)								
	30	7-1/2	10	20	30	5	—	**DH361UWKX**
	60	20	25	50	60	10	—	**DH362UWKX**
	100	40	50	75	100	20	—	**DH363UWKX**
	200	50	50	125	150	40	—	**DH364UWKX**
	400	—	—	250	350	50	—	**DH365UWKX**
	600	—	—	250	350	50	—	**DH366UWKX**

Notes

① DC rating for 400A switches is 250V.

② Contact the Safety Switch Flex Center (**1-888-329-9272** or FlexSwitches@eaton.com) for availability of this product.

30A heavy-duty switches with Type J fuse provisions are available from the factory only. See table on **Page V2-T1-18** for catalog numbers.

EnviroLine/Window Switch

Contents

Description	Page
Product Overview	V2-T1-3
General Duty	V2-T1-26
Heavy-Duty	V2-T1-31
Six-Pole Switches	V2-T1-43
Double-Throw Switches	V2-T1-45
EnviroLine—Stainless Steel Switch	V2-T1-53
EnviroLine—Upper and Lower Window Switches Product Selection	V2-T1-57
EnviroLine—Receptacle Switches	V2-T1-59
EnviroLine—Non-Metallic KRYDON Switch	V2-T1-61
Shunt Trip Safety SwitchShunt Trip Safety Switch	V2-T1-63
NEMA 7/9—Hazardous Location Disconnect Switch	V2-T1-66
Quick Connect Switches	V2-T1-68
Solar Disconnect Switch	V2-T1-70
316-Grade Stainless Steel Safety Switches	V2-T1-72
Mill-Duty Rated, Heavy-Duty, Fusible, Non-Fusible, Single-Throw	V2-T1-76
Heavy-Duty Fusible Safety Switches Accepting Cube Fuses	V2-T1-78
Elevator Control Switch	V2-T1-81
Auxiliary Power Heavy-Duty Safety Switch	V2-T1-83
Left-Handed Safety Switch	V2-T1-86
200% Neutral Safety Switches	V2-T1-87
Pringle Bolted Pressure Switch	V2-T1-88
Type DS, Fusible and Non-Fusible	V2-T1-91
Type Visi-Flex DE-ION	V2-T1-94
Flange Mounted—Variable Depth	V2-T1-98
Flange Mounted—Fixed Depth	V2-T1-102

EnviroLine—Upper and Lower Window Switches

Product Description

The new enlarged window on 30–100A ratings allows visual blade position verification and blown fuse indication without opening the door. Higher ampere ratings continue to use the upper and lower window design. The upper window switch provides visual verification of ON/OFF status (blade position), while the lower window design shows fuse status on fuses with blown fuse indicators. Overall ratings are 30–800A, 240–600 Vac, fusible and non-fusible. Available in NEMA 12/3R, 4X stainless steel enclosures.

Features

Upper Window

- 30–800A
- Blade visibility when door closed
- 240V and 600V, fusible and non-fusible
- Suitable for service entrance use
- NEMA 12, 4 and 4X enclosures

Lower Window

- 30–600A
- Power plugs not supplied with the receptacle
- Lower viewing window over fuses to allow visual verification of blown fuse indicators for Littelfuse, Inc. fuses
- 240V and 600V, fusible
- Suitable for service entrance use
- NEMA 12, 4 and 4X enclosures

Standards and Certifications

- Upper and lower window UL listed and NEMA approved
- UL 98
- UL listed under Section 508
- UL listed File No. E165150 and E5239

Listed

Product Selection

DH361UDKW

240 Vac Heavy-Duty, Fusible Single-Throw with Upper Viewing Window

System	Ampere Rating	Fuse Class Provision	Maximum Horsepower Ratings with Time Delay Fuses — AC — Standard Fuse — Single-Phase	Standard Fuse — Three-Phase	Time Delay — Single-Phase	Time Delay — Three-Phase	DC 250V	NEMA 12 Enclosure Industrial, Dust-Tight Catalog Number	NEMA 4 Enclosure Watertight, Painted Steel Catalog Number	NEMA 4X Enclosure Corrosion-Resistant, Stainless Steel Catalog Number
Four-Wire (Three Blades, Three Fuses, S/N), 240 Vac—250 Vdc ①										
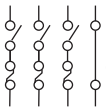 S/N	30	H	—	3	—	7-1/2	—	DH321NDKW ②	—	DH321NWKW
	60	H	—	7-1/2	—	15	—	DH322NDKW ②	—	DH322NWKW
	100	H	—	15	—	30	20	DH323NDKW ②	—	DH323NWKW
	200	H	—	25	—	60	—	DH324NDKW ②	—	DH324NWKW
	400	H	—	50	—	125	50	DH325NDKW ②	DH325NPKW	DH325NWKW
	600	H	—	75	—	200	—	DH326NDKW ②	DH326NPKW	DH326NWKW
	800	L	—	100	—	250	—	DH327NDKW ②	DH327NPKW	DH327NWKW

600 Vac Heavy-Duty, Fusible Single-Throw with Upper Viewing Window

System	Ampere Rating	Fuse Class Provision	Maximum Horsepower Ratings with Time Delay Fuses — Single-Phase AC — 480V	Single-Phase AC — 600V	Three-Phase AC — 480V	Three-Phase AC — 600V	DC 250V 600V	NEMA 12 Enclosure Industrial, Dust-Tight Catalog Number	NEMA 4 Enclosure Watertight, Painted Steel Catalog Number	NEMA 4X Enclosure Corrosion-Resistant, Stainless Steel Catalog Number
Four-Wire (Three Blades, Three Fuses, S/N), 600 Vac—250 Vdc ①										
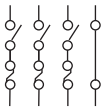 S/N	30	H	7-1/2	10	15	20	—	DH361NDKW ②	—	DH361NWKW
	60	H	20	25	30	50	—	DH362NDKW ②	—	DH362NWKW
	100	H	30	40	60	75	—	DH363NDKW ②	—	DH363NWKW
	200	H	50	50	125	150	—	DH364NDKW ②	—	DH364NWKW
	400	H	—	—	250	350	—	DH365NDKW ②	DH365NPKW	DH365NWKW
	600	H	—	—	400	500	—	DH366NDKW ②	DH366NPKW	DH366NWKW
	800	L	—	—	500	500	—	DH367NDKW ②	DH367NPKW	DH367NWKW

DH361UWKW

600 Vac Heavy-Duty, Non-Fusible Single-Throw with Upper Viewing Window

System	Ampere Rating	Maximum Horsepower Ratings — Single-Phase AC — 480V	Single-Phase AC — 600V	Three-Phase AC — 480V	Three-Phase AC — 600V	DC — 250V	DC — 600V	NEMA 12 Enclosure Industrial, Dust-Tight Catalog Number	NEMA 4 Enclosure Watertight, Painted Steel Catalog Number	NEMA 4X Enclosure Corrosion-Resistant, Stainless Steel Catalog Number
Three-Pole—600 Vac, 250 Vdc ① (Suitable for Service Entrance Use with a Neutral or Ground Lug Kit Installed)										
	30	7-1/2	10	20	30	5	—	DH361UDKW ②	—	DH361UWKW
	60	20	25	50	60	10	—	DH362UDKW ②	—	DH362UWKW
	100	40	50	75	100	20	—	DH363UDKW ②	—	DH363UWKW
	200	50	50	125	150	40	—	DH364UDKW ②	—	DH364UWKW
	400	—	—	250	350	50	—	DH365UDKW ②	DH365UPKW	DH365UWKW
	600	—	—	400	500	—	—	DH366UDKW ②	DH366UPKW	DH366UWKW
	800	—	—	500	500	—	—	DH367UDKW ②	DH367UPKW	DH367UWKW

Notes

① For two-pole applications, use outside poles of three-pole switch.

② NEMA 12 enclosures (30–800A) can be field modified to meet NEMA 3R rainproof requirements when a factory provided drain hole is opened.

30A heavy-duty switches with Type J fuse provisions are available from the factory only. See table on **Page V2-T1-18** for catalog numbers.

Effective August 2003, 30–100A window switches offer visible blade verification and blown fuse indication in a single design as shown in the photos.The window is replaceable. Higher ampere ratings will continue to be manufactured with a non-replaceable epoxy affixed design with visible blade verification only.

1

DH324NDKLW

240 Vac Heavy-Duty, Fusible, Single-Throw with Lower Viewing Window

System	Ampere Rating	Fuse Class Provision	Maximum Horsepower Ratings with Time Delay Fuses AC — Standard Fuse Single-Phase	Standard Fuse Three-Phase	Time Delay Single-Phase	Time Delay Three-Phase	DC 250V	NEMA 12 Enclosure Industrial, Dust-Tight Catalog Number	NEMA 4 Enclosure Watertight, Painted Steel Catalog Number	NEMA 4X Enclosure Corrosion-Resistant, Stainless Steel Catalog Number
Four-Wire (Three Blades, Three Fuses, S/N), 240 Vac—250 Vdc ①										
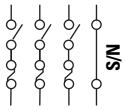	30	H	—	3	—	7-1/2	—	**DH321NDKW ②**	—	**DH321NWKW**
	60	H	—	7-1/2	—	15	—	**DH322NDKW ②**	—	**DH322NWKW**
	100	H	—	15	—	30	20	**DH323NDKW ②**	—	**DH323NWKW**
	200	H	—	25	—	60	—	**DH324NDKLW ②**	—	**DH324NWKLW**
	400	H	—	50	—	125	50	**DH325NDKLW ②**	**DH325NPKLW**	**DH325NWKLW**
	600	H	—	75	—	200	—	**DH326NDKLW ②**	**DH326NPKLW**	**DH326NWKLW**

600 Vac Heavy-Duty, Fusible, Single-Throw with Lower Viewing Window

System	Ampere Rating	Fuse Class Provision	Maximum Horsepower Ratings with Time Delay Fuses — Single-Phase AC 480V	Single-Phase AC 600V	Three-Phase AC 480V	Three-Phase AC 600V	DC 250V	NEMA 12 Enclosure Industrial, Dust-Tight Catalog Number	NEMA 4 Enclosure Watertight, Painted Steel Catalog Number	NEMA 4X Enclosure Corrosion-Resistant, Stainless Steel Catalog Number
Four-Wire (Three Blades, Three Fuses, S/N), 600 Vac—250 Vdc ①										
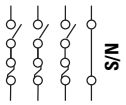	30	H	7-1/2	10	15	20	—	**DH361NDKW ②**	—	**DH361NWKW**
	60	H	20	25	30	50	—	**DH362NDKW ②**	—	**DH362NWKW**
	100	H	30	40	60	75	—	**DH363NDKW ②**	—	**DH363NWKW**
	200	H	50	50	125	150	—	**DH364NDKLW ②**	—	**DH364NWKLW**
	400	H	—	—	250	350	—	**DH365NDKLW ②**	**DH365NPKLW**	**DH365NWKLW**
	600	H	—	—	400	500	—	**DH366NDKLW ②**	**DH366NPKLW**	**DH366NWKLW**

Notes

① For two-pole applications, use outside poles of three-pole switch.

② NEMA 12 enclosures (30–600A) can be field modified to meet NEMA 3R rainproof requirements when a factory provided drain hole is opened.

Effective August 2003, 30–100A window switches are replaced by a full view window that allows blade position verification and blown fuse indication.
See table on **Page V2-T1-18** for catalog numbers.

EnviroLine/Receptacle Switch

Contents

Description	*Page*
Product Overview	**V2-T1-3**
General Duty	**V2-T1-26**
Heavy-Duty	**V2-T1-31**
Six-Pole Switches	**V2-T1-43**
Double-Throw Switches	**V2-T1-45**
EnviroLine—Stainless Steel Switch	**V2-T1-53**
EnviroLine—Upper and Lower Window Switches	**V2-T1-56**
EnviroLine—Receptacle Switches Product Selection	**V2-T1-60**
EnviroLine—Non-Metallic KRYDON Switch	**V2-T1-61**
Shunt Trip Safety SwitchShunt Trip Safety Switch	**V2-T1-63**
NEMA 7/9—Hazardous Location Disconnect Switch	**V2-T1-66**
Quick Connect Switches	**V2-T1-68**
Solar Disconnect Switch	**V2-T1-70**
316-Grade Stainless Steel Safety Switches	**V2-T1-72**
Mill-Duty Rated, Heavy-Duty, Fusible, Non-Fusible, Single-Throw	**V2-T1-76**
Heavy-Duty Fusible Safety Switches Accepting Cube Fuses	**V2-T1-78**
Elevator Control Switch	**V2-T1-81**
Auxiliary Power Heavy-Duty Safety Switch	**V2-T1-83**
Left-Handed Safety Switch	**V2-T1-86**
200% Neutral Safety Switches	**V2-T1-87**
Pringle Bolted Pressure Switch	**V2-T1-88**
Type DS, Fusible and Non-Fusible	**V2-T1-91**
Type Visi-Flex DE-ION	**V2-T1-94**
Flange Mounted—Variable Depth	**V2-T1-98**
Flange Mounted—Fixed Depth	**V2-T1-102**

EnviroLine—Receptacle Switches

Product Description

These heavy-duty switches are pre-wired and interlocked to polarized receptacles for three-phase, three-wire, grounded type power plugs. Receptacles are interlocked to handle mechanisms so that power plugs may not be inserted or removed when the switch is in the ON position unless noted otherwise. Ratings are 30–100A, 600 Vac, NEMA 12/3R, 4X stainless steel enclosures.

- 30–100A
- Power plugs not supplied with the receptacle

Application Description

These are used for portable power applications such as welders, infrared ovens, batch feeders, conveyors, truck and marine docks.

Standards and Certifications

- Upper and lower window UL listed and NEMA approved
- UL 98
- UL listed under Section 508
- UL listed File No. E165150 and E5239

Listed

1

Product Selection

600 Vac Heavy-Duty, Single-Throw with Receptacle, Fusible, Non-Fusible

DH362FDK2WR

Safety Switch with Receptacle K-Series, Three-Pole, 600 Volt Fuse Clips—Fusible

Ampere Rating			NEMA 12/3R Enclosure	NEMA 4X Enclosure
Switch	Receptacle	Power Plug	Catalog Number	Catalog Number
Crouse-Hinds ARKTITE® Receptacle				
		Accepts Crouse-Hinds®		
30	30	**APJ3485**	**DH361FDK2WR**	**DH361FWK2WR**
60	60	**APJ6485**	**DH362FDK2WR**	**DH362FWK2WR**
100	100	**APJ10487**	**DH363FDK2WR**	**DH363FWK2WR**
M-R-S (Russellstoll) MAX-GARD® Receptacle				
		Accepts Russellstoll		
30	30	**DS3404MP**	**DH361FD3WRK**	**DH361FW3WRK**
60	60	**DS6404MP**	**DH362FD3WRK**	**DH362FW3WRK**
100	100	**DS1404MP**	**DH363FD3WRK**	**DH363FW3WRK**
Appleton POWERTITE® Receptacle				
		Accepts Appleton		
30	30	**ACP3034BC**	**DH361FD5WRK**	**DH361FW5WRK**
60	60	**ACP6034BC**	**DH362FD5WRK**	**DH362FW5WRK**
100	100	**ACP1034CD**	**DH363FD5WRK**	**DH363FW5WRK**

Safety Switch with Receptacle K-Series, Three-Pole, 600 Volt Fuse Clips—Non-Fusible

Ampere Rating			NEMA 12/3R Enclosure	NEMA 4X Enclosure
Switch	Receptacle	Power Plug	Catalog Number	Catalog Number
Crouse-Hinds ARKTITE Receptacle				
		Accepts Crouse-Hinds		
60	60	**APJ6485**	**DH362UDK2WR**	**DH362UWK2WR**
Appleton POWERTITE Receptacle				
		Accepts Appleton		
30	30	**ACP3034BC**	**DH361UD5WRK**	—
60	60	**ACP6034BC**	**DH362UD5WRK**	**DH362UW5WRK**

Notes

Contact the Safety Switch Flex Center (**1-888-329-9272** or FlexSwitches@eaton.com) for additional options including viewing windows and other receptacle manufacturers. Power plugs are not available through Eaton.

EnviroLine/Non-Metallic KRYDON Switch

Contents

Description	*Page*
Product Overview	**V2-T1-3**
General Duty	**V2-T1-26**
Heavy-Duty	**V2-T1-31**
Six-Pole Switches	**V2-T1-43**
Double-Throw Switches	**V2-T1-45**
EnviroLine—Stainless Steel Switch	**V2-T1-53**
EnviroLine—Upper and Lower Window Switches	**V2-T1-56**
EnviroLine—Receptacle Switches	**V2-T1-59**
EnviroLine—Non-Metallic KRYDON Switch	
Product Selection	**V2-T1-62**
Shunt Trip Safety SwitchShunt Trip Safety Switch	**V2-T1-63**
NEMA 7/9—Hazardous Location Disconnect Switch	**V2-T1-66**
Quick Connect Switches	**V2-T1-68**
Solar Disconnect Switch	**V2-T1-70**
316-Grade Stainless Steel Safety Switches	**V2-T1-72**
Mill-Duty Rated, Heavy-Duty, Fusible, Non-Fusible, Single-Throw	**V2-T1-76**
Heavy-Duty Fusible Safety Switches Accepting Cube Fuses	**V2-T1-78**
Elevator Control Switch	**V2-T1-81**
Auxiliary Power Heavy-Duty Safety Switch	**V2-T1-83**
Left-Handed Safety Switch	**V2-T1-86**
200% Neutral Safety Switches	**V2-T1-87**
Pringle Bolted Pressure Switch	**V2-T1-88**
Type DS, Fusible and Non-Fusible	**V2-T1-91**
Type Visi-Flex DE-ION	**V2-T1-94**
Flange Mounted—Variable Depth	**V2-T1-98**
Flange Mounted—Fixed Depth	**V2-T1-102**

EnviroLine—Non-Metallic KRYDON Switch

Product Description

This switch has a KRYDON™ enclosure. These are compression molded fiberglass reinforced polyester enclosure, which is capable of withstanding almost any corrosive environment. Ratings are 30–200A, 240–600 Vac, fusible and non-fusible. Enclosure is NEMA 4X rated.

Features

- 30–200A
- KRYDON high-impact strength fiberglass reinforced polyester material
- Horsepower rated
- Suitable for service entrance use
- Fusible and non-fusible

Standards and Certifications

- Upper and lower window UL listed and NEMA approved
- UL 98
- UL listed under Section 508
- UL listed File No. E165150 and E5239

Listed

1 **Product Selection**

DH361UCK

240 Vac Heavy-Duty Non-Metallic Fusible

System	Ampere Rating	Fuse Class Provision	Maximum Horsepower Ratings AC Standard Fuse Single-Phase	Three-Phase	Time Delay Single-Phase	Three-Phase	DC 250V	NEMA 4X Enclosure Corrosion-Resistant, Non-Metallic Catalog Number
Three-Pole, 240 Vac—250 Vdc (Suitable for Service Entrance Use with a Neutral Kit Installed)								
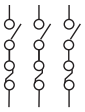	30	H	1-1/2	3	—	7-1/2	—	**DH321FCK**
	60	H	3	7-1/2	—	15	—	**DH322FCK**
	100	H	7-1/2	15	—	30	20	**DH323FCK**
	200	H	15	25	—	60	40	**DH324FCK**
Four-Wire (Three Blades, Three Fuses, S/N), 240 Vac—250 Vdc								
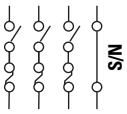	30	H	—	3	—	7-1/2	—	**DH321NCK**
	60	H	—	7-1/2	—	15	—	**DH322NCK**
	100	H	—	15	—	30	20	**DH323NCK**
	200	H	—	25	—	60	—	**DH324NCK**

240 Vac Heavy-Duty Non-Metallic Fusible

System	Ampere Rating	Fuse Class Provision	Maximum Horsepower Ratings with Time Delay Fuses Single-Phase AC 480V	600V	Three-Phase AC 480V	600V	DC 250V	600V	NEMA 4X Enclosure Corrosion-Resistant, Non-Metallic Catalog Number
Three-Pole, 480 Vac—600 Vac, 250 Vdc (Suitable for Service Entrance Use with a Neutral Kit Installed)									
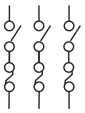	30	H	7-1/2	10	15	20	—	—	**DH361FCK**
	60	H	20	25	30	50	—	—	**DH362FCK**
	100	H	30	30	60	75	—	—	**DH363FCK**
	200	H	50	50	125	150	—	—	**DH364FCK**
Four-Wire (Three Blades, Three Fuses, S/N), 480 Vac—600 Vac, 250 Vdc									
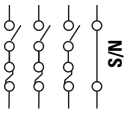	30	H	7-1/2	10	15	20	—	—	**DH361NCK**
	60	H	20	25	30	50	—	—	**DH362NCK**
	100	H	30	30	60	75	—	—	**DH363NCK**
	200	H	50	50	125	150	—	—	**DH364NCK**

240 Vac Heavy-Duty Non-Metallic Non-Fusible 277/480–600V

System	Ampere Rating	Maximum Horsepower Ratings with Time Delay Fuses Single-Phase AC 240V	480V	600V	Three-Phase AC 240V	480V	600V	DC 250V	600V	NEMA 4X Enclosure Corrosion-Resistant, Non-Metallic Catalog Number
Three-Pole, 480 Vac—600 Vac, 250 Vdc (Suitable for Service Entrance Use with a Neutral Kit Installed)										
	30	3	7-1/2	10	10	20	30	5	—	**DH361UCK**
	60	10	20	25	20	50	60	10	—	**DH362UCK**
	100	20	40	50	40	75	100	20	—	**DH363UCK**
	200	15	50	50	60	125	150	40	—	**DH364UCK**

Note

30A heavy-duty switches with Type J fuse provisions are available from the factory only. See table on **Page V2-T1-18** for catalog numbers.

Shunt Trip Safety Switch

Contents

Description	*Page*
Product Overview	**V2-T1-3**
General Duty	**V2-T1-26**
Heavy-Duty	**V2-T1-31**
Six-Pole Switches	**V2-T1-43**
Double-Throw Switches	**V2-T1-45**
EnviroLine—Stainless Steel Switch	**V2-T1-53**
EnviroLine—Upper and Lower Window Switches	**V2-T1-56**
EnviroLine—Receptacle Switches	**V2-T1-59**
EnviroLine—Non-Metallic KRYDON Switch Product Selection	**V2-T1-62**
Shunt Trip Safety SwitchShunt Trip Safety Switch	
Features	**V2-T1-64**
Options	**V2-T1-64**
Standards and Certifications	**V2-T1-64**
Catalog Number Selection	**V2-T1-64**
Technical Data and Specifications	**V2-T1-65**
Dimensions	**V2-T1-65**
NEMA 7/9—Hazardous Location Disconnect Switch	**V2-T1-66**
Quick Connect Switches	**V2-T1-68**
Solar Disconnect Switch	**V2-T1-70**
316-Grade Stainless Steel Safety Switches	**V2-T1-72**
Mill-Duty Rated, Heavy-Duty, Fusible, Non-Fusible, Single-Throw	**V2-T1-76**
Heavy-Duty Fusible Safety Switches Accepting Cube Fuses	**V2-T1-78**
Elevator Control Switch	**V2-T1-81**
Auxiliary Power Heavy-Duty Safety Switch	**V2-T1-83**
Left-Handed Safety Switch	**V2-T1-86**
200% Neutral Safety Switches	**V2-T1-87**
Pringle Bolted Pressure Switch	**V2-T1-88**
Type DS, Fusible and Non-Fusible	**V2-T1-91**
Type Visi-Flex DE-ION	**V2-T1-94**
Flange Mounted—Variable Depth	**V2-T1-98**
Flange Mounted—Fixed Depth	**V2-T1-102**

Shunt Trip Safety Switch

Product Description

Eaton's tried and true heavy-duty safety switch line expands to include shunt trip capability—remote switching and visible means of disconnect for commercial and industrial applications.

The shunt trip technology enhances safety by providing a means to open a safety switch electronically. When using an emergency stop, safety interlock or similar means, the remote operation capability of the shunt trip switch no longer requires personnel to manually open the switch with the handle, enhancing safety and improving productivity.

The shunt trip safety switch builds on Eaton's extensive portfolio of safety switch solutions, incorporating a side-handle operation mechanism and visible blade indication that have decades of successful installation and operation.

Application Description

The shunt trip safety switch can be configured to meet the needs of safety applications in industrial and commercial environments. The switches can be signaled to electronically operate the trip mechanism and interrupt the flow of power when a defined electrical condition is detected via protection relay (for example, ground fault, undervoltage, blown fuse shutdown).

Application Examples

- E-stop
- Safety interlocking
- Machinery OEM interlocking
- Remote opening (distant from switch)
- Cost-effective solution for high-interrupt applications
- Ground fault ①
- Phase reversal / phase loss ①
- Blown fuse shutdown ①
- Undervoltage release ①

Note

① Shunt trip switch provides solenoid/coil to facilitate shunt trip, specific relay and applicable power supply provided by others.

Features

- Variety of coil voltages available
- Visible means of disconnect
- Standard heavy-duty safety switch design with integrated shunt trip module
- Passes Class 1 ground fault testing (1200% opening)
- 30–800 A (240–600 Vac) ①
- Horsepower ratings are the same as Eaton's standard heavy-duty safety switches
- Fusible devices have short-circuit ratings of up to 200 kAIC

Options

Flex Center modifications available, such as viewing windows, pilot lights and more.

Standards and Certifications

- UL 98 file number E5239 (600 Vac maximum)
- CSA C22.2 No. 4, file number LL69743 (600 Vac maximum)
- Enclosure ratings: NEMA 12/3R, 4 (painted steel), 4X (stainless steel)

Listed

Catalog Number Selection

Shunt Trip Safety Switch

STS 3 6 4 U D 3 2 _

Switch Series
STS = Shunt trip switch (UL)
CTS = Shunt trip switch (CSA)

Number of Poles
2 = Two-pole
3 = Three-pole
4 = Four-pole

Maximum System Voltage
2 = 240 Vac
6 = 600 Vac

Ampere Rating
1 = 30 A
2 = 60 A
3 = 100 A
4 = 200 A
5 = 400 A
6 = 600 A
7 = 800 A

Protection
F = Fusible without neutral
N = Fusible with neutral
U = Non-fusible

NEMA Enclosure Rating
D = NEMA 12/3R
P = NEMA 4 (painted steel)
W = NEMA 4X (stainless steel 304)
X = NEMA 4X (stainless steel 316)

Shunt Trip Coil Voltage
1 = 24 Vac
2 = 48 Vac
3 = 120 Vac
4 = 240 Vac
5 = 480 Vac
6 = 24 Vdc
7 = 48 Vdc
8 = 125 Vdc

Auxiliary Switch
Blank = No auxiliary switches
1 = 1NO/1NC alarm switch only
2 = 1NO/1NC auxiliary contact only
3 = 2NO/2NC auxiliary contacts only
4 = 1NO/1NC auxiliary contact and 1NO/1NC alarm switch
5 = 2NO/2NC auxiliary contacts and 1NO/1NC alarm switch

Accessories/Options
Blank = No accessories
CL = Copper lugs
CP = Control pole
J = Factory-converted provisions for Class J fusing
N = Factory-installed neutral for non-fused switch
T = Factory-converted provisions for Class T fusing
W = Viewing window within door

Note

① Contact factory for availability of 1200 A switch.

Technical Data and Specifications

Shunt Trip Safety Switch—240 Vac and 600 Vac—Ratings

Ampere Rating	Fuse Class ①	Number of Poles
Fusible		
30	H	2, 3 or 4 ②
60	H	2, 3 or 4 ②
100	H	2, 3 or 4 ②
200	H	2, 3 or 4
400	H	2, 3 or 4
600	H	2, 3
800	L	2, 3
Non-Fusible		
30	—	2, 3 or 4 ②
60	—	2, 3 or 4 ②
100	—	2, 3 or 4 ②
200	—	2, 3 or 4
400	—	2, 3 or 4
600	—	2, 3
800	—	2, 3

Terminal/Lug Wire Range

Ampere Rating	Minimum—Maximum	Wire Type
30	#14–#2	Cu/Al
60	#14–#2	Cu/Al
100	#14–1/0	Cu/Al
200	#6–300 kcmil	Cu/Al
400	(2) 1/0–300 kcmil or (1) 1/0–750 kcmil	Cu/Al
600	(1) #2–600 kcmil and (1) 1/0–750 kcmil	Cu/Al
800	(4) 1/0–750 kcmil	Cu/Al

Dimensions

Approximate Dimensions in Inches (mm)

Shunt Trip Safety Switch—240 Vac and 600 Vac

Ampere Rating	Enclosure Dimensions ③, Exterior Height (H)	Width (W)	Depth (D_1)	Depth (D_2)
Fusible				
30	21.58 (548.1)	11.58 (294.1)	11.43 (290.3)	5.58 (141.7)
60	21.58 (548.1)	11.58 (294.1)	11.43 (290.3)	5.58 (141.7)
100	24.95 (633.7)	14.89 (378.2)	11.51 (282.4)	5.58 (141.7)
200	35.38 (898.7)	20.11 (510.8)	11.61 (294.9)	6.45 (163.8)
400	57.47 (1459.7)	27.29 (693.2)	12.43 (315.7)	7.42 (188.5)
600	62.97 (1599.4)	28.29 (718.6)	12.43 (315.7)	7.42 (188.5)
800	71.72 (1821.7)	29.54 (750.3)	12.43 (315.7)	7.42 (188.5)
Non-Fusible				
30	21.58 (548.1)	11.58 (294.1)	11.43 (290.3)	5.58 (141.7)
60	21.58 (548.1)	11.58 (294.1)	11.43 (290.3)	5.58 (141.7)
100	24.95 (633.7)	14.89 (378.2)	11.51 (282.4)	5.58 (141.7)
200	35.38 (898.7)	20.11 (510.8)	11.61 (294.9)	6.45 (163.8)
400	57.47 (1459.7)	27.29 (693.2)	12.43 (315.7)	7.42 (188.5)
600	62.97 (1599.4)	28.29 (718.6)	12.43 (315.7)	7.42 (188.5)
800	71.72 (1821.7)	29.54 (750.3)	12.43 (315.7)	7.42 (188.5)

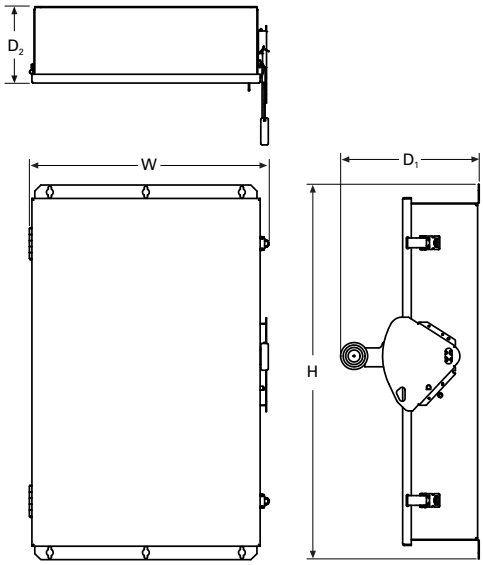

Notes

① Class H fuse clips supplied as standard on fusible devices 30–600 A, Class L for 800 A; Class R, J, T fuse clips available.

② Four-pole devices are wider than dimension for 30, 60 and 100 A devices. Consult factory for details.

③ Accurate for all enclosure NEMA type ratings—12/3R, 4, 4X stainless steel.

For additional technical information, please refer to Technical Data TD008003EN.

DS361UX

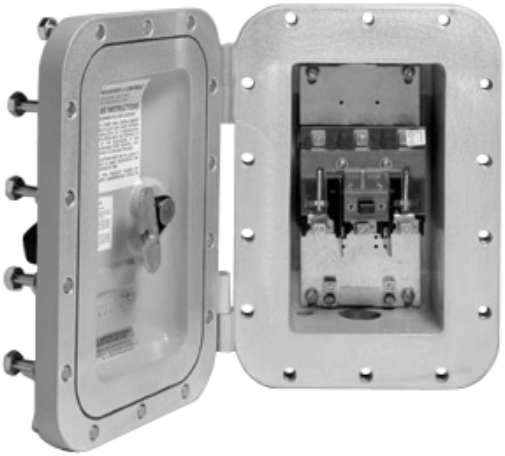

Contents

Description	Page
Product Overview	V2-T1-3
General Duty	V2-T1-26
Heavy-Duty	V2-T1-31
Six-Pole Switches	V2-T1-43
Double-Throw Switches	V2-T1-45
EnviroLine—Stainless Steel Switch	V2-T1-53
EnviroLine—Upper and Lower Window Switches	V2-T1-56
EnviroLine—Receptacle Switches	V2-T1-59
EnviroLine—Non-Metallic KRYDON Switch	V2-T1-61
Shunt Trip Safety SwitchShunt Trip Safety Switch	V2-T1-63
NEMA 7/9—Hazardous Location Disconnect Switch	
Product Selection	V2-T1-67
Dimensions	V2-T1-67
Quick Connect Switches	V2-T1-68
Solar Disconnect Switch	V2-T1-70
316-Grade Stainless Steel Safety Switches	V2-T1-72
Mill-Duty Rated, Heavy-Duty, Fusible, Non-Fusible, Single-Throw	V2-T1-76
Heavy-Duty Fusible Safety Switches Accepting Cube Fuses	V2-T1-78
Elevator Control Switch	V2-T1-81
Auxiliary Power Heavy-Duty Safety Switch	V2-T1-83
Left-Handed Safety Switch	V2-T1-86
200% Neutral Safety Switches	V2-T1-87
Pringle Bolted Pressure Switch	V2-T1-88
Type DS, Fusible and Non-Fusible	V2-T1-91
Type Visi-Flex DE-ION	V2-T1-94
Flange Mounted—Variable Depth	V2-T1-98
Flange Mounted—Fixed Depth	V2-T1-102

NEMA 7/9—Hazardous Location Disconnect Switch

Product Description

Eaton's Type DS switch is used as the switching device. Ratings are 30–100A, 600 Vac, fusible and non-fusible.

Application Description

The cast aluminum enclosure is ideally suited for harsh industrial applications including petrochemical facilities, mining operations, pharmaceutical plants and wastewater treatment facilities.

Features

- 30–100A
- 600 Vac fusible and non-fusible
- See **Page V2-T1-66** for information
- For factory modifications, refer to **Pages V2-T1-16** through **V2-T1-19**

Standards and Certifications

- Upper and lower window UL listed and NEMA approved
- UL 98
- UL listed under Section 508
- UL listed File No. E165150 and E5239

Compliances

UL Classified—Standard 886 File No. E84577	CSA Certified—Standard C22.2 File No. LR 42131-6
Class I, Division 1 and 2, Groups B, C and D	Class I, Division 1 and 2, Groups B, C and D
Class II, Division 1 and 2, Groups E, F and G	Class II, Division 1 and 2, Groups E, F and G
Class III, Division 1 and 2	Class III, Division 1 and 2
NEMA 7/9	NEMA 7/9
Zone 1, IIB + H_2	Zone 1, IIB + H_2

c UL Listed

Product Selection

DS361UX

NEMA 7/9 Enclosure Sizes—Fusible

Ampere Rating	Maximum Horsepower Ratings Three-Phase AC 480V	600V	DC 250V	Fuse Class Provision	Number of Poles	Voltage	Enclosure Number	Catalog Number
30	15	20	5	J	3	600 Vac, 125/250 Vdc	1	**DS361FX**
60	30	50	10	J	3	600 Vac, 125/250 Vdc	2	**DS362FX**
100	60	75	20	J	3	600 Vac, 125/250 Vdc	3	**DS363FX**

NEMA 7/9 Enclosure Sizes—Non-Fusible

Ampere Rating	Maximum Horsepower Ratings Three-Phase AC 480V	600V	DC 250V	Fuse Class Provision	Number of Poles	Voltage	Enclosure Number	Catalog Number
30	15	20	5	—	3	600 Vac, 125/250 Vdc	1	**DS361UX**
60	30	50	10	—	3	600 Vac, 125/250 Vdc	1	**DS362UX**
100	60	75	20	—	3	600 Vac, 125/250 Vdc	2	**DS363UX**

Dimensions

Approximate Dimensions in Inches (mm)

NEMA 7/9 Enclosure Sizes

Catalog Number	Standard Conduit Size
DS361FX	1.50 (38.1)
DS362FX	2.00 (50.8)
DS363FX	2.50 (63.5)
DS361UX	1.50 (38.1)
DS362UX	1.50 (38.1)
DS363UX	2.00 (50.8)

NEMA 7/9 ①

Enclosure Number	Mounting Dimensions A	B	J	Inside Dimensions C	D	Outside Dimensions F	G	H	Number of Outlets	Dimension K	Approximate Weight Lbs (kg)
1	5.50 (139.7)	13.13 (333.5)	14.13 (358.9)	5.94 (150.9)	10.75 (273.1)	10.63 (270.0)	15.25 (387.4)	8.84 (224.5)	2	2.00 (50.8)	38 (17)
2	6.00 (152.4)	18.00 (457.2)	19.00 (482.6)	6.50 (165.1)	16.00 (406.4)	11.00 (279.4)	20.50 (520.7)	8.97 (227.8)	2	2.31 (58.6)	57 (26)
3	10.25 (260.4)	22.63 (574.8)	—	11.75 (298.4)	20.00 (508.0)	16.38 (416.1)	25.13 (638.3)	9.59 (243.6)	2	3.50 (88.9)	104 (47)

NEMA 7/9—30–100A ②

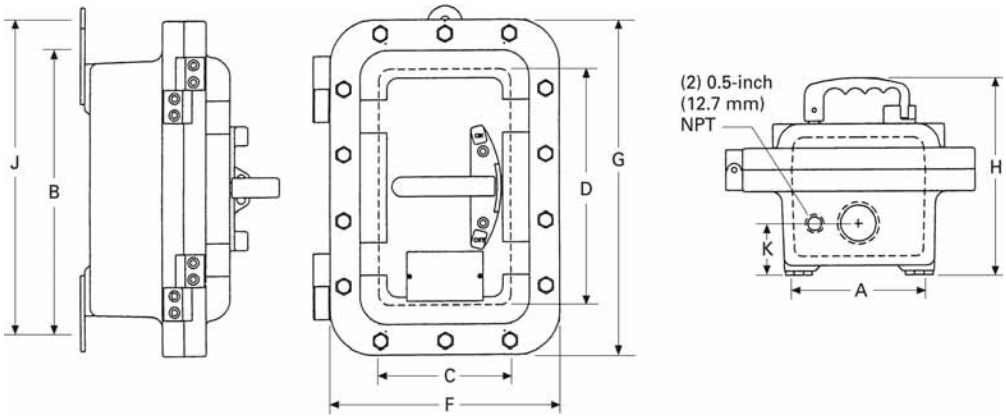

Notes

① Accessories and modifications shown on **Pages V2-T1-16** through **V2-T1-19** are NOT applicable to NEMA 7/9 disconnect switches.

② Dual three- and four-point mounting available as standard on enclosures 1 and 2.

DH3665NURKLP and Quick Connect Double Throw Switches

Contents

Description	Page
Product Overview	V2-T1-3
General Duty	V2-T1-26
Heavy-Duty	V2-T1-31
Six-Pole Switches	V2-T1-43
Double-Throw Switches	V2-T1-45
EnviroLine—Stainless Steel Switch	V2-T1-53
EnviroLine—Upper and Lower Window Switches	V2-T1-56
EnviroLine—Receptacle Switches	V2-T1-59
EnviroLine—Non-Metallic KRYDON Switch	V2-T1-61
Shunt Trip Safety SwitchShunt Trip Safety Switch	V2-T1-63
NEMA 7/9—Hazardous Location Disconnect Switch	V2-T1-66
Quick Connect Switches Catalog Number Selection	V2-T1-69
316-Grade Stainless Steel Safety Switches	V2-T1-72
Mill-Duty Rated, Heavy-Duty, Fusible, Non-Fusible, Single-Throw	V2-T1-76
Heavy-Duty Fusible Safety Switches Accepting Cube Fuses	V2-T1-78
Elevator Control Switch	V2-T1-81
Auxiliary Power Heavy-Duty Safety Switch	V2-T1-83
Left-Handed Safety Switch	V2-T1-86
200% Neutral Safety Switches	V2-T1-87
Pringle Bolted Pressure Switch	V2-T1-88
Type DS, Fusible and Non-Fusible	V2-T1-91
Type Visi-Flex DE-ION	V2-T1-94
Flange Mounted—Variable Depth	V2-T1-98
Flange Mounted—Fixed Depth	V2-T1-102

Quick Connect Switches

Product Description

240V, 600 Vac Heavy-Duty, Single-Throw with Cam-Lok or Posi-Lok Receptacles, Fusible, Non-Fusible

- 30–800A
- NEMA 1 or 3R enclosures
- Provision for 200% neutral
- Non-magnetic metal mounting plate
- Crouse-Hinds "J" Power Series E1015, E1016, E1017 cam connectors
- Crouse-Hinds E200, E400 Posi-Lok panels
- Connector plugs are typically not provided, but may be special ordered

Features

Eaton's individual cable connector receptacle switches provide a convenient and safe way to quickly connect and disconnect portable equipment. The load side terminals are factory wired to individual receptacles located behind an interlocked door for added safety. The switch cannot be turned to the ON position without first closing the receptacle compartment door.

A spring-loaded flap door in the receptacle compartment allows the cables to exit the compartment, but seals the compartment when the switch is not in use. For outdoor applications, this will reduce the possibility of insects building nests in the receptacle compartment.

- Available in double-throw and single-throw designs
- Single-throw receptacles can wire to line or load side
- Service entrance rated

An additional flap door on the main compartment allows for quick connection in the event that the appropriate plugs are not readily available.

Standards and Certifications

- UL listed File No. E5239
- UL listed short-circuit rating of 10,000A rms symmetrical

Listed

Product Selection

For price and availability, contact the Switching Device Flex Center at 1-888-329-9272 or FlexSwitches@eaton.com.

Catalog Number Selection

Quick Connect Double-Throw

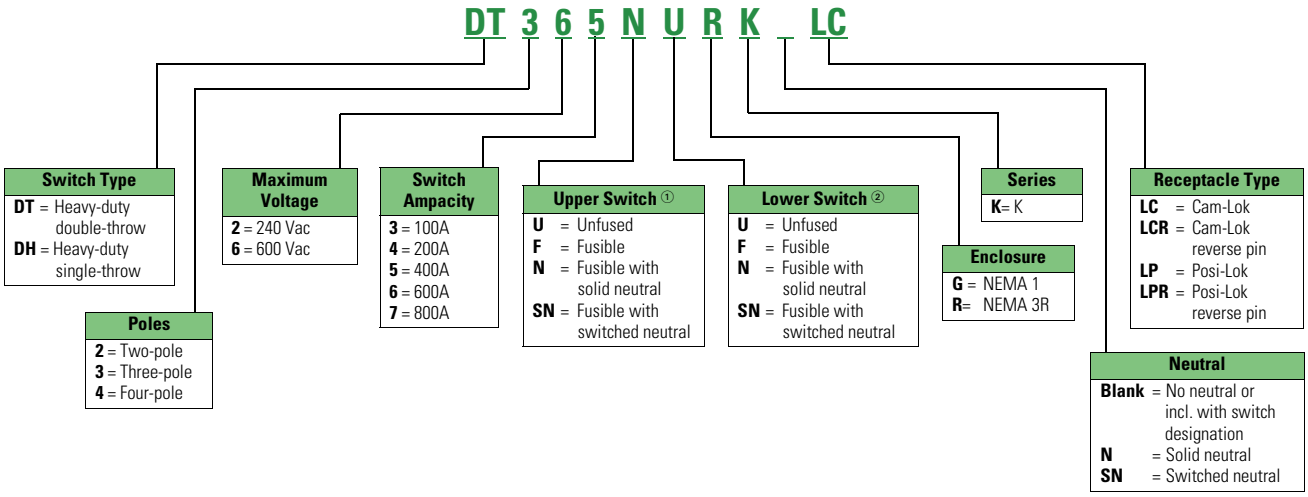

Notes

① When upper and lower switches are the same, the switch configuration is consolidated in one letter (e.g., "U" not "UU"). Also, a switch with a neutral will have either a solid neutral or a switched neutral, not both. Lastly, a switched neutral pole is never fused.

② This field is only used when a switch is completely non-fused.

This table is intended for use in breaking down existing catalog numbers. It is not intended for building new catalog numbers.

Solar Disconnect Switch

Contents

Description	*Page*
Product Overview	**V2-T1-3**
General Duty	**V2-T1-26**
Heavy-Duty	**V2-T1-31**
Six-Pole Switches	**V2-T1-43**
Double-Throw Switches	**V2-T1-45**
EnviroLine—Stainless Steel Switch	**V2-T1-53**
EnviroLine—Upper and Lower Window Switches	**V2-T1-56**
EnviroLine—Receptacle Switches	**V2-T1-59**
EnviroLine—Non-Metallic KRYDON Switch	**V2-T1-61**
NEMA 7/9—Hazardous Location Disconnect Switch	**V2-T1-66**
Quick Connect Switches	**V2-T1-68**
Solar Disconnect Switch	
Standards and Certifications	**V2-T1-71**
Product Selection	**V2-T1-71**
316-Grade Stainless Steel Safety Switches	**V2-T1-72**
Mill-Duty Rated, Heavy-Duty, Fusible, Non-Fusible, Single-Throw	**V2-T1-76**
Heavy-Duty Fusible Safety Switches Accepting Cube Fuses	**V2-T1-78**
Elevator Control Switch	**V2-T1-81**
Auxiliary Power Heavy-Duty Safety Switch	**V2-T1-83**
Left-Handed Safety Switch	**V2-T1-86**
200% Neutral Safety Switches	**V2-T1-87**
Pringle Bolted Pressure Switch	**V2-T1-88**
Type DS, Fusible and Non-Fusible	**V2-T1-91**
Type Visi-Flex DE-ION	**V2-T1-94**
Flange Mounted—Variable Depth	**V2-T1-98**
Flange Mounted—Fixed Depth	**V2-T1-102**

Solar Disconnect Switch

Product Description

600 Vdc Heavy-Duty Fusible and Non-Fusible

- 30–600A
- Single-pole switch capable of switching 1-600 Vdc circuit

Features

- Clear line-shield covering all live parts
- For factory modifications, refer to **Pages V2-T1-16** through **V2-T1-19**

600 Vdc Heavy-Duty Fusible and Non-Fusible

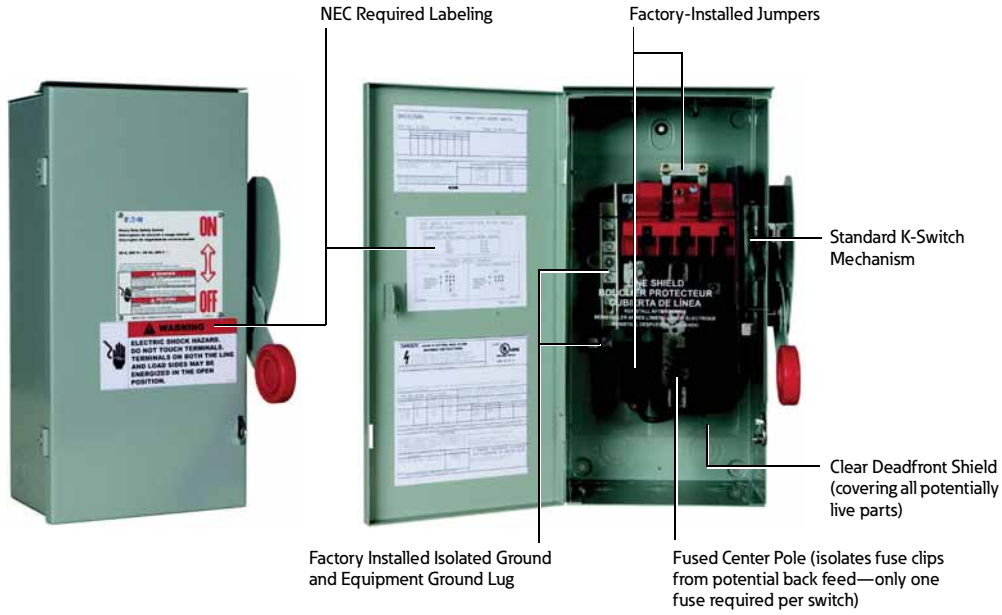

Standards and Certifications

- UL 98 listed, File No. E5239 and marked suitable for NEC Article 690 applications to UL 1741

Listed

Product Selection

NEMA 3R

Ampere Rating	Catalog Number	Fuse Class
30	**DH161NRK**	R
30	**DH161URKN**	R
60	**DH162NRK**	R
60	**DH162URKN**	R
100	**DH163NRK**	R
100	**DH163URKN**	R
200	**DH164NRK**	R
200	**DH164URKN**	R
400	**DH165NRK**	R
400	**DH165URKN**	R
600	**DH166NRK**	R
600	**DH166URKN**	R

NEMA 4X

Ampere Rating	Catalog Number	Fuse Class
30	**DH161NWK**	R
30	**DH161UWKN**	R
60	**DH162NWK**	R
60	**DH162UWKN**	R
100	**DH163NWK**	R
100	**DH163UWKN**	R
200	**DH164NWK**	R
200	**DH164UWKN**	R
400	**DH165NWK**	R
400	**DH165UWKN**	R
600	**DH166NWK**	R
600	**DH166UWKN**	R

NEMA 12

Ampere Rating	Catalog Number	Fuse Class
30	**DH161NDK**	R
30	**DH161UDKN**	R
60	**DH162NDK**	R
60	**DH162UDKN**	R
100	**DH163NDK**	R
100	**DH163UDKN**	R
200	**DH164NDK**	R
200	**DH164UDKN**	R
400	**DH165NDK**	R
400	**DH165UDKN**	R
600	**DH166NDK**	R
600	**DH166UDKN**	R

DH362NWK316

Contents

Description	*Page*
Product Overview	**V2-T1-3**
General Duty	**V2-T1-26**
Heavy-Duty	**V2-T1-31**
Six-Pole Switches	**V2-T1-43**
Double-Throw Switches	**V2-T1-45**
EnviroLine—Stainless Steel Switch	**V2-T1-53**
EnviroLine—Upper and Lower Window Switches	**V2-T1-56**
EnviroLine—Receptacle Switches	**V2-T1-59**
EnviroLine—Non-Metallic KRYDON Switch	**V2-T1-61**
Shunt Trip Safety SwitchShunt Trip Safety Switch	**V2-T1-63**
NEMA 7/9—Hazardous Location Disconnect Switch	**V2-T1-66**
Quick Connect Switches	**V2-T1-68**
Solar Disconnect Switch	**V2-T1-70**
316-Grade Stainless Steel Safety Switches Product Selection	**V2-T1-73**
Mill-Duty Rated, Heavy-Duty, Fusible, Non-Fusible, Single-Throw	**V2-T1-76**
Heavy-Duty Fusible Safety Switches Accepting Cube Fuses	**V2-T1-78**
Elevator Control Switch	**V2-T1-81**
Auxiliary Power Heavy-Duty Safety Switch	**V2-T1-83**
Left-Handed Safety Switch	**V2-T1-86**
200% Neutral Safety Switches	**V2-T1-87**
Pringle Bolted Pressure Switch	**V2-T1-88**
Type DS, Fusible and Non-Fusible	**V2-T1-91**
Type Visi-Flex DE-ION	**V2-T1-94**
Flange Mounted—Variable Depth	**V2-T1-98**
Flange Mounted—Fixed Depth	**V2-T1-102**

316-Grade Stainless Steel Safety Switches

Product Description

Premium 316-Grade stainless steel enclosures are available through the Flex Center. In general, 316-Grade stainless steel offers better corrosion resistance in the presence of most chemicals, salts and acids, and is more resistant to marine atmospheres. Pitting corrosion is also reduced in environments where brines, halogen salts and chlorides are present. 316-Grade stainless steel is often a desirable choice for waste-water treatment plants and petrochemical facilities.

Features

- Stainless steel enclosure (316-Grade)
- 30–1200A
- Horsepower rated
- Suitable for service entrance use
- For factory modifications, refer to **Pages V2-T1-16** through **V2-T1-19**

Standards and Certifications

- UL listed File No. E5239

Listed

Product Selection

240 Vac Fusible—316 Grade Stainless Steel NEMA 4X

System	Ampere Rating	Fuse Type Provision	Maximum Horsepower Ratings AC Standard Fuse Single-Phase	Three-Phase	Time Delay Single-Phase	Three-Phase	DC 250V	NEMA 4X Enclosure Corrosion-Resistant, Stainless Steel Catalog Number
Three-Wire (Two Blades, Two Fuses, S/N)—240 Vac, 250 Vdc								
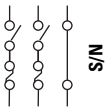	30	H	1-1/2	3 ①	3	7-1/2 ①	5	**DH221NWK316**
	60	H	3	7-1/2 ①	10	15 ①	10	**DH222NWK316**
	100	H	7-1/2	15 ①	15	30 ①	20	**DH223NWK316**
	200	H	15	25 ①	15	60 ①	40	**DH224NWK316**
	400	H	—	50 ①	15	125 ①	50	**DH225NWK316**
	600	H	—	75 ①	—	200 ①	—	**DH226NWK316**
	800	L	—	100 ①	—	—	—	**DH227NWK316**
Three-Pole—240 Vac, 250 Vdc (Suitable for Service Entrance Use with a Neutral Kit Installed)								
	30	H	1-1/2	3	—	7-1/2	—	**DH321FWK316**
	60	H	3	7-1/2	—	15	—	**DH322FWK316**
	100	H	7-1/2	15	—	30	20	②
	200	H	15	25	—	60	40	**DH324FWK316**
	400	H	—	50	—	125	50	**DH325FWK316**
	600	H	—	75	—	200	—	**DH326FWK316**
	800	L	—	100	—	250	—	**DH327FWK316**
	1200	L	—	—	—	—	—	**DH328FWK316**
Four-Wire (Three Blades, Three Fuses, S/N)—240 Vac, 250 Vdc								
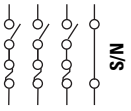	30	H	—	3	—	7-1/2	—	**DH321NWK316**
	60	H	—	7-1/2	—	15	—	**DH322NWK316**
	100	H	—	15	—	30	20	**DH323NWK316**
	200	H	—	25	—	60	—	**DH324NWK316**
	400	H	—	50	—	125	50	**DH325NWK316**
	600	H	—	75	—	200	—	**DH326NWK316**
	800	L	—	100	—	250	—	②
	1200	L	—	—	—	—	—	**DH328NWK316**

Notes

① Grounded B phase ratings, UL listed.

② Contact the Safety Switch Flex Center (**1-888-329-9272** or FlexSwitches@eaton.com) for availability of this product.

Operating mechanism is standard plated steel. For type 304 stainless steel operating mechanism, contact the Safety Switch Flex Center (**1-888-329-9272** or FlexSwitches@eaton.com).

1

DH362NWK316

600 Vac Fusible—316 Grade Stainless Steel NEMA 4X

System	Ampere Rating	Fuse Class Provision	Maximum Horsepower Ratings with Time Delay Fuses: Single-Phase AC 480V	Single-Phase AC 600V	Three-Phase AC 480V	Three-Phase AC 600V	DC 250V	DC 600V	NEMA 4X Enclosure Corrosion-Resistant, Stainless Steel Catalog Number
Two-Pole—480 Vac—600 Vac or DC ① (Suitable for Service Entrance Use with a Neutral Kit Installed)									
	30	H	7-1/2	10	—	—	—	15	**DH261FWK316**
	60	H	20	25	—	—	—	25	② **or** ③
	100	H	30	40	—	—	20	—	② **or** ③
	200	H	50	50	—	—	—	50	**DH264FWK316**
	400	H	—	—	—	—	50	—	② **or** ③
	600	H	—	—	—	—	—	—	② **or** ③
	800	L	—	—	—	—	—	—	② **or** ③
	1200	L	—	—	—	—	—	—	③
Three-Pole—480 Vac—600 Vac, 250 Vdc (Suitable for Service Entrance Use with a Neutral Kit Installed)									
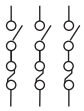	30	H	7-1/2	10	15	20	—	—	**DH361FWK316**
	60	H	20	25	30	50	—	—	**DH362FWK316**
	100	H	30	40	60	75	—	—	**DH363FWK316**
	200	H	50	50	125	150	—	—	**DH364FWK316**
	400	H	—	—	250	350	—	—	**DH365FWK316**
	600	H	—	—	400	500	—	—	**DH366FWK316**
	800	L	—	—	500	500	—	—	**DH367FWK316**
	1200	L	—	—	—	—	—	—	**DH368FWK316**
Four-Wire (Three Blades, Three Fuses, S/N) 480 Vac—600 Vac, 250 Vdc									
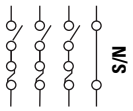	30	H	7-1/2	10	15	20	—	—	**DH361NWK316**
	60	H	20	25	30	50	—	—	**DH362NWK316**
	100	H	30	40	60	75	—	—	**DH363NWK316**
	200	H	50	50	125	150	—	—	**DH364NWK316**
	400	H	—	—	250	350	—	—	**DH365NWK316**
	600	H	—	—	400	500	—	—	**DH366NWK316**
	800	L	—	—	500	500	—	—	③
	1200	L	—	—	—	—	—	—	**DH368NWK316**

Notes

① DC rating for 400–800A switches is 250V.

② Use three-pole catalog numbers below for 600 Vac, 250 Vdc maximum applications. For 600 Vdc, see note ③.

③ Contact the Safety Switch Flex Center (**1-888-329-9272** or FlexSwitches@eaton.com) for availability of this product.

600 Vac Non-Fusible Three-Pole—316 Grade Stainless Steel NEMA 4X

System	Ampere Rating	Maximum Horsepower Ratings Single-Phase AC 240V	480V	600V	Three-Phase AC 240V	480V	600V	DC 250V	600V	NEMA 4X Enclosure Corrosion-Resistant, Stainless Steel Catalog Number
Three-Pole—480 Vac—600 Vac, 250 Vdc (Suitable for Service Entrance Use with a Neutral Kit Installed)										
	30	3	7-1/2	10	10	20	30	5	—	**DH361UWK316**
	60	10	20	25	20	50	60	10	—	**DH362UWK316**
	100	20	40	50	40	75	100	20	—	**DH363UWK316**
	200	15	50	50	60	125	150	40	—	**DH364UWK316**
	400	—	—	—	125	250	350	50	—	**DH365UWK316**
	600	—	—	—	200	400	500	—	—	**DH366UWK316**
	800	—	—	—	—	500	500	—	—	**DH367UWK316**
	1200	—	—	—	—	—	—	—	—	**DH368UWK316**

600 Vac Non-Fusible Four-Pole—316 Grade Stainless Steel NEMA 4X

System	Ampere Rating	Maximum Horsepower Ratings Two-Phase AC 240V	480V	600V	Three-Phase AC 240V	480V	600V	DC 250V	600V	NEMA 4X Enclosure Corrosion-Resistant, Stainless Steel Catalog Number
Four-Pole—480 Vac—600 Vac, 250 Vdc										
	30	10	20	25	10	20	30	5	—	**DH461UWK316**
	60	20	40	50	20	50	60	10	—	①
	100	40	50	50	40	75	100	20	—	①
	200	50	50	50	60	125	150	40	—	①
	400	50	—	—	125	250	350	—	—	①
	600	—	—	—	200	400	500	—	—	①
	800	—	—	—	—	—	—	—	—	①

Note

① Contact the Safety Switch Flex Center (**1-888-329-9272** or FlexSwitches@eaton.com) for availability of this product.

DH361FWK-GCL

Contents

Description	*Page*
Product Overview	**V2-T1-3**
General Duty	**V2-T1-26**
Heavy-Duty	**V2-T1-31**
Six-Pole Switches	**V2-T1-43**
Double-Throw Switches	**V2-T1-45**
EnviroLine—Stainless Steel Switch	**V2-T1-53**
EnviroLine—Upper and Lower Window Switches	**V2-T1-56**
EnviroLine—Receptacle Switches	**V2-T1-59**
EnviroLine—Non-Metallic KRYDON Switch	**V2-T1-61**
Shunt Trip Safety SwitchShunt Trip Safety Switch	**V2-T1-63**
NEMA 7/9—Hazardous Location Disconnect Switch	**V2-T1-66**
Quick Connect Switches	**V2-T1-68**
Solar Disconnect Switch	**V2-T1-70**
316-Grade Stainless Steel Safety Switches	**V2-T1-72**
Mill-Duty Rated, Heavy-Duty, Fusible, Non-Fusible, Single-Throw Product Selection	**V2-T1-77**
Heavy-Duty Fusible Safety Switches Accepting Cube Fuses	**V2-T1-78**
Elevator Control Switch	**V2-T1-81**
Auxiliary Power Heavy-Duty Safety Switch	**V2-T1-83**
Left-Handed Safety Switch	**V2-T1-86**
200% Neutral Safety Switches	**V2-T1-87**
Pringle Bolted Pressure Switch	
Type DS, Fusible and Non-Fusible	**V2-T1-91**
Type Visi-Flex DE-ION	**V2-T1-94**
Flange Mounted—Variable Depth	**V2-T1-98**
Flange Mounted—Fixed Depth	**V2-T1-102**

Mill-Duty Rated, Heavy-Duty, Fusible, Non-Fusible, Single-Throw

Product Description

240V, 600 Vac Heavy-Duty, Fusible, Non-Fusible, Single-Throw

- 30–600A
- Horsepower rated
- Suitable for service entrance use
- Factory-installed copper ground lug
- Copper terminal lugs
- Fuse pullers through 200A
- For factory modifications, refer to **Pages V2-T1-16** through **V2-T1-19**

Standards and Certifications

- UL listed File No. E5239

Listed

Product Selection

DH361FWK-GCL

Fusible

System	Ampere Rating	Fuse Class Provision	Maximum Horsepower Ratings with Time Delay Fuses — AC Standard Fuse Single-Phase	AC Standard Fuse Three-Phase	AC Time Delay Single-Phase	AC Time Delay Three-Phase	DC 250V	DC 600V	NEMA 12 Enclosure Industrial, Dust-Tight Catalog Number	NEMA 4X Enclosure Corrosion-Resistant, Stainless Steel Catalog Number
Three-Pole—240 Vac, 250 Vdc (Suitable for Service Entrance Use with a Neutral Kit Installed) ①										
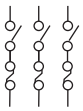	30	H	1-1/2	3	—	7-1/2	—	—	**DH321FDK-GCL ②**	**DH321FWK-GCL**
	60	H	3	7-1/2	—	15	—	—	**DH322FDK-GCL ②**	**DH322FWK-GCL**
	100	H	7-1/2	15	—	30	20	—	**DH323FDK-GCL ②**	**③**
	200	H	15	25	—	60	40	—	**DH324FDK-GCL ②**	**DH324FWK-GCL**
	400	H	—	50	—	125	50	—	**DH325FDK-GCL ②**	**DH325FWK-GCL**
	600	H	—	75	—	200	—	—	**DH326FDK-GCL ②**	**DH326FWK-GCL**
Two-Pole—480 Vac—600 Vac or DC ⑤ (Suitable for Service Entrance Use with a Neutral Kit Installed) ①										
	30	H	7-1/2	10	—	—	—	15	**DH261FDK-GCL ②**	**DH261FWK-GCL**
	60	H	20	25	—	—	—	25	**DH262FDK-GCL ②**	**③ or ④**
	100	H	30	40	—	—	—	25	**DH263FDK-GCL ②**	**③ or ④**
	200	H	50	50	—	—	—	50	**DH264FDK-GCL ②**	**DH264FWK-GCL**
Three-Pole—480 Vac—600 Vac, 250 Vdc (Suitable for Service Entrance Use with a Neutral Kit Installed) ①										
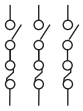	30	H	7-1/2	10	15	20	—	—	**DH361FDK-GCL ②**	**DH361FWK-GCL**
	60	H	20	25	30	50	—	—	**DH362FDK-GCL ②**	**DH362FWK-GCL**
	100	H	30	40	60	75	—	—	**DH363FDK-GCL ②**	**DH363FWK-GCL**
	200	H	50	50	125	150	—	—	**DH364FDK-GCL ②**	**DH364FWK-GCL**
	400	H	—	—	250	350	—	—	**DH365FDK-GCL ②**	**DH365FWK-GCL**
	600	H	—	—	400	500	—	—	**DH366FDK-GCL ②**	**DH366FWK-GCL**

Non-Fusible 277/480–600V

System	Ampere Rating	Fuse Class Provision	Maximum Horsepower Ratings — AC Standard Fuse Single-Phase	AC Standard Fuse Three-Phase	AC Time Delay Single-Phase	AC Time Delay Three-Phase	DC 250V	DC 600V	NEMA 12 Enclosure Industrial, Dust-Tight Catalog Number	NEMA 4X Enclosure Corrosion-Resistant, Stainless Steel Catalog Number
Three-Pole—480 Vac—600 Vac, 250 Vdc ⑥ (Suitable for Service Entrance use with a Neutral Kit Installed) ①										
	30	—	7-1/2	10	20	30	5	—	**DH361UDK-GCL ②**	**DH361UWK-GCL**
	60	—	20	25	50	60	10	—	**DH362UDK-GCL ②**	**DH362UWK-GCL**
	100	—	40	50	75	100	20	—	**DH363UDK-GCL ②**	**DH363UWK-GCL**
	200	—	50	50	125	150	40	—	**DH364UDK-GCL ②**	**DH364UWK-GCL**
	400	—	—	—	250	350	50	—	**DH365UDK-GCL ②**	**DH365UWK-GCL**
	600	—	—	—	400	500	—	—	**DH366UDK-GCL ②**	**DH366UWK-GCL**

Notes

① Contact the Safety Switch Flex Center (**1-888-329-9272** or FlexSwitches@eaton.com) for copper neutrals.
② NEMA 12 enclosures (30–600A) can be field modified to meet NEMA 3R rainproof requirements when a factory provided drain hole is opened.
③ Contact the Safety Switch Flex Center (**1-888-329-9272** or FlexSwitches@eaton.com) for availability of this product.
④ Use three-pole catalog numbers below for 600 Vac, 250 Vdc maximum applications. For 600 Vdc, see note ③.
⑤ DC rating for 400–600A switches is 250V.
⑥ For two-pole applications, use outside poles of three-pole switch.

DH361FRKCB

Contents

Description	*Page*
Product Overview	**V2-T1-3**
General Duty	**V2-T1-26**
Heavy-Duty	**V2-T1-31**
Six-Pole Switches	**V2-T1-43**
Double-Throw Switches	**V2-T1-45**
EnviroLine—Stainless Steel Switch	**V2-T1-53**
EnviroLine—Upper and Lower Window Switches	**V2-T1-56**
EnviroLine—Receptacle Switches	**V2-T1-59**
EnviroLine—Non-Metallic KRYDON Switch	**V2-T1-61**
Shunt Trip Safety SwitchShunt Trip Safety Switch	**V2-T1-63**
NEMA 7/9—Hazardous Location Disconnect Switch	**V2-T1-66**
Quick Connect Switches	**V2-T1-68**
Solar Disconnect Switch	**V2-T1-70**
316-Grade Stainless Steel Safety Switches	**V2-T1-72**
Mill-Duty Rated, Heavy-Duty, Fusible, Non-Fusible, Single-Throw	**V2-T1-76**
Heavy-Duty Fusible Safety Switches Accepting Cube Fuses Product Selection	**V2-T1-79**
Elevator Control Switch	**V2-T1-81**
Auxiliary Power Heavy-Duty Safety Switch	**V2-T1-83**
Left-Handed Safety Switch	**V2-T1-86**
200% Neutral Safety Switches	**V2-T1-87**
Pringle Bolted Pressure Switch	**V2-T1-88**
Type DS, Fusible and Non-Fusible	**V2-T1-91**
Type Visi-Flex DE-ION	**V2-T1-94**
Flange Mounted—Variable Depth	**V2-T1-98**
Flange Mounted—Fixed Depth	**V2-T1-102**

Heavy-Duty Fusible Safety Switches Accepting Cube Fuses

Product Description

600 Vac Heavy-Duty, Fusible, Single-Throw

Cube fuses installed in a safety switch provide finger-safe protection, Class J time delay electrical performance with a smaller footprint than Class J or CC fusing, and blown fuse indication.

- 30–100A
- Horsepower rated
- For factory modifications, refer to **Pages V2-T1-16** through **V2-T1-19**

Standards and Certifications

- UL listed File No. E5239

Listed

Product Selection

DH361FRKCB

Fusible 277/480–600V

System	Ampere Rating	Fuse Class Provision	Maximum Horsepower Ratings: Single-Phase AC 480V	Single-Phase AC 600V	Three-Phase AC 480V	Three-Phase AC 600V	DC 250V	NEMA 1 Enclosure Indoor Catalog Number	NEMA 3R Enclosure Rainproof Catalog Number	NEMA 12 Enclosure Industrial, Dust-Tight Catalog Number	NEMA 4X Enclosure Corrosion-Resistant, Stainless Steel Catalog Number
Three-Pole—480 Vac—600 Vac, 250 Vdc (Suitable for Service Entrance Use with a Neutral Kit Installed)											
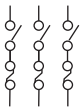	30	Cube	7-1/2	10	15	20	—	**DH361FGKCB**	**DH361FRKCB**	**DH361FDKCB** ①	**DH361FWKCB**
	60	Cube	20	25	30	50	—	**DH362FGKCB**	**DH362FRKCB**	**DH362FDKCB** ①	**DH362FWKCB**
	100	Cube	30	40	60	75	—	**DH363FGKCB**	**DH363FRKCB**	**DH363FDKCB** ①	**DH363FWKCB**

Fusible 277/480–600V

System	Ampere Rating	Fuse Class Provision	Maximum Horsepower Ratings: Single-Phase AC 480V	Single-Phase AC 600V	Three-Phase AC 480V	Three-Phase AC 600V	DC 250V	NEMA 1 Enclosure Indoor Catalog Number	NEMA 3R Enclosure Rainproof Catalog Number	Blades, 3-Fuses S/N 480 Vac—600 Vac: NEMA 12 Enclosure Industrial, Dust-Tight Catalog Number	NEMA 4X Enclosure Corrosion-Resistant, Stainless Steel Catalog Number
Four-Wire (Three Blades, Three Fuses, S/N) 480 Vac—600 Vac, 250 Vdc											
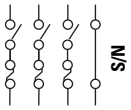	30	Cube	7-1/2	10	15	20	—	**DH361NGKCB**	**DH361NRKCB**	**DH361NDKCB** ①	**DH361NWKCB**
	60	Cube	20	25	30	50	—	**DH362NGKCB**	**DH362NRKCB**	**DH362NDKCB** ①	**DH362NWKCB**
	100	Cube	30	40	60	75	—	**DH363NGKCB**	**DH363NRKCB**	**DH363NDKCB** ①	**DH363NWKCB**

Fusible 277/480–600V

System	Ampere Rating	Fuse Class Provision	Maximum Horsepower Ratings: Two-Phase AC 480V	Two-Phase AC 600V	Three-Phase AC 480V	Three-Phase AC 600V	DC 250V	NEMA 1 Enclosure Indoor Catalog Number	NEMA 3R Enclosure Rainproof Catalog Number	Vac—600 Vac, 250 Vac: NEMA 12 Enclosure Industrial, Dust-Tight Catalog Number	NEMA 4X Enclosure Corrosion-Resistant, Stainless Steel Catalog Number
Four-Pole—480 Vac—600 Vac, 250 Vdc											
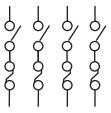	30	Cube	20	25	15	20	—	**DH461FGKCB**	①	①②	②
	60	Cube	40	50	30	50	—	**DH462FGKCB**	①	①②	②
	100	Cube	50	50	60	75	—	**DH463FGKCB**	①	**DH463FDKCB** ①	②

Notes

① NEMA 12 enclosures (30–100A) can be field modified to meet NEMA 3R rainproof requirements when a factory provided drain hole is opened.

② Contact the Safety Switch Flex Center (**1-888-329-9272** or FlexSwitches@eaton.com) for availability of this product.

1

Fusible with Window 277/480–600V

System	Ampere Rating	Fuse Class Provision	Maximum Horsepower Ratings Single-Phase AC 480V	Single-Phase AC 600V	Three-Phase AC 480V	Three-Phase AC 600V	DC 250V/600V	NEMA 12 Enclosure Industrial, Dust-Tight Catalog Number	NEMA 4X Enclosure Corrosion-Resistant, Stainless Steel Catalog Number
Four-Wire (Three Blades, Three Fuses, S/N), 600 Vac—250 Vdc ①									
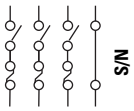	30	Cube	7-1/2	10	15	20	—	**DH361NDKWCB** ①	**DH361NWKWCB**
	60	Cube	20	25	30	50	—	**DH362NDKWCB** ①	**DH362NWKWCB**
	100	Cube	30	40	60	75	—	**DH363NDKWCB** ①	**DH363NWKWCB**

Notes

① NEMA 12 enclosures (30–100A) can be field modified to meet NEMA 3R rainproof requirements when a factory provided drain hole is opened.

Fuses are supplied as separate items.

Elevator Control Switch

Contents

Description	*Page*
Product Overview	V2-T1-3
General Duty	V2-T1-26
Heavy-Duty	V2-T1-31
Six-Pole Switches	V2-T1-43
Double-Throw Switches	V2-T1-45
EnviroLine—Stainless Steel Switch	V2-T1-53
EnviroLine—Upper and Lower Window Switches	V2-T1-56
EnviroLine—Receptacle Switches	V2-T1-59
EnviroLine—Non-Metallic KRYDON Switch	V2-T1-61
Shunt Trip Safety SwitchShunt Trip Safety Switch	V2-T1-63
NEMA 7/9—Hazardous Location Disconnect Switch	V2-T1-66
Quick Connect Switches	V2-T1-68
Solar Disconnect Switch	V2-T1-70
316-Grade Stainless Steel Safety Switches	V2-T1-72
Mill-Duty Rated, Heavy-Duty, Fusible, Non-Fusible, Single-Throw	V2-T1-76
Heavy-Duty Fusible Safety Switches Accepting Cube Fuses	V2-T1-78
Elevator Control Switch	
Catalog Number Selection	V2-T1-82
Technical Data and Specifications	V2-T1-82
Dimensions	V2-T1-82
Auxiliary Power Heavy-Duty Safety Switch	V2-T1-83
Left-Handed Safety Switch	V2-T1-86
200% Neutral Safety Switches	V2-T1-87
Pringle Bolted Pressure Switch	V2-T1-88
Type DS, Fusible and Non-Fusible	V2-T1-91
Type Visi-Flex DE-ION	V2-T1-94
Flange Mounted—Variable Depth	V2-T1-98
Flange Mounted—Fixed Depth	V2-T1-102

Elevator Control Switch

Features, Benefits and Functions

Standard Features

- 30–400A, 600 Vac three-phase fused power switch
- 200,000A rms short-circuit current rating
- Shunt trip 120V
- Control power terminal block
- Ground lug per NEC
- Class J Fuse mounting only (Class J Fuses not included)
- Key to test switch 120V
- Mechanically interlocked auxiliary contact for hydraulic elevators with automatic recall (5A, 120 Vac rated) 1NO, 1NC

Optional Features

- Control power transformer with fuses and blocks
- Fire safety interface relay
- Pilot light—ON
- Isolated neutral lug (oversized 200% rated neutral option available where required by excessive nonlinear loads)
- Fire alarm voltage monitoring relay (to monitor shunt trip voltage)
- NEMA 3R, 4 and 12 enclosures available through 200A
- Phase failure and undervoltage relay available, consult factory
- For added protection, use Eaton fuse covers to improve maintenance personnel protection, through 200A (OSHA 1910.333, Paragraph C)

Standards and Certifications

- UL 98 Enclosed and Deadfront Switch Guide 96NK3917, File No. E182262
- NEMA 1, UL 50, listed enclosure
- cUL® per Canadian Standards C22.2, No. 0-M91-CAN/CSA® C22.2, No. 4-M89 Enclosed Switch

Listed

1

Catalog Number Selection

Elevator Control Switch

ES 1 T2 R2 G F1 3 N B

Prefix
ES = Elevator control switch

Ampere Rating
1 = 30A
2 = 60A
3 = 100A
4 = 200A
5 = 400A

Control Transformer ①
T2 = 208V
T3 = 240V
T1 = 480V
T4 = 600V

Fire Safety Interface Relay (3PDT, 10A, 120V)
R2 = 24 Vdc coil
R1 = 120 Vac coil

Pilot Light ON
G = Green
R = Red
W = White

Fire Alarm Voltage Monitoring Relay (To Monitor Shunt Trip Voltage)
F1 = Single-pole
F3 = Three-pole

Enclosure Options (NEMA 1 Standard With No Suffix Designation Required)
3 = NEMA 3R
D = NEMA 12
P = NEMA 4 painted steel

Neutral Lug
N = Isolated full capacity

Auxiliary Contacts 1NO/1NC
B = Main switch

Catalog Number Example: ES3T1R1GF3

- 100A S.T. switch 480V-3P—ES3
- 480–120V CPT—T1
- 120 Vac coil fire safety interface relay—R1
- Pilot light—ON (Green)—G
- Fire alarm voltage monitoring relay (three-pole)—F3

Technical Data and Specifications

Elevator Control Switch Maximum hp Rating—Sizing Based on Motor Type

Voltage Rating (Vac Three-Phase)	Ampere Rating 30A, ES1			60A, ES2			100A, ES3			200A, ES4			400A, ES5		
	A	B	C	A	B	C	A	B	C	A	B	C	A	B	C
208	5	5	3	10	10	10	20	15	15	40	40	30	—	—	—
240	5	5	5	10	10	10	20	20	15	50	40	30	—	—	—
280	10	10	10	30	25	20	50	40	30	100	75	75	—	—	—
600	15	15	10	30	30	25	60	50	40	125	100	100	—	—	—

Dimensions

Approximate Dimensions in Inches (mm)

Elevator Control Switch Dimensions and Lug Data

Ampere Rating	NEMA 1 ① Height	Width	Depth	NEMA 3R, 12 ② Height	Width	Depth	Lug Size ③	Catalog Number
30	20.00 (508.0)	16.00 (406.4)	8.63 (219.2)	20.00 (508.0)	20.00 (508.0)	8.00 (203.2)	#14–#8 Al or Cu	**ES1**
60	20.00 (508.0)	16.00 (406.4)	8.63 (219.2)	20.00 (508.0)	20.00 (508.0)	8.00 (203.2)	#14–#2 Al or Cu	**ES2**
100	20.00 (508.0)	16.00 (406.4)	8.63 (219.2)	20.00 (508.0)	20.00 (508.0)	8.00 (203.2)	#8–1/0 Al or Cu	**ES3**
200	30.00 (762.0)	20.00 (508.0)	8.63 (219.2)	30.00 (762.0)	24.00 (609.6)	8.00 (203.2)	#6–250 kcmil Al or Cu	**ES4**
400	52.00 (320.8)	25.00 (635.0)	8.00 (203.2)	52.00 (1320.8)	25.00 (635.0)	8.00 (203.2)	(2) I/O–(1) 750	**ES5**

Notes

① Standard oversize enclosure to mount control power transformer fire safety interface relay and control terminal blocks.
② Contact factory for dimensions for NEMA 4 enclosure.
③ Optional neutral lug size same as line and load.

DH323FRKA1240

Contents

Description	*Page*
Product Overview	**V2-T1-3**
General Duty	**V2-T1-26**
Heavy-Duty	**V2-T1-31**
Six-Pole Switches	**V2-T1-43**
Double-Throw Switches	**V2-T1-45**
EnviroLine—Stainless Steel Switch	**V2-T1-53**
EnviroLine—Upper and Lower Window Switches	**V2-T1-56**
EnviroLine—Receptacle Switches	**V2-T1-59**
EnviroLine—Non-Metallic KRYDON Switch	**V2-T1-61**
Shunt Trip Safety SwitchShunt Trip Safety Switch	**V2-T1-63**
NEMA 7/9—Hazardous Location Disconnect Switch	**V2-T1-66**
Quick Connect Switches	**V2-T1-68**
Solar Disconnect Switch	**V2-T1-70**
316-Grade Stainless Steel Safety Switches	**V2-T1-72**
Mill-Duty Rated, Heavy-Duty, Fusible, Non-Fusible, Single-Throw	**V2-T1-76**
Heavy-Duty Fusible Safety Switches Accepting Cube Fuses	**V2-T1-78**
Elevator Control Switch	**V2-T1-81**
Auxiliary Power Heavy-Duty Safety Switch Product Selection	**V2-T1-84**
Left-Handed Safety Switch	**V2-T1-86**
200% Neutral Safety Switches	**V2-T1-87**
Pringle Bolted Pressure Switch	
Type DS, Fusible and Non-Fusible	**V2-T1-91**
Type Visi-Flex DE-ION	**V2-T1-94**
Flange Mounted—Variable Depth	**V2-T1-98**
Flange Mounted—Fixed Depth	**V2-T1-102**

Auxiliary Power Heavy-Duty Safety Switch

Product Description

NEC Article 210.63 requires that a 125V, single-phase, 15 or 20A rated receptacle outlet be installed at an accessible location for the servicing of heating, air-conditioning and refrigeration equipment. The receptacle must be located on the same level and within 25 ft (7.5m) of the heating, air-conditioning and refrigeration equipment. Eaton's heavy-duty safety switch is an ideal solution for these applications, including elimination of the need for running a separate 120V circuit to the rooftop.

Features

- 30–200A
- Horsepower rated
- NEMA 3R outdoor enclosure standard
- 15A ground fault receptacle standard
- For factory modifications, refer to **Pages V2-T1-16** through **V2-T1-19**

Standards and Certifications

- UL listed File No. E5239

Listed

1 Product Selection

Non-Fusible 208 Vac—240 Vac—480 Vac—600 Vac—Three-Pole

Ampere Rating	Maximum Horsepower Ratings Single-Phase AC 240V	480V	600V	Three-Phase AC 240V	480V	600V	Catalog Number
208 Vac							
30	—	—	—	—	—	—	**DH321URKA1208**
60	—	—	—	—	—	—	**DH322URKA1208**
100	—	—	—	—	—	—	**DH323URKA1208**
200	—	—	—	—	—	—	**DH324URKA1208**
240 Vac							
30	3	—	—	10	—	—	**DH321URKA1240**
60	10	—	—	20	—	—	**DH322URKA1240**
100	20	—	—	40	—	—	**DH323URKA1240**
200	15	—	—	60	—	—	**DH324URKA1240**
480 Vac							
30	3	7-1/2	10	10	20	30	**DH361URKA1480**
60	10	20	25	20	50	60	**DH362URKA1480**
100	20	40	50	40	75	100	**DH363URKA1480**
200	15	50	50	60	125	150	**DH364URKA1480**
600 Vac							
30	3	7-1/2	10	10	20	30	**DH361URKA1600**
60	10	20	25	20	50	60	**DH362URKA1600**
100	20	40	50	40	75	100	**DH363URKA1600**
200	15	50	50	60	125	150	**DH364URKA1600**

DH323FRKA1240

Fusible 208 Vac—240 Vac—Three-Pole

Ampere Rating	Fuse Type Provision	Maximum Horsepower Ratings AC Standard Fuse Single-Phase	Three-Phase	Time Delay Single-Phase	Three-Phase	Catalog Number
208 Vac						
30	H	—	—	—	—	**DH321FRKA1208**
60	H	—	—	—	—	**DH322FRKA1208**
100	H	—	—	—	—	**DH323FRKA1208**
200	H	—	—	—	—	**DH324FRKA1208**
240 Vac						
30	H	1-1/2	3	—	7-1/2	**DH321FRKA1240**
60	H	3	7-1/2	—	15	**DH322FRKA1240**
100	H	7-1/2	15	—	30	**DH323FRKA1240**
200	H	15	25	—	60	**DH324FRKA1240**

Note

Contact the Safety Switch Flex Center (**1-888-329-9272** or FlexSwitches@eaton.com) for additional options, including 20A GFI receptacles.

Fusible 480 Vac—600 Vac—Three-Pole

Ampere Rating	Fuse Type Provision	Maximum Horsepower Ratings with Time Delay Fuses Single-Phase AC 480V	600V	Three-Phase AC 480V	600V	Catalog Number
480 Vac						
30	H	7-1/2	10	15	20	**DH361FRKA1480**
60	H	20	25	30	50	**DH362FRKA1480**
100	H	30	40	60	75	**DH363FRKA1480**
200	H	50	50	125	150	**DH364FRKA1480**
600 Vac						
30	H	7-1/2	10	15	20	**DH361FRKA1600**
60	H	20	25	30	50	**DH362FRKA1600**
100	H	30	40	60	75	**DH363FRKA1600**
200	H	50	50	125	150	**DH364FRKA1600**

Fusible 208 Vac—240 Vac—Three-Pole

Ampere Rating	Fuse Type Provision	Maximum Horsepower Ratings AC Standard Fuse Single-Phase	Three-Phase	Time Delay Single-Phase	Three-Phase	Catalog Number
208 Vac						
30	H	—	—	—	—	**DH321NRKA1208**
60	H	—	—	—	—	**DH322NRKA1208**
100	H	—	—	—	—	**DH323NRKA1208**
200	H	—	—	—	—	**DH324NRKA1208**
240 Vac						
30	H	1-1/2	3	—	7-1/2	**DH321NRKA1240**
60	H	3	7-1/2	—	15	**DH322NRKA1240**
100	H	7-1/2	15	—	30	**DH323NRKA1240**
200	H	15	25	—	60	**DH324NRKA1240**

Fusible 480 Vac—600 Vac—Three-Pole

Ampere Rating	Fuse Type Provision	Maximum Horsepower Ratings with Time Delay Fuses Single-Phase AC 480V	600V	Three-Phase AC 480V	600V	Catalog Number
480 Vac						
30	H	7-1/2	10	15	20	**DH361NRKA1480**
60	H	20	25	30	50	**DH362NRKA1480**
100	H	30	40	60	75	**DH363NRKA1480**
200	H	50	50	125	150	**DH364NRKA1480**
600 Vac						
30	H	7-1/2	10	15	20	**DH361NRKA1600**
60	H	20	25	30	50	**DH362NRKA1600**
100	H	30	40	60	75	**DH363NRKA1600**
200	H	50	50	125	150	**DH364NRKA1600**

Note

Contact the Safety Switch Flex Center (**1-888-329-9272** or FlexSwitches@eaton.com) for additional options, including 20A GFI receptacles.

Left-Handed Safety Switch

Contents

Description	Page
Product Overview	V2-T1-3
General Duty	V2-T1-26
Heavy-Duty	V2-T1-31
Six-Pole Switches	V2-T1-43
Double-Throw Switches	V2-T1-45
EnviroLine—Stainless Steel Switch	V2-T1-53
EnviroLine—Upper and Lower Window Switches	V2-T1-56
EnviroLine—Receptacle Switches	V2-T1-59
EnviroLine—Non-Metallic KRYDON Switch	V2-T1-61
Shunt Trip Safety SwitchShunt Trip Safety Switch	V2-T1-63
NEMA 7/9—Hazardous Location Disconnect Switch	V2-T1-66
Quick Connect Switches	V2-T1-68
Solar Disconnect Switch	V2-T1-70
316-Grade Stainless Steel Safety Switches	V2-T1-72
Mill-Duty Rated, Heavy-Duty, Fusible, Non-Fusible, Single-Throw	V2-T1-76
Heavy-Duty Fusible Safety Switches Accepting Cube Fuses	V2-T1-78
Elevator Control Switch	V2-T1-81
Auxiliary Power Heavy-Duty Safety Switch	V2-T1-83
Left-Handed Safety Switch 200% Neutral Safety Switches	V2-T1-87
Pringle Bolted Pressure Switch	V2-T1-88
Type DS, Fusible and Non-Fusible	V2-T1-91
Type Visi-Flex DE-ION	V2-T1-94
Flange Mounted—Variable Depth	V2-T1-98
Flange Mounted—Fixed Depth	V2-T1-102

Left-Handed Safety Switch

Product Selection

Ordering Information

Step One: Left-handed safety switches are available from 30–200A for applications requiring an operating handle on the left side of the enclosure. Select the standard safety switch from the catalog and **add Suffix LH** to the catalog number.

Step Two: Contact the Safety Switch Flex Center for complete pricing and delivery information. The Flex Center will provide a list price. An authorized negotiation (TSP) number will be provided to track your order.

Safety Switch Flex Center
Phone: **1-888-329-9272** or
FlexSwitches@eaton.com
Fax: **1-423-478-0270**

Step Three: Enter the order on VISTALINE by description (with catalog number as applicable) and reference the authorized negotiation (TSP) number.

Vista suffix will be "ETS."
Product code will be "BE90."

For order entry assistance, contact CSC at:
Phone: **1-800-356-1243**
Fax: **1-800-752-8602**

Note: Left-handed safety switches are supplied with a C361H1 handle.

Contents

Description	*Page*
Product Overview	**V2-T1-3**
General Duty	**V2-T1-26**
Heavy-Duty	**V2-T1-31**
Six-Pole Switches	**V2-T1-43**
Double-Throw Switches	**V2-T1-45**
EnviroLine—Stainless Steel Switch	**V2-T1-53**
EnviroLine—Upper and Lower Window Switches	**V2-T1-56**
EnviroLine—Receptacle Switches	**V2-T1-59**
EnviroLine—Non-Metallic KRYDON Switch	**V2-T1-61**
Shunt Trip Safety SwitchShunt Trip Safety Switch	**V2-T1-63**
NEMA 7/9—Hazardous Location Disconnect Switch	**V2-T1-66**
Quick Connect Switches	**V2-T1-68**
Solar Disconnect Switch	**V2-T1-70**
316-Grade Stainless Steel Safety Switches	**V2-T1-72**
Mill-Duty Rated, Heavy-Duty, Fusible, Non-Fusible, Single-Throw	**V2-T1-76**
Heavy-Duty Fusible Safety Switches Accepting Cube Fuses	**V2-T1-78**
Elevator Control Switch	**V2-T1-81**
Auxiliary Power Heavy-Duty Safety Switch	**V2-T1-83**
Left-Handed Safety Switch	**V2-T1-86**
200% Neutral Safety Switches	
Pringle Bolted Pressure Switch	**V2-T1-88**
Type DS, Fusible and Non-Fusible	**V2-T1-91**
Type Visi-Flex DE-ION	**V2-T1-94**
Flange Mounted—Variable Depth	**V2-T1-98**
Flange Mounted—Fixed Depth	**V2-T1-102**

200% Neutral Safety Switches

Product Selection

Ordering Information

Step One: Safety switches with 200% neutrals are available from 30–600A. Select the standard safety switch from the catalog and **add Suffix 200** to the catalog number.

Step Two: Contact the Safety Switch Flex Center for complete pricing and delivery information. The Flex Center will provide a list price and specifications for the 200% neutral. An authorized negotiation (TSP) number will be provided to track your order.

Safety Switch Flex Center
Phone: **1-888-329-9272** or
FlexSwitches@eaton.com
Fax: **1-423-478-0270**

Step Three: Enter the order on VISTALINE by description (with catalog number as applicable) and reference the authorized negotiation (TSP) number.

Vista suffix will be "ETS."
Product code will be "BE90."

For order entry assistance, contact CSC at:
Phone: **1-800-356-1243**
Fax: **1-800-752-8602**

Pringle Bolted Pressure Switches

CBC Type Switch

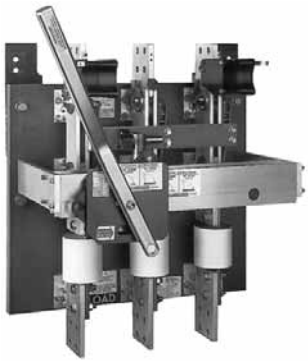

QA Type Switch

Contents

Description	*Page*
Product Overview	**V2-T1-3**
General Duty	**V2-T1-26**
Heavy-Duty	**V2-T1-31**
Six-Pole Switches	**V2-T1-43**
Double-Throw Switches	**V2-T1-45**
EnviroLine—Stainless Steel Switch	**V2-T1-53**
EnviroLine—Upper and Lower Window Switches	**V2-T1-56**
EnviroLine—Receptacle Switches	**V2-T1-59**
EnviroLine—Non-Metallic KRYDON Switch	**V2-T1-61**
Shunt Trip Safety SwitchShunt Trip Safety Switch	**V2-T1-63**
NEMA 7/9—Hazardous Location Disconnect Switch	**V2-T1-66**
Quick Connect Switches	**V2-T1-68**
Solar Disconnect Switch	**V2-T1-70**
316-Grade Stainless Steel Safety Switches	**V2-T1-72**
Mill-Duty Rated, Heavy-Duty, Fusible, Non-Fusible, Single-Throw	**V2-T1-76**
Heavy-Duty Fusible Safety Switches Accepting Cube Fuses	**V2-T1-78**
Elevator Control Switch	**V2-T1-81**
Auxiliary Power Heavy-Duty Safety Switch	**V2-T1-83**
Left-Handed Safety Switch	**V2-T1-86**
200% Neutral Safety Switches	**V2-T1-87**
Pringle Bolted Pressure Switch	
Catalog Number Selection	**V2-T1-89**
Product Selection	**V2-T1-90**
Reference Information	**V2-T1-90**
Technical Data and Specifications	**V2-T1-90**
Type DS, Fusible and Non-Fusible	**V2-T1-91**
Type Visi-Flex DE-ION	**V2-T1-94**
Flange Mounted—Variable Depth	**V2-T1-98**
Flange Mounted—Fixed Depth	**V2-T1-102**

Pringle Bolted Pressure Switch

Product Description

Eaton Pringle® switches have helped pioneer development of high-quality electrical products for commercial and industrial applications since 1891. Eaton's commitment to engineering excellence and reputation for quality have made us a recolonized leader in the electrical industry, and today you'll find our electrical products in use throughout the U.S., Canada and most of the world's major markets. Eaton Pringle bolted contact switches were the first in the industry and are a worldwide standard in high-current switching applications. They are custom-built and used in many heavy-duty applications, and are suitable for use in UL 891 switchboards.

Bolted Pressure Contacts

All Pringle switches feature bolted pressure contacts. The result: blade contact surfaces are bolted closed at a pressure of 600 PSI—at both the hinge and jaw ends. The benefit: current conducting efficiency is the equivalent of a bolted bus bar connection.

Features

- 480V UL
- 600V CSA
- 800–4000 Amperes
- 5000–6000 Amperes (not UL listed)
- 200 kAIC and 100% rated with Class "L" fuses
- Top or bottom feed
- Two, three- or four-pole
- Optional blown fuse detection and protection
- Quick-positive switching action
- Manual or electrically operated mechanism
- 6X Make/12X Break contact rating
- Pringle Flex Center can offer custom assemblies; for quotes, call 1-888-329-9272 option 2
- Many options available, see following page

Spring Mechanism

All quick action switches use a unique spring mechanism for improved reliability over traditional coil springs. The unique spring design is created by a series of concave-convex washers. The paired-washer spring design provides a higher force/distance ratio, making it easier to operate the mechanism.

Should any pair of washers become inoperable for any reason, the entire spring assembly will still be operable by means of the remaining pairs. This is unlike the situation if a coil spring were to fracture or fatigue.

Sample Spring Configuration

Standards and Certifications

- 480V UL
- 600V CSA

Catalog Number Selection

Pringle Bolted Pressure Switch

CB 08 3 3 B 120 480 K G R AO CT 5 _ NF

Switch
- **CB** = CBC
- **QA** = QA
- **FP** = FP
- **EO** = EO ①

Amperes
- **08** = 800A
- **12** = 1200A
- **16** = 1600A
- **20** = 2000A
- **25** = 2500A
- **30** = 3000A
- **40** = 4000A
- **50** = 5000A ②
- **60** = 6000A ②

Poles
- **2** = Two-pole
- **3** = Three-pole
- **4** = Four-pole

Wire
- **2** = Two-wire
- **3** = Three-wire
- **4** = Four-wire

Feed
- **B** = Bottom
- **T** = Top

Voltage Control ③
- **120** = 120V ④

System Voltage ⑤
- **208** = 208V ⑥
- **480** = 480V
- **600** = 600V

Interlock
- **K** = Key interlock provisions

Ground Fault ③
- **G** = Ground fault with control power transformer
- **GNX** = Ground fault without control power transformer

Phase Failure Relay ③
- **R** = Single-phase voltage relay with capacitor trip device (SPVR)

Blown Fuse Detector (BFD)
- **A** = BFD with three normally ON lights (does NOT trip)
- **AO** = BFD with three normally OFF lights (does NOT trip)
- **AX** = BFD with NO lights (trips switch)
- **A9** = BFD with three normally ON lights (trips switch)
- **AR** = BFD with three normally OFF lights (trips switch)

Control Power Transformer ③
- **CT** = With control power transformer ⑦

Auxiliary Contact
- **6** = 1NO/1NC
- **7** = 2NO/2NC

Options
- **6** = With handle suitable to meet 6'6" requirements

Additional Option
- **NF** = Non-fused ⑧

Pringle Mill Switch ②

(NEMA 1/3R/12 Enclosed)

PMS 08 3 3 NF T B W

Switch
- **PMS** = Pringle Mill Switch

Amperes
- **08** = 800A
- **12** = 1200A
- **16** = 1600A
- **20** = 2000A
- **25** = 2500A
- **30** = 3000A
- **40** = 4000A

Poles
- **2** = Two-pole ⑨
- **3** = Three-pole ⑩

Wire
- **2** = Two-wire ⑨
- **3** = Three-wire ⑩

Fusing
- **F** = Fusible
- **NF** = Non-fusible

Feed Entry
- **B** = Bottom
- **T** = Top

Feed Exit
- **B** = Bottom
- **T** = Top

Option ⑪
- **W** = With viewing window

Notes

① Not UL listed. A separate control box may be required when adding accessories.
② Does not carry UL listing.
③ Not an option with QA type switches. GF option includes control power transformer.
④ 110 Vdc and 125 Vdc also available. Please contact the Cleveland, TN plant.
⑤ For different system voltage requirements, please contact the Cleveland, TN plant.
⑥ For QA switches, use 480V system catalog number when referencing a 208V system.
⑦ Only applicable if ordering a CPT only, without ground fault.
⑧ Only available with QA switches and in a top-feed configuration.
⑨ 250 Vdc.
⑩ 480 Vac.
⑪ Additional available accessories/options—door interlock, special nameplates, custom dimensions, special paint and auxiliary contacts. Please inquire with the Cleveland, TN plant.

Product Selection

Manually Operated (QA)—UL Listed

Manually operated contact switch with quick positive switching action. Can be top or bottom fed.

Electrical Trip (CBC)—UL Listed

Contact switch with charge-before-close mechanism. Can be manually or electrically tripped. Optional blown fuse detector and phase failure relay with capacitor trip available.

Fault Protector Electrical Trip (FP)—UL Listed

The FP combines the features of a CBC switch but includes an integrated zero-sequence sensor and ground fault.

Electrically Operated Electric Trip (EO)—Not UL Listed

The EO combines the features of a CBC switch, but includes an operator with a linear motor that electrically closes the switch while charging the stored energy mechanism for stored energy trip.

Pringle Mill Switch (PMS)—Not UL Listed

Manually operated contact switch with quick-positive switching action. Comes in a NEMA 1/3R/12 enclosure with a side-operated mechanism. Can be fusible or non-fusible, two- or three-pole configurations.

Service

Eaton's Pringle switches have always been manufactured with precision-made parts, and, like any mechanical device, they do require routine maintenance in order to operate at the optimal level. Over time, contact surfaces may be exposed to dirt and other contaminants, which could result in improper mechanical and/or electrical operation of the switch.

Eaton maintains a dedicated service team that has over 100 years of combined experience in the exclusive service and repair of Pringle switches. A service call performed by a certified technician ensures that your equipment is cleaned, lubed, adjusted and repaired, and a one-year extended warranty is granted. General maintenance, repair/refurbishment and troubleshooting are just some of the services provided.

In-House Service

Eaton also offers in-house inspection, service and repair at our manufacturing facility in Cleveland, TN.

Aftermarket Parts

Eaton has a full line of factory-specified aftermarket parts for Pringle switches, as well as complete, form, fit, function, drop-in replacement switches. Aftermarket part information can be found in publication TD00808001E.

'Flex' Custom Capabilities

Custom solutions are standard throughout Eaton's switching device product line and bolted pressure contact switches are no exception. When a standard product will not meet the customer's need, Eaton's engineering and marketing teams can develop and offer solutions built to the customer's expectation.

Engineered-to-Order, or 'Flex', Non-Load-Break switch solutions with bolted pressure contact technology vary as noted below.

- Motor operated: 800 to 6000A
- High current: 6000 to 35,000A+
- Medium voltage: 5 kV, 15 kV+
- DC voltages: 250 Vdc to 3000 Vdc+
- Transit applications: single-, two-or three-pole DC rated
- Manual transfer switches
- Live front switches

Reference Information

For service questions, or to schedule service: 1.888.329.9272, option 2 pringle@eaton.com

For aftermarket replacement parts: 1.877.ETN.CARE, option 2, option 1, 1.877.386.2273, option 2, option 1, TRC@eaton.com for existing in the field.

Product brochures available via Eaton.com

- Pringle Product Brochure—BR00808001E
- Pringle Mill Switch—PA00808001E
- Pringle Replacement Parts Guide—TD00808001E
- Pringle Service—DM00808002E

Technical Data and Specifications

- 800–4000A
- 5000 and 6000A available (not UL listed)
- 200 kAIC and 100% rated with Class L fuses

Contents

Description	*Page*
Product Overview	**V2-T1-3**
General Duty	**V2-T1-26**
Heavy-Duty	**V2-T1-31**
Six-Pole Switches	**V2-T1-43**
Double-Throw Switches	**V2-T1-45**
EnviroLine—Stainless Steel Switch	**V2-T1-53**
EnviroLine—Upper and Lower Window Switches	**V2-T1-56**
EnviroLine—Receptacle Switches	**V2-T1-59**
EnviroLine—Non-Metallic KRYDON Switch	**V2-T1-61**
Shunt Trip Safety SwitchShunt Trip Safety Switch	**V2-T1-63**
NEMA 7/9—Hazardous Location Disconnect Switch	**V2-T1-66**
Quick Connect Switches	**V2-T1-68**
Solar Disconnect Switch	**V2-T1-70**
316-Grade Stainless Steel Safety Switches	**V2-T1-72**
Mill-Duty Rated, Heavy-Duty, Fusible, Non-Fusible, Single-Throw	**V2-T1-76**
Heavy-Duty Fusible Safety Switches Accepting Cube Fuses	**V2-T1-78**
Elevator Control Switch	**V2-T1-81**
Auxiliary Power Heavy-Duty Safety Switch	**V2-T1-83**
Left-Handed Safety Switch	**V2-T1-86**
200% Neutral Safety Switches	**V2-T1-87**
Pringle Bolted Pressure Switch	**V2-T1-88**
Type DS, Fusible and Non-Fusible	
Product Selection	**V2-T1-92**
Options and Accessories	**V2-T1-92**
Technical Data and Specifications	**V2-T1-93**
Type Visi-Flex DE-ION	**V2-T1-94**
Flange Mounted—Variable Depth	**V2-T1-98**
Flange Mounted—Fixed Depth	**V2-T1-102**

Type DS, Fusible and Non-Fusible

Product Description

Type DS disconnect is a compact load break switch using the DE-ION arc-quenching principle and quick make/quick break over center toggle mechanism. It has visible contacts, is UL listed and is available either as a fusible or non-fusible switch.

Note: Switches through 200A are UL listed as miscellaneous switches; 400 and 600A switches are recognized under the component program of Underwriters Laboratories.

Application Description

Maximum switch-fuse application based on short-circuit current withstand (symmetrical amperes).

Short-Circuit Ratings

Switch Rating Amperes	Maximum Application at 240, 480 or 600 Vac	
	Class R Fuses	Current Limiting Fuse Class J
30	200,000	200,000
60	200,000	200,000
100	200,000	200,000
400	100,000 ①	200,000
600	100,000 ①	200,000

Standards and Certifications

- UL 98
- CSA (see table on **Page V2-T1-92**)

Reference Information

- Technical data: 29-420
- Dimensions and drilling plans: DS 29-470
- 30, 60, 100A instruction leaflet: I.L. 14857C
- 30, 60, 100A auxiliary switch instruction leaflet: I.L. 14471C
- 200A instruction leaflet: I.L. 15014A
- 200A auxiliary switch instruction leaflet: I.L. 14486A
- Handle mechanisms: TD 29-520

Note

① 480V maximum.

1

Product Selection

DS Type Switch

Switch Ordering Information

Switch Rating	Fuse Clip Rating Ampere	Type Volts ①	Catalog Number ②③
30	No fuse ④	—	**DS16U**
30	30	NEC 250	**DS121R**
30	30	NEC 600	**DS161R**
30	60	NEC 250	**DS122**
30	60	NEC 600	**DS162**
60	No fuse ④	—	**DS26U**
60	60	NEC 250	**DS222R**
60	60	NEC 600	**DS262R**
60	100	NEC 250/600	**DS263**
100	No fuse ④	—	**DS36U**
100	100	NEC 250/600	**DS363R**
100 ⑤	200	NEC 250/600	**DS364**
400	No fuse ④	—	**DS56U**
400	400	NEC 250/600	**DS565R**
600	No fuse ④	—	**DS66U**
600	600	NEC 250/600	**DS666R**

Options and Accessories

Base Mounting Hardware

Note: Order separately when required. No charge when ordered with switch.

Base Mounting Hardware

Description	Catalog Number
30, 60, 100A non-fusible	**624B375G17**
30, 60, 100A fusible	**624B375G17**
400 or 600A non-fusible	**673B125G04**
400 or 600A Fusible	**673B125G05**

Auxiliary Switch Kits

Note: Permits field mounting of an auxiliary switch for separate control circuit applications. Each switch includes three soldered, identified leads. Rated 250V maximum.

Auxiliary Switch Kits

Switch Used With	Contact Arrangement	Kit Catalog Number
30, 60, 100A	1A-1B	**178C265G05**
30, 60, 100A	2As-2Bs	**178C265G06**

Class R Fuse Clip Conversion Kits for Type DS Switches

Switch Rating Amperes	Volts	Kit Catalog Number
30	250	**RFK121**
30	600	**RFK161**
60	250	**RFK222**
60	600	**RFK262**
100	250/600	**RFK464**
400	250/600	**RFK666**
600	250/600	**RFK666**

Notes

① 600V ratings are suitable for Class J fuses.
② Switches with Catalog Number Suffix **R** are UL listed for use with Class R fuses when fuse clip conversion kits shown on this page are used.
③ Switches with Catalog Number Suffix **R** or **U** are CSA listed.
④ Rated 600V.
⑤ Supplied as unfused switch with separate fuse blocks.

Technical Data and Specifications

Maximum Horsepower

Type Switch	Maximum Horsepower Ratings 120 Vac Standard	120 Vac Time Delay	240 Vac Standard	240 Vac Time Delay	480 Vac Standard	480 Vac Time Delay	600 Vac Standard	600 Vac Time Delay	250 Vdc
DS16U	5	—	10	—	20	—	25	—	7-1/2
DS121R	1-1/2	3	3	7-1/2	—	—	—	—	5
DS122	3	—	7-1/2	—	—	—	—	—	5
DS161R	—	—	—	—	5	15	7-1/2	20	5
DS162	—	—	—	—	15	—	15	—	5
DS26U	10	—	20	—	40	—	60	—	15
DS222R	3	7-1/2	7-1/2	15	—	—	—	—	10
DS262R	—	—	—	—	15	30	15	50	10
DS263	—	—	15	—	25	—	30	—	10
DS36U	15	—	30	—	75	—	75	—	25
DS363R	—	—	15	30	25	60	30	75	20
DS364	—	—	25	—	50	—	60	—	20
DS56U	—	—	100	—	250	—	350	—	—
DS565R	—	—	50	100	100	250	125	350	—
DS66U	—	—	100	—	400	—	500	—	—
DS666R	—	—	75	100	150	400	200	500	—

Terminal Data

Switch Rating	Wire Range Copper	Aluminum
30	#14–#2	#12–#2
60	#14–#2	#12–#2
100	#14–1/0	#12–1/0
400	(1) #4–600 kcmil or (2) 1/0–3/0	(1) #4–600 kcmil or (2) 1/0–250 kcmil
600	Same as 400A except two terminals per pole	—

Note
Terminals are suitable for either copper or aluminum cable.

Type Visi-Flex DE-ION

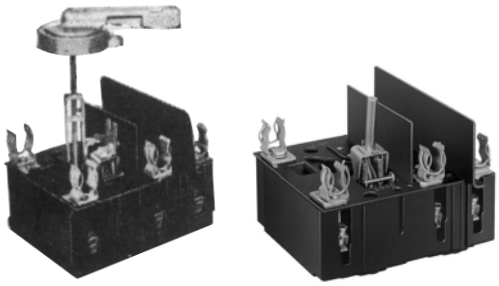

Contents

Description	*Page*
Product Overview	V2-T1-3
General Duty	V2-T1-26
Heavy-Duty	V2-T1-31
Six-Pole Switches	V2-T1-43
Double-Throw Switches	V2-T1-45
EnviroLine—Stainless Steel Switch	V2-T1-53
EnviroLine—Upper and Lower Window Switches	V2-T1-56
EnviroLine—Receptacle Switches	V2-T1-59
EnviroLine—Non-Metallic KRYDON Switch	V2-T1-61
Shunt Trip Safety SwitchShunt Trip Safety Switch	V2-T1-63
NEMA 7/9—Hazardous Location Disconnect Switch	V2-T1-66
Quick Connect Switches	V2-T1-68
Solar Disconnect Switch	V2-T1-70
316-Grade Stainless Steel Safety Switches	V2-T1-72
Mill-Duty Rated, Heavy-Duty, Fusible, Non-Fusible, Single-Throw	V2-T1-76
Heavy-Duty Fusible Safety Switches Accepting Cube Fuses	V2-T1-78
Elevator Control Switch	V2-T1-81
Auxiliary Power Heavy-Duty Safety Switch	V2-T1-83
Left-Handed Safety Switch	V2-T1-86
200% Neutral Safety Switches	V2-T1-87
Pringle Bolted Pressure Switch	V2-T1-88
Type DS, Fusible and Non-Fusible	V2-T1-91
Type Visi-Flex DE-ION	
Product Selection	V2-T1-95
Options and Accessories	V2-T1-96
Technical Data and Specifications	V2-T1-97
Flange Mounted—Variable Depth	V2-T1-98
Flange Mounted—Fixed Depth	V2-T1-102

Type Visi-Flex DE-ION

Product Description

Complete Model A switch styles with fuse or non-fuse kits mounted are UL listed. Refer to "Electrical Construction Materials List," miscellaneous switches. Switches only, no fuse, fuse clip kit and all Model T switches are recognized under the component program of Underwriters Laboratories. The external operating handle of Model A can be padlocked in the OFF position with up to three padlocks.

Terminal Data

- 30, Spec. 60A switches: #14–#4 Cu cable only
- 60, 100A switches #14–1/0 Cu cable only

Standards and Certifications

- UL 98

Reference Information

- Technical data: 29-420
- Dimension sheet: 29-470
- 30, Special 60A Model A drilling instructions: I.L. 15051
- 60, 100A Model A drilling instructions: I.L. 15052A
- 30, Special 60, 100A Model A and T auxiliary switch: I.L. 12641C
- 60, 100A Model A and T fuse kit: I.S. 12565C
- No fuse kit cover mounting: I.S. 12942B
- Fuse clip kits for Class R (1226C94G01-G05): I.L. 15491
- Fuse clip kits for Class R (1226C94G06-G11): I.L. 15492
- 200 ampere instruction leaflet: I.L. 12505

Product Selection

Model A

Model T

Switch Ordering Information

Continuous Ampere Rating	Fuse or No-Fuse Kit (see photos on Page V2-T1-96)	Model A, Adjustable Depth: Complete Unit Catalog Number ①	Model A, Adjustable Depth: Switch Only ② Catalog Number (see handle and shaft below, fuse kit at right)	Model T, Toggle Operated Switch Only ③ Catalog Number (see fuse kit at right)	Fuse Clip Kits for Model A or T NEC and Standard Time Delay ④⑤ (No-Fuse Kit—See Below): Clips for Class K or H Fuses Catalog Number	Fuse Clip Kits for Model A or T NEC and Standard Time Delay ④⑤ (No-Fuse Kit—See Below): Clips for Class R Fuses Only Catalog Number
30	No fuse ⑦	**2607D89G01**	**2607D63G02**	**371D392G02**	—	—
	30A/250V	**2607D89G02**	**2607D63G01**	**371D392G01**	**313C590G08**	**1226C94G01**
	60A/250V	**2607D89G03**	**2607D63G01**	**371D392G01**	**313C590G09**	**1226C94G03**
	100A/250V	**2607D89G04**	**2607D63G01**	**371D392G01**	**313C590G13**	**1226C94G05**
	30A/600V	**2607D89G05**	**2607D63G01**	**371D392G01**	**313C590G10**	**1226C94G02**
	60A/600V	**2607D89G06**	**2607D63G01**	**371D392G01**	**313C590G11**	**1226C94G04**
Special 60 ⑥	No fuse ⑦	**2607D89G07**	**2607D63G06**	**371D392G06**	—	—
	30A/250V	**2607D89G08**	**2607D63G05**	**371D392G05**	**313C590G08**	**1226C94G01**
	60A/250V	**2607D89G09**	**2607D63G05**	**371D392G05**	**313C590G09**	**1226C94G03**
	100A/250V	**2607D89G10**	**2607D63G05**	**371D392G05**	**313C590G13**	**1226C94G05**
	30A/600V	**2607D89G11**	**2607D63G05**	**371D392G05**	**313C590G10**	**1226C94G02**
	60A/600V	**2607D89G12**	**2607D63G05**	**371D392G05**	**313C590G11**	**1226C94G04**
60 ⑥	No fuse ⑦	**2607D90G01**	**2607D66G14**	**657D780G12**	—	—
	30A/250V	**2607D90G02**	**2607D66G13**	**657D780G11**	**177C880G23**	**1226C94G06**
	60A/250V	**2607D90G03**	**2607D66G13**	**657D780G11**	**177C880G12**	**1226C94G08**
	100A/250V	**2607D90G04**	**2607D66G13**	**657D780G11**	**177C880G13**	**1226C94G10**
	200A/250V	**2607D90G05**	**2607D66G13**	**657D780G11**	**177C880G14**	—
	30A/600V	**2607D90G06**	**2607D66G13**	**657D780G11**	**177C880G24**	**1226C94G07**
	60A/600V	**2607D90G07**	**2607D66G13**	**657D780G11**	**177C880G15**	**1226C94G09**
	100A/600V	**2607D90G08**	**2607D66G13**	**657D780G11**	**177C880G16**	**1226C94G11**
100	No fuse ⑦	**2607D91G07**	**2607D66G18**	**657D780G16**	—	—
	60A/250V	**2607D91G08**	**2607D66G17**	—	**177C880G12**	**1226C94G08**
	100A/250V	**2607D91G09**	**2607D66G17**	**657D780G15**	**177C880G13**	**1226C94G10**
	20A/250V	**2607D91G10**	**2607D66G17**	**657D780G15**	**177C880G14**	—
	60A/600V	**2607D91G11**	**2607D66G17**	—	**177C880G15**	**1226C94G09**
	100A/600V	**2607D91G12**	**2607D66G17**	**657D780G15**	**177C880G16**	**1226C94G11**
	200A/600V	**2607D91G13**	**2607D66G17**	**657D780G15**	**177C880G18**	—

Notes

① Model A shipped as basic switch, operating handle, shaft and fuse or no-fuse kit. Model T shipped as basic switch and fuse or no-fuse kit.
② External operating handle, shaft and fuse or no-fuse kit required.
③ Fuse or no-fuse kit required.
④ Includes fuse clips and Micarta barriers.
⑤ Will also accept non-rejection type current limiting fuses:
Bussmann: 15–60A type KTN and KTS (ferrule type), 65–200A type KTN and KTS (blade type)
Chase Shawmut: 15–60A type 1 (ferrule type), 65–200A type 3 (blade type)
Federal Pacific Electric®: 15–200A types NCL and SCL
⑥ Special 60A switch has same dimension as 30A Visi-Flex switch. Standard 60A switch has same dimension as 100A Visi-Flex switch.
⑦ Rated 600V.

Special Switches and Fuse Clips

Visi-Flex Switches with Auxiliary Switch Internally Mounted

Note: Basic switch only. Also order no-fuse kit, fuse kit, operating handle and shaft as required.

Ampere Rating	Catalog Number (for use without fuses)	Catalog Number (for use with fuses)
Model A		
30	**2607D63G04**	**2607D63G03**
Special 60	**2607D63G08**	**2607D63G07**
60	**2607D66G16**	**2607D66G15**
100	**2607D66G20**	**2607D66G19**
Model T		
30	**371D392G04**	**371D392G03**
Special 60	**371D392G08**	**371D392G07**
60	**657D780G14**	**657D780G13**
100	**657D780G18**	**657D780G17**

Special Fuse Kits

Fuse Clip Kit

No Fuse Kit

Current Limiting, Class J

Note: For Model A and/or T switches. Order in place of standard fuse clips.

Switch Type, Rating	Fuse Kit Rating	Catalog Number
Model A		
30	30A/600V	**503C690G01**
Special 60	60A/600V	**503C690G02**
	100A/600V	**503C690G03**
60	30A/600V	**503C690G15**
100	60A/600V	**503C690G16**
	100A/600V	**503C690G17**
	200A/600V	**503C690G18**
Model T		
30	30A/600V	**503C690G04**
Special 60	60A/600V	**503C690G05**
	100A/600V	**503C690G06**
60	30A/600V	**503C690G19**
100	60A/600V	**503C690G20**
	100A/600V	**503C690G21**
	200A/600V	**503C690G22**

Options and Accessories

Fuse Kits and Shaft

Description	Catalog Number
No fuse kits (for Models A or T)	
30, special 60A switches	**313C590G14**
60, 100A switches	**313C363G11**
Model A external operating handle	**504C323G07**
Model A Standard Shaft	
30, special 60A switches	**2607D64G01** ①
60, 100A switches	**2607D65G01** ②

Auxiliary Switch Kits for Model A and T Switches

Note: Permits field mounting of an auxiliary switch for separate control circuit applications. Provides an SPDT switch with 1A and/or 1B contacts. Includes three identified 18-inch soldered leads.

For Use With	Complete Kit Catalog Number
30 and special 60A switch	**315C293G01** ③
60 and 100A switch	**315C293G01** ③

Extra Long Vari-Depth Shaft for Model A Switches

Note: Order in place of standard shaft when required.

Switch Ampere Rating	Panel Depth in Inches (mm) Long Shaft	Catalog Number
30	8.19–13.06 (208.0–331.7) ④	**2607D65G02**
Special 60	8.19–13.06 (208.0–331.7) ④	**2607D65G02**
60	9.41–14.3 (239.0–358.9)	**2607D65G02**
100	9.41–14.3 (239.0–358.9)	**2607D65G02**

Notes

① For use with panels 5.06–8.19 inches (128.5–208.0 mm) deep.
② For use with panels 5.19–9.97 inches (131.8–253.2 mm) deep.
③ Order Instruction Sheet 12641.
④ For panel depth of 8.19–9.94 inches (208.0–252.5 mm), a minimum of 1.75 inch must be cut from bottom of shaft.

Technical Data and Specifications

Maximum Horsepower Ratings

Fuse Clip Ratings	Maximum Horsepower Ratings 120 Vac Standard	120 Vac Time Delay	240 Vac Standard	240 Vac Time Delay	480 Vac Standard	480 Vac Time Delay	600 Vac Standard	600 Vac Time Delay	250 Vdc
30A Switch									
Unfused	3	—	7-1/2	—	20	—	25	—	5
30A/250V	1-1/2	3	3	7-1/2	—	—	—	—	5
60A/250V	3	—	5	—	—	—	—	—	5
100A/250V	3	—	5	—	—	—	—	—	5
30A/600V	—	—	—	—	5	15	7-1/2	20	5
60A/600V	—	—	—	—	15	—	20	—	5
60A Switch (and Special 60 Ampere Switch)									
Unfused	7-1/2	—	20	—	40	—	50	—	10
30A/250V	1-1/2	3	3	7-1/2	—	—	—	—	5
60A/250V	3	7-1/2	7-1/2	15	—	—	—	—	10
100A/250V	—	—	15	—	—	—	—	—	10
200A/250V ①	—	—	15	—	—	—	—	—	—
30A/600V	—	—	—	—	5	15	7-1/2	20	5
60A/600V	—	—	—	—	15	30	15	50	10
100A/600V ①	—	—	15	—	25	30	30	50	10
100A Switch									
Unfused	15	—	30	—	60	—	75	—	20
30A/250V	1-1/2	3	3	7-1/2	—	—	—	—	5
60A/250V	3	7-1/2	7-1/2	15	—	—	—	—	10
100A/250V	15	15	15	30	—	—	—	—	20
200A/250V	15	15	15	30	—	—	—	—	20
30A/600V	—	—	—	—	5	15	7-1/2	20	—
60A/600V	—	—	—	—	15	30	15	50	—
100A/600V	—	—	—	—	25	60	30	75	—
200A/600V	—	—	—	—	25	60	30	75	—

Note

① Does not apply to special 60A switch since these fuse clips cannot be added.

Complete Operating Mechanism—C361NE1

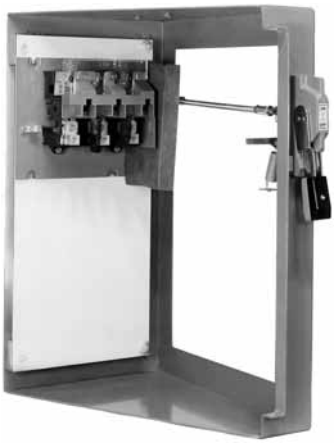

Contents

Description	Page
Product Overview	V2-T1-3
General Duty	V2-T1-26
Heavy-Duty	V2-T1-31
Six-Pole Switches	V2-T1-43
Double-Throw Switches	V2-T1-45
EnviroLine—Stainless Steel Switch	V2-T1-53
EnviroLine—Upper and Lower Window Switches	V2-T1-56
EnviroLine—Receptacle Switches	V2-T1-59
EnviroLine—Non-Metallic KRYDON Switch	V2-T1-61
Shunt Trip Safety SwitchShunt Trip Safety Switch	V2-T1-63
NEMA 7/9—Hazardous Location Disconnect Switch	V2-T1-66
Quick Connect Switches	V2-T1-68
Solar Disconnect Switch	V2-T1-70
316-Grade Stainless Steel Safety Switches	V2-T1-72
Mill-Duty Rated, Heavy-Duty, Fusible, Non-Fusible, Single-Throw	V2-T1-76
Heavy-Duty Fusible Safety Switches Accepting Cube Fuses	V2-T1-78
Elevator Control Switch	V2-T1-81
Auxiliary Power Heavy-Duty Safety Switch	V2-T1-83
Left-Handed Safety Switch	V2-T1-86
200% Neutral Safety Switches	V2-T1-87
Pringle Bolted Pressure Switch	V2-T1-88
Type DS, Fusible and Non-Fusible	V2-T1-91
Type Visi-Flex DE-ION	V2-T1-94
Flange Mounted—Variable Depth	
Product Selection	V2-T1-99
Accessories	V2-T1-100
Dimensions	V2-T1-101
Flange Mounted—Fixed Depth	V2-T1-102

Flange Mounted—Variable Depth

Product Description

Type C361 disconnect switches are suitable for installation in control enclosures having a right-hand flange. Fusible disconnect switches will accept R fuses as standard. Field installable rejection kits are supplied as standard on 100 and 200A clips. For 30 and 60A rejection clips, see footnote ④ on next page. The switch is UL component recognized for use on systems with up to 200,000 rms symmetrical amperes available fault current when Class R clips are supplied.

Standards and Certifications

- UL—Component File E55492
- CSA—LR353-439

Product Selection

C361NE1

Operating Mechanism Variable Depth with Disconnect Switch—Right-Hand Mounting

Disconnect Switch Size (Amperes)	Variable Depth Mtg. Range Min./Max. (Inches) ①	Maximum Horsepower Ratings ② AC System Volts (Motor Volts) 208 (200)	240 (230)	480 (460)	600 (575)	DC Using Two Poles 250V Max.	Fuse Clip Rating (Amperes) Non-Interchangeable Type for Class H, J, K or R Type Fuses Only 250V	600V	Switch and Operating Mechanism Only DOES NOT Include Handle Catalog Number	Switch and Operating Mechanism with 4-Inch Handle ③ For NEMA 1 or 12 Enclosure Catalog Number	For NEMA 4 Enclosure Catalog Number
30	7 to 16	7-1/2	7-1/2	15	20	5	Non-fusible		**C361NC**	**C361NC1**	**C361NC2**
							30	—	**C361SC21**	**C361SC121** ④	**C361SC221** ④
							60	30	**C361SC61**	**C361SC161** ④	**C361SC261** ④
60	7 to 16	15	15	30	50	10	Non-fusible		**C361ND**	**C361ND1**	**C361ND2**
							60	30	**C361SD22**	**C361SD122** ④	**C361SD222** ④
							—	60	**C361SD62**	**C361SD162** ④	**C361SD262** ④
100	7 to 16	25	30	60	75	20	Non-fusible		**C361NE**	**C361NE1**	**C361NE2**
							100	100	**C361SE263**	**C361SE1263**	**C361SE2263**
200	7 to 16	40	60	125	150	40	Non-fusible		**C361NF1**	**C361NF1**	**C361NF2**
							200	200	**C361SF264**	**C361SF1264**	**C361SF2264**

C361H1

Handle Only

Application	Operating Handle Length in Inches (mm)	NEMA Type Enclosure	Catalog Number
For use with 30, 60 100 and 200A disconnect switches	4.00 (101.6)	1-12	**C361H1**
	4.00 (101.6)	4	**C361H2**
	6.00 (152.4)	1-12	**C361H3**
	6.00 (152.4)	4	**C361H4**

Notes

① Dimension shown is from panel to flange surface.
② Refers to rating of switch only.
③ Components individually boxed and shipped in overpack carton.
④ For rejection clips, add Suffix Letter **R** to listed Catalog Number. Example: C361SC121**R**.

Accessories

Type C361 NEMA 12 Safety Door Hardware

Type C361 door hardware kits are designed to function with all C361 and C371 disconnect switches and circuit breaker operating mechanisms.

These kits are designed for use with small enclosures up to 40 inches (1016 mm), intermediate 40–60 inches (1016–1524 mm) or larger floor cases over 60 inches (1524 mm) to provide enclosure sealing and protection against unauthorized entry. These kits can be used on enclosure flanges with material thickness ranging from 16 gauge through 3/16 inches with flanges on the right side only. Door hardware kits are to be installed in a commercially available enclosure. Consult the enclosure manufacturer application data for proper kit selection.

NEMA 12 Safety Door Hardware

Type C361 NEMA 12 Safety Door Hardware

Handle Length (Inches)	Catalog Number ①
4	**C361KJ4**
6	**C361KJ6**
Roller Latch ②	**C361KR**

Interlocks and Connecting Rod

Electrical Interlocks

Circuit	Catalog Number
1NO-1NC	**DS200EK1**
2NO-2NC	**DS200EK2**

Connecting Rods—Increase Maximum Allowable Depth by 5 Inches

Application	Catalog Number
Disconnect switches 30, 60, 100 and 200A Circuit breakers 150, 250 and 400A	**C371CS1**
Circuit breakers 600, 800 and 1200A	**C371CS2**

Notes

① The 1/4-inch x 1/2-inch standard mill rectangular locking bar is not supplied with these kits.
② Third roller latch for use with 4 or 6-inch handle when three-point latching is required.

Dimensions

Approximate Dimensions in Inches (mm)

Mounting Dimension Requirements in Inches (mm)

Disconnect Switch Type	A	B	C	D	E	F	G
30A and 60A non-fusible	See dimensions below	See dimensions below	1.56 (39.6)	0.96 (24.4)	4.00 (101.6)	3.50 (88.9)	7.12 (180.8)
30A and 60A fusible			1.56 (39.6)	0.96 (24.4)	4.00 (101.6)	3.50 (88.9)	9.75 (247.7)
100A non-fusible			1.75 (44.5)	1.10 (27.9)	5.50 (139.7)	3.38 (85.9)	7.12 (180.8)
100A fusible			1.75 (44.5)	1.10 (27.9)	5.50 (139.7)	3.38 (85.9)	11.88 (301.8)
200A non-fusible and fusible			3.34 (84.8)	0.63 (16.0)	8.50 (215.9)	1.84 (46.7)	15.50 (393.7)

Mounting Dimension Requirements

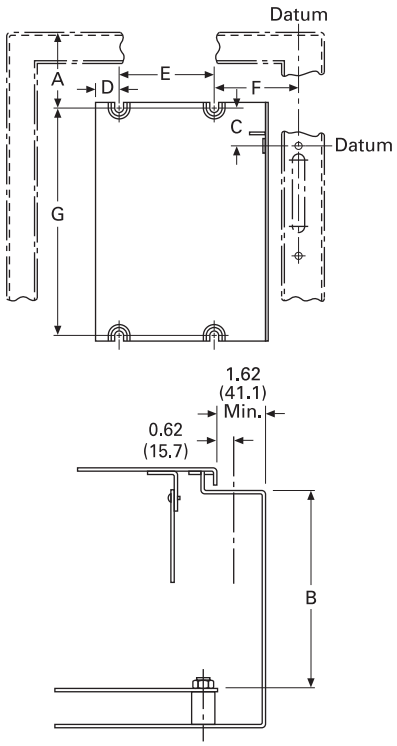

Line Lug Data

Disconnect Switch Size	Wire Size
30A	#2–14 Cu/Al
60A	#2–14 Cu/Al
100A	1/0–14 Cu/Al
200A	250 kcmil–#6 Cu/Al

Dimension A = The required wire bending spacing selected from Article 430.10 of the National Electrical Code.

Dimension B = Minimum or maximum depth from inside of flange holding operating handle to panel where disconnect switch is mounted (variable 7 to 16 inches).

Fixed Depth Application

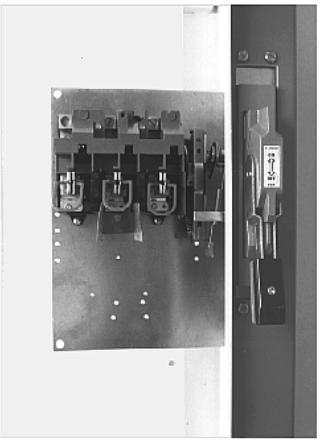

Contents

Description	*Page*
Product Overview	**V2-T1-3**
General Duty	**V2-T1-26**
Heavy-Duty	**V2-T1-31**
Six-Pole Switches	**V2-T1-43**
Double-Throw Switches	**V2-T1-45**
EnviroLine—Stainless Steel Switch	**V2-T1-53**
EnviroLine—Upper and Lower Window Switches	**V2-T1-56**
EnviroLine—Receptacle Switches	**V2-T1-59**
EnviroLine—Non-Metallic KRYDON Switch	**V2-T1-61**
Shunt Trip Safety SwitchShunt Trip Safety Switch	**V2-T1-63**
NEMA 7/9—Hazardous Location Disconnect Switch	**V2-T1-66**
Quick Connect Switches	**V2-T1-68**
Solar Disconnect Switch	**V2-T1-70**
316-Grade Stainless Steel Safety Switches	**V2-T1-72**
Mill-Duty Rated, Heavy-Duty, Fusible, Non-Fusible, Single-Throw	**V2-T1-76**
Heavy-Duty Fusible Safety Switches Accepting Cube Fuses	**V2-T1-78**
Elevator Control Switch	**V2-T1-81**
Auxiliary Power Heavy-Duty Safety Switch	**V2-T1-83**
Left-Handed Safety Switch	**V2-T1-86**
200% Neutral Safety Switches	**V2-T1-87**
Pringle Bolted Pressure Switch	**V2-T1-88**
Type DS, Fusible and Non-Fusible	**V2-T1-91**
Type Visi-Flex DE-ION	**V2-T1-94**
Flange Mounted—Variable Depth	**V2-T1-98**
Flange Mounted—Fixed Depth	
Accessories	**V2-T1-103**
Technical Data and Specifications	**V2-T1-103**

Flange Mounted—Fixed Depth

Product Description

Type C361 disconnect switches are suitable for installation in control enclosures having a right-hand flange. Fusible disconnect switches will accept R fuses as standard. Field installable rejection kits are supplied as standard on 100 and 200A clips. For 30 and 60A rejection clips, see **Page V2-T1-99**. The switch is UL component recognized for use on systems for use on systems with up to 200,000 rms symmetrical amperes available fault current when Class R clips are supplied.

- Minimum depth—flange to panel
  - 30–60A: 6.50 inches
  - 100A: 7 inches

Product Selection

Fixed Depth Application

Operating Mechanism Fixed Depth with Disconnect Switch—Right-Hand Mounting

Disconnect Switch Size (Amperes)	Maximum Horsepower Ratings ① AC System Volts (Motor Volts) 208 (200)	240 (230)	480 (460)	600 (575)	DC Using Two Poles 250V Maximum	Fuse Clip Rating (Amperes) Non-Interchangeable Type for Class H, J, K or R Type Fuses Only 250V	600V	Switch and Operating Mechanism with 4-Inch Handle For NEMA 1 or 12 Enclosure Catalog Number
30	7-1/2	7-1/2	15	20	5	Non-fusible		**C361FNC1**
						30	—	**C361FSC121** ②
						60	30	**C361FSC161** ②
60	15	15	30	50	10	Non-fusible		**C361FND1**
						60	30	**C361FSD122** ②
						—	60	**C361FSD162** ②
100	25	30	60	75	20	Non-fusible		**C361FNE1**
						100	100	**C361FSE1263**

Notes

① Refers to rating of switch only.

② For Rejection Clips, add Suffix Letter **R** to listed Catalog Number. Example: C361FSC121**R**.

Accessories

Electrical Interlocks

Circuit	Catalog Number
1NO-1NC	**DS200EK1**
2NO-2NC	**DS200EK2**

Technical Data and Specifications

Line Lug Data

Disconnect Switch Size	Wire Size
30A	#2–14 Cu/Al
60A	#2–14 Cu/Al
100A	1/0–14 Cu/Al
200A	250 kcmil–#6 Cu/Al

Dimensions

Approximate Dimensions in Inches (mm)

Frame Size

Description	A	B	C	D	E
30–60A disconnect switch	8.63 (219.2)	11.38 (289.1)	6.50 (165.1)	1.50 (38.1)	9.50 (241.3)
150A circuit breaker	8.63 (219.2)	11.38 (289.1)	6.50 (165.1)	1.50 (38.1)	9.50 (241.3)
100A disconnect switch	9.88 (251.0)	13.38 (339.9)	7.00 (177.8)	1.25 (31.8)	11.75 (298.5)
250A circuit breaker	9.88 (251.0)	13.38 (339.9)	7.00 (177.8)	1.25 (31.8)	11.75 (298.5)
400A circuit breaker	9.88 (251.0)	13.38 (339.9)	7.00 (177.8)	1.25 (31.8)	11.75 (298.5)

Approximate Dimensions

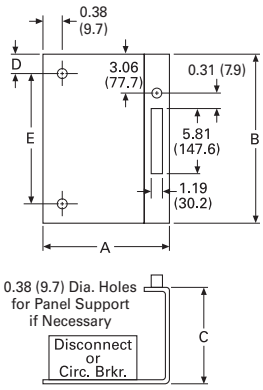

Enclosed Circuit Breakers

Contents

Description	*Page*
Features, Benefits and Functions	**V2-T1-105**
Standards and Certifications	**V2-T1-105**
Cross-Reference	**V2-T1-106**
Product Selection	**V2-T1-108**
Accessories	**V2-T1-110**
Flex Center	**V2-T1-112**
Technical Data and Specifications	**V2-T1-113**
Dimensions	**V2-T1-115**

Product Description

- 15–1200A
- Enclosed device used to open and close a circuit

Application Description

NEMA 1 General Purpose

Surface or Flush Mounting 15–1200A, 600 Vac, 500 Vdc

NEMA 1 enclosed breakers are designed for indoor use in commercial buildings, apartment buildings and other areas where a general purpose enclosure is applicable. The breaker is front operable and is capable of being padlocked in the OFF position. Ratings through 1200A are listed with Underwriters Laboratories as suitable for service entrance application. Both surface and flush mounted enclosures are available.

NEMA 1 General Purpose

NEMA 3R Rainproof Surface Mounting ①

Interchangeable Hubs (through 400A) 15–1200A, 600 Vac, 500 Vdc

This general purpose outdoor service center employs a circuit breaker inside a weatherproof sheet steel enclosure to serve as a main disconnect and protective device for feeder circuits. The breaker is front operable and is capable of being padlocked in the OFF position. Ratings through 1200A are listed by Underwriters Laboratories as suitable for service entrance application.

NEMA 3R Rainproof Surface Mounting

Note

① SFDN enclosed breakers do not have a door interlock to prevent door from being opened when breaker is "ON."

NEMA 4/4X, 5 Water and Dustproof

Stainless Steel—Type 304 Surface Mounting 15–1200A, 600 Vac, 500 Vdc

This enclosure meets NEMA 4/4X and 5 requirements for water and dustproof applications and has no knockouts or other openings. It is particularly well suited for use in dairies, borax mines, breweries, paper mills and other process industries. The operating handle can be padlocked in the OFF position, and is interlocked to prevent the door from opening when the breaker is ON. Ratings through 1200A are Underwriters Laboratories listed as suitable for service entrance application.

NEMA 4/4X Water and Dustproof

NEMA 12 Dustproof Surface Mounting

No Knockouts or Other Openings 15–1200A, 600 Vac, 500 Vdc

The Type 12 enclosure is designed in line with specifications for special industry application where unusually severe conditions involving oil, coolant, dust and other foreign materials exist in the operating atmosphere. The handle padlocks in the OFF position and the cover is interlocked with the handle mechanism to prevent opening the cover with the circuit breaker in the ON position. Ratings through 1200A are UL listed as suitable for service entrance application. A NEMA 12 semi-dust-tight design that includes knockouts is available. These units are rated 15–400A, 600 Vac, 500 Vdc.

NEMA 12 Dustproof Surface Mounting

NEMA 7/9 Hazardous Location

Cast Aluminum, Explosion-proof Surface Mounting 15–1200A, 600 Vac, 250 Vdc

Hazardous location, Type 7: Class I, Groups B, C, D; Type 9: Class II, Groups E, F, G. This special service cast aluminum enclosure is supplied with a wide, machined flanged cover to prevent igniting outside atmospheres by arcing from inside the enclosure. Front operable, the handle padlocks in the OFF position. Enclosures rated 600A and above have lift-off hinges for ease of assembly.

Note: XFDN050B is not Group B compliant.

NEMA 7/9 Hazardous Location

Features, Benefits and Functions

- Side-opening door on NEMA 3R enclosures
- Padlockable in the OFF position
- Surface or flush mounted enclosures available through 400A on NEMA 1 enclosures
- Interlocked handle on NEMA 3R, 4/4X, 5 and 12 enclosures to prevent opening when the breaker is in the ON position
- Interchangeable hubs
- Numerous factory options

Standards and Certifications

- UL 489
- CSA 22.2
- NEMA 250

NEMA 1 General Purpose

- UL File No. E7819
- CSA File No. LR84319

NEMA 3R Rainproof Surface Mounting

- UL File No. E7819
- CSA File No. LR84319

NEMA 4/4X, 5 Water and Dustproof

- UL File No. E7819
- CSA File No. LR84319

NEMA 12 Dustproof Surface Mounting

- UL File No. E7819
- CSA File No. LR84319

NEMA 7/9 Hazardous Location

- UL File No. E84577
- CSA File No. LR42131-6

1

Cross-Reference

Enclosed Circuit Breaker Competitive Catalog Numbers

NEMA Rating	Catalog Number Eaton Enclosure	Eaton Breaker	Square D Enclosure	Square D Breaker	Siemens Enclosure	Siemens Breaker	General Electric Enclosure	General Electric Breaker
1 surface	**SGDN100**	**GHC3100**	EHB125NS	EHB34100	—	—	—	—
1 flush	**—**	**—**	EHB125NF	EHB34100	—	—	—	—
3R	**RGDN100**	**GHC3100**	EHB125NRB	EHB34100	—	—	—	—
12	**JGDN100**	**GHC3100**	—	—	—	—	—	—
4/4X	**WGDN100**	**GHC3100**	—	—	—	—	—	—
1 surface	**SFDN100**	**EHD3100L**	FA100S	FAL34100	E2N1S	ED43B100	TE100S	TED134100WL
1 flush	**FFDN100**	**EHD3100L**	FA100F	FAL34100	E2N1F	ED43B100	TE100F	TED134100WL
3R	**RFDN100**	**EHD3100L**	FA100RB	FAL34100	E2N3R	ED43B100	TE100R	TED134100WL
12/3R	**—**	**—**	FA100AWK	FAL34100	—	—	—	—
12	**JFDN100**	**EHD3100L**	—	—	E2N12	ED43B100	TE100J/SE100J	TED134100WL
4/4X	**WFDN100**	**EHD3100L**	FA100DS	FAL34100	ED6SS4	ED43B100	TE100CS/SE100CS	TED134100WL
7/9	**XFDN050**	**EHD3050L**	FA060X	FAL34060	EA	ED43B100	—	—
9	**—**	**—**	FA060Y	FAL34060	—	—	—	—
7/9	**XFDN225B** ①	**FD3225L**	FA100X	FAL34100	EB	ED43B100	—	—
9	**—**	**—**	FA100Y	FAL34100	—	—	—	—
1 surface	**SFDN225** ①	**FDB3150L**	—	—	E2N1S	ED43B125	TE150S	TED134150WL
1 flush	**FFDN225** ①	**FDB3150L**	—	—	E2N1F	ED43B125	TE150F	TED134150WL
3R	**RFDN225** ①	**FDB3150L**	—	—	E2N3R	ED43B125	TE150R	TED134150WL
12	**JFDN225** ①	**FDB3150L**	—	—	E2N12	ED43B125	—	—
4/4X	**WFDN225** ①	**FDB3150L**	—	—	ED6SS4	ED43B125	—	—
7/9	**XFDN225B** ①	**FDB3150L**	—	—	—	—	—	—
1 surface	**SFDN225** ①	**FD3225L**	—	—	—	—	—	—
1 flush	**FFDN225** ①	**FD3225L**	—	—	—	—	—	—
3R	**RFDN225** ①	**FD3225L**	—	—	—	—	—	—
12	**JFDN225** ①	**FD3225L**	—	—	—	—	—	—
4/4X	**WFDN225** ①	**FD3225L**	—	—	—	—	—	—
7/9	**XFDN225B** ①	**FD3225L**	—	—	—	—	—	—
1 surface	**SJDN250**	**JDB3250**	KA225S	KAL36250	F6N1S	FXD63B250	TF225S	TFJ236225WL
1 flush	**FJDN250**	**JDB3250**	KA225F	KAL36250	F6N1F	FXD63B250	TF225F	TFJ236225WL
3R	**RJDN250**	**JDB3250**	KA225RB	KAL36250	F6N3R	FXD63B250	TF225R	TFJ236225WL
12/3R	**—**	**JDB3250**	KA225AWK	KAL36250	—	—	—	—
12	**JJDN250**	**JDB3250**	—	—	F6N12	FXD63B250	TF225J/SF250J	TFJ236225WL
4/4X	**WJDN250**	**JDB3250**	KA225DS	KAL36250	FD6SS4	FXD63B250	TF225CS/SF250CS	TFJ236225WL
7/9	**XJDN250B**	**—**	KA225X	KAL36250	EC2	FXD63B250	—	—
9	**—**	**—**	KA225Y	KAL36250	—	—	—	—

Note

① Maximum wire size 4/0.

Enclosed Circuit Breaker Competitive Catalog Numbers, continued

NEMA Rating	Catalog Number Eaton Enclosure	Eaton Breaker	Square D Enclosure	Square D Breaker	Siemens Enclosure	Siemens Breaker	General Electric Enclosure	General Electric Breaker
1 surface	**SKDN400** ①	**KDB3400**	LA400S	LAL36400	J6N1	JXD63B400	TJ400S/SG400S	TJK436400WL
1 flush	**FKDN400** ①	**KDB3400**	LA400F	LAL36400	—	—	TJ400F/SG400F	TJK436400WL
3R	**RKDN400** ①	**KDB3400**	LA400R	LAL36400	J6N3R	JXD63B400	TJ400R/SG400R	TJK436400WL
12/3R	—	—	LA400AWK	LAL36400	—	—	—	—
12	**JKDN400** ①	**KDB3400**	—	—	J6N12	JXD63B400	TJ400J/SG400J	TJK436400WL
4/4X	**WKDN400** ①	**KDB3400**	LA400DS	LAL36400	—	—	TJ400CS/SG400CS	TJK436400WL
7/9	**XKDN400B** ①②	**KDB3400**	—	—	EE	JXD63B400	—	—
1 surface	**SLDN600**	**LDB3600**	MA1000S	MAL36600	LD6N1	LXD63B600	TJ600S/SG600S	TJK636600WL
1 flush	—	—	MA1000F	MAL36600	—	—	TJ600F/SG600F	TJK636600WL
3R	**RLDN600**	**LDB3600**	—	—	LD6N3R	LXD63B600	TJ600R/SG600R	TJK636600WL
12/3R	—	—	MA1000AWK	MAL36600	—	—	—	—
12	**JLDN600**	**LDB3600**	—	—	LD6N12	LXD63B600	TJ600J/SG600J	TJK636600WL
4/4X	**WLDN600**	**LDB3600**	MA1000DS	MAL36600	LD6SS4	LXD63B600	TJ600CS	TJK636600WL
7/9	**XMCN800B**	**LDB3600**	—	—	ED6	LXD63B600	—	—
1 surface	**SNDN1200**	**MDL3800**	MA1000S	MAL36800	LMD1	MXD63B800	TK4V1200S	TKMA836800WL
1 flush	—	—	MA1000F	MAL36800	—	—	TK4V1200F	TKMA836800WL
3R	**RNDN1200**	**MDL3800**	—	—	LMD3R	MXD63B800	TKV41200R	TKMA836800WL
12/3R	—	—	MA1000AWK	MAL36800	—	—	—	—
12	**JNDN1200**	**MDL3800**	—	—	LMD12	MXD63B800	TK4V1200J/SK1200	TKMA836800WL
4/4X	**WNDN1200**	**MDL3800**	MA1000DS	MAL36800	—	—	—	—
7/9	**XMCN800B**	**MDL3800**	—	—	—	—	—	—
1 surface	**SNDN1200**	**ND312T33W**	MA1000S	MAL361000	—	—	—	—
1 flush	—	—	MA1000F	MAL361000	—	—	—	—
3R	**RNDN1200**	**ND312T33W**	—	—	—	—	—	—
12/3R	—	—	MA1000AWK	MAL361000	—	—	—	—
12	**JNDN1200**	**ND312T33W**	—	—	—	—	—	—
4/4X	**WNDN1200**	**ND312T33W**	MA1000DS	MAL361000	—	—	—	—
1 surface	**SNDN1200**	**ND312T33W**	—	—	MND61	NXD63B120	TK4V1200S	TKMA31200WL
12	—	—	—	—	—	—	TK4V1200F	TKMA31200WL
3R	**RNDN1200**	**ND312T33W**	—	—	MND63	NXD63B120	TKV41200R	TKMA31200WL
1 surface	—	—	NA1200AWK	NAL361200	—	—	—	—
12	**JNDN1200**	**ND312T33W**	—	—	MND612	NXD63B120	TK4V1200J/SK1200	TKMA31200WL
4/4X	**WNDN1200**	**ND312T33W**	—	—	—	—	—	—
7/9	**XNDN1200B** ②	**ND312T33W**	—	—	—	—	—	—

Notes

① Maximum wire size 500 kcmil.

② Through-feed only.

1

Product Selection

1. Use the data on **Page V2-T1-119** to determine type of enclosure required.
2. Use the data on **Page V2-T1-113** and **V2-T1-114** to determine circuit breaker required.
3. **Pages V2-T1-115** through **V2-T1-121** include rough-in dimensional information.

Enclosure Only—Series C Breakers

Breaker Frame	Breaker Ampere Range	Enclosure NEMA Class	Catalog Number
Series C Breakers			
GHC, GD (two- and three-pole only) GHCGFEP (single-pole only)	15–100	1 surface	**SGDN100** ①
		3R	**RGDN100**
		12	**JGDN100**
		4/4X, 5 stainless steel	**WGDN100**
EHD, FD, FDB, HFD, ED, EDH, EDB, EDS, FDC, FDE, HFDE, HFDDC	15–100	1 surface	**SFDN100**
		1 flush	**FFDN100**
		3R	**RFDN100**
		12	**JFDN100**
		4/4X, 5 stainless steel	**WFDN100**
EHD, FD, FDB	15–50	7/9 cast aluminum	**XFDN050B**
HFD, FDC	60–225 ②	7/9 cast aluminum	**XFDN225B**
FD, FDB, HFD, ED, EDH, EDC, FDC (15–225 A) EDB, EDS, FDE, HFDE, FDCE, HFDDC	125–225	1 surface	**SFDN225**
		1 flush	**FFDN225**
		3R	**RFDN225**
		12	**JFDN225**
		4/4X, 5 stainless steel	**WFDN225**
JD, JDB, HJD, JDC	125–250	1 surface	**SJDN250**
		1 flush	**FJDN250**
		3R	**RJDN250**
		12	**JJDN250**
		4/4X, 5 stainless steel	**WJDN250**
JD, JDB, HJD, JDC	125–250	7/9 cast aluminum	**XJDN250B**
KD, KDB, HKD, KDC, DK HKDB ③, CKD, CHKD, KDB, HKDDC	125–400	1 surface	**SKDN400**
		1 flush	**FKDN400**
		3R	**RKDN400**
		12	**JKDN400**
		4/4X, 5 stainless steel	**WKDN400**

Enclosure Only—Series C Breakers, continued

Breaker Frame	Breaker Ampere Range	Enclosure NEMA Class	Catalog Number
Series C Breakers, continued			
KD, KDB, HKD, KDC, DK	125–400	7/9 cast aluminum	**XKDN400B**
LGE, LGS, LGH	250–600	1 surface	**SLG630**
		3R	**RLG630**
		12	**JLG630** ⑤
		4/4X, 5 stainless steel	**WLG630**
LD, LDB, HLD ④, HLDB, LDCB	300–600	1 surface	**SLDN600**
		3R	**RLDN600**
		12	**JLDN600**
		4/4X, 5 stainless steel	**WLDN600**
		7/9 cast aluminum	**XLDN600B**
LD, LDB, HLD	300–600	7/9 cast aluminum	**XMCN800B**
MDL, HMDL	400–800		
MDL, HMDL, ND, HND ④ MPS, MPH, HMDL, MDLB, HMDLDC, HMDLB, MDLPV Molded Case Switches (w/ WK suffix)— MDL, MDLB, HMDL, HLDLC, ND, HND, HMDLDC Molded Case Switches (w/ K suffix)— MPS Molded Case Switches (w/ SE suffix)— NGK	400–1200	1 surface	**SNDN1200**
		3R	**RNDN1200**
		12	**JNDN1200**
		4/4X, 5 stainless steel	**WNDN1200**
ND, HND	—	7/9 cast aluminum	**XNDN1200B**

Notes

① Suitable for use with single-pole breaker. Base mounting plate kit. QCCBP required.
② Maximum wire size: 4/0.
③ Not applicable for XKDN400B.
④ Short-circuit ratings are limited for high interrupting rated breakers. Refer to **Page V2-T1-113**.
⑤ Can be field converted to NEMA Type 3R.

Enclosure Only—Series G Breakers

Breaker Frame	Breaker Ampere Range	Enclosure NEMA Class	Catalog Number
Series G Breakers			
LGE, LGS, LGH	250–600	1 surface	**SLG630** ①
		3R	**RLG630** ①
		12	**JLG630** ①
		4/4X, 5 st. steel	**WLG630** ①
NG, NGS, NGH	320–1200	1 surface	**SNDN1200**
		3R	**RNDN1200**
		12	**JNDN1200**
		4/4X, 5 st. steel	**WNDN1200**

Enclosure Only—Earth Leakage Breakers

Breaker Frame	Breaker Ampere Range	Enclosure NEMA Class	Catalog Number
Earth Leakage Breakers			
ELFD, ELHFD and ELFDC (three-pole only)	15–100	1 surface	**SFD100E**
		1 flush	**FFD100E**
		3R	**RFDN100E**
		12	**JFDN100E**
		4/4X	**WFDN100E**
LGE, LGS, LGH used with ELLBN	250–600	1 surface	**SLG630E**
		3R	**RLG630**
		12	**JLG630** ②
		4/4X, 5 st. steel	**WLG630**

Enclosure Only Catalog Numbers for 100% Rated Circuit Breakers

Breaker Frame ③	Breaker Ampere Range	Enclosure NEMA Class	Catalog Number
CKD, CHKD	125–400	1 surface	**SKDN400**
		1 flush	**FKDN400**
		3R	**RKDN400**
		12	**JKDN400**
		12K	**DKDN400**
		4/4X, 5 st. steel	**WKDN400**
		7/9 cast alum.	**XKDN400B**
LGE...C ④ LGS...C ④ LGH...C ④	250–600	1 surface	**SLG630**
		3R	**RLG630**
		12	**JLG630**
		4/4X, 5 st. steel	**WLG630**
CMDL, CHMDL	400–800	1 surface	**SCNDN1200**
		3R	**RCNDN1200**
CND ⑤, CHND ⑤, CNDC ⑤⑥, NGH...C ⑤⑥	1200	1 surface	**SCNDN1200**
		3R	**RCNDN1200**

Notes

① Three- or four-pole.
② Can be field converted to NEMA Type 3R.
③ Breaker frames include both thermal magnetic and electronic trip versions.
④ Cu conductors only.
⑤ Cu conductors only, 90 °C wire sized at 75 °C ampacity. Conductor extensions and barriers required.
⑥ Maximum interruption ratings as follows, 100 kAIC at 240 Vac, 65 kAIC at 480 Vac, 35 kAIC at 600 Vac, 30 kAIC at 250 Vdc, 30 kAIC at 500 Vdc.

Accessories

Nameplates Applied

Customer must provide nameplate legend at the time of order.

Key Interlock Systems

Interlocks are used to prevent an authorized operation. Before system construction can begin, the following information must be known:

1. User—name, address and telephone number.
2. Complete lock scheme required.

Neutral Assemblies Installed

Ampere ratings: 100, 250, 400, 600, 800 and 1200.

Separate Ground Lug Installed

Ampere ratings: 100, 250, 400, 600 and 1200.

Special Paint Finish

Contact the Safety Switch Flex Center (1-888-329-9272) or FlexSwitches@eaton.com.

Pilot Light On NEMA 1 Enclosure

Pilot light

Stainless Steel Flush Covers

Frames: P, J and K.

Assembled Enclosed Circuit Breakers

Accessories	Modifications	Breaker Frame	Description
Auxiliary switches (specify voltage and Hz)	a	G, F, J, K, L, M, N	1A, 1B
		G, F, J, K, L, M, N	2A, 2B
	b	K, L, M, N	3A, 3B
		R	1A, 1B
Shunt trips (specify voltage and Hz)	ST a	G, F, J, K, L, M, N, R	—
Alarm switches (specify voltage and Hz)	Make Break	G, F, J, K, L, M, N	1 Make, 1 Break
		F, K, L, M, N	2 Make, 2 Break
Undervoltage release (specify voltage and Hz)	ST	G, F, J, K, L, M, N, R	—

Electronic Trip Options

Frame Type	Number of Poles	Description
KD, HKD	3	RMS 310 LS
		RMS 310 LSI
		RMS 310 LSG ①
		RMS 310 LSIG ①
LD, HLD	3	RMS 310 LS
		RMS 310 LSI
		RMS 310 LSG ①
		RMS 310 LSIG ①
MDL, HMDL	3	RMS 310 LS
		RMS 310 LSI
		RMS 310 LSG ①
		RMS 310 LSIG ①
ND	3	RMS 310 LS
		RMS 310 LSI
		RMS 310 LSG ①
		RMS 310 LSIG ①
RD	3	RMS 310 LS
		RMS 310 LSI
		RMS 310 LSG
		RMS 310 LSIG
		RMS 510 LS ②
		RMS 610 LS ②
		RMS 810 LS ②
		RMS 910 LS ②

Notes

① Ground fault application not available with NEMA 7/9. Contact Eaton's Customer Support Center.

② Add to the appropriate RD RMS 310 adder.

Raintight Hubs

All rainproof enclosures 30–400A are shipped with plate over cutout. Hubs are not supplied with screws on 30–400A enclosures. Use screws from plate.

Raintight Hubs

Raintight Tubs

Hubs	Hub Diameter Inches	Hub Diameter mm	Catalog Number
Small			
For use with RGDN and RFDN	0.75	19.1	**DS075H1**
	1.00	25.4	**DS100H1**
	1.25	31.8	**DS125H1**
	1.50	38.1	**DS150H1**
	2.00	50.8	**DS200H1**
Large			
For use with RJDN. RKDN has two cutouts	2.00	50.8	**DS200H2**
	2.50	63.5	**DS250H2**
	3.00	76.2	**DS300H2**
Required if using small DS hubs on RJDN and RKDN enclosures.			**DS900AP**

Breather and Drain, Hazardous Enclosures

A Universal Breather/Drain Fitting is installed in the top of an enclosure to provide ventilation to minimize condensation and in the bottom to allow drainage of accumulated condensation while maintaining explosion-proof integrity.

Type	Compliance NEMA 7	NEMA 9	Conduit Opening	Catalog Number
BD	Class I, Groups C, D; Class I, Zone 1, Group IIB	Class II, Groups F, G	1/2	**XPBD2**
DBB	Class I, Groups B, C, D; Class I, Zone 1, Group IIB + Hydrogen	Class II, Groups E, F, G	1/2	**XPDBB50**

Neutral Kits, Insulated and Groundable

Maximum Enclosure Rating (A)		Main Lug Size Cu/Al	Catalog Number
100	SFDN100 RFDN100	(1) 14–1/0	**DH100NK**
100	(all others)	(1) 14–1/0	**INK100**
250		(1) 4–350 kcmil	**INK250**
400		(1) 4–600 kcmil or (2) 1/0–250 kcmil	**INK400**
600		(2) 250–500 kcmil	**INK600**
1200		(4) 3/0–750 kcmil	**DS800NK** ①

Note

① For use with 800 A and 1200 A M and N frame, and 100% rated.

Modifications

Allowable accessory combinations can be reviewed in Eaton's Circuit Breaker Product Guide: PG.74.A.01.T.E. Verify final application with the Customer Support Center.

Special RD Modifications and Accessories

Description
1600A neutral assembly (aluminum)
2000A neutral assembly (aluminum)
2500A neutral assembly (aluminum)
1600A neutral assembly (copper)
2000A neutral assembly (copper)
2500A neutral assembly (copper)
Adjustable rating plug
Lockoff, padlockable
Key interlock
Phase failure protection (includes shunt trip)
Zero sequence gfp (including shunt trip and test panel)
NEMA 3R flat roof
Heater package (includes cpt, heater, thermostat and disconnect)
Special sized enclosures Standard is 90-inch H x 30-inch W x 30-inch D (2286 x 762 x 762 mm)
IQ metering
Non-standard terminations

1

Flex Center

Introduction

The Safety Switch Flex Center is a special facility at the site of our Cleveland, Tennessee, plant that is dedicated to providing customized enclosed circuit breakers that meet customers' challenging applications.

The Flex Center is a solutions center that provides real value:

- A dedicated and knowledgeable engineering/manufacturing/customer service team to meet your needs
- A production facility stocked with a full arsenal of equipment to get the job done
- The industry's shortest lead-time
- Easy ordering through our distributors
- Factory-installed modifications include (but are not limited to) the following:
  - Special size enclosure
  - Special nameplates
  - Stainless steel flush cover
  - Special paint
  - Lock-on provisions
  - Neutral assemblies—factory installed
  - Equipment ground lugs—factory installed
  - Cover control (pilot lights, pushbuttons, selector switches, etc.)
  - Factory-installed G-Frame breakers
- For application, availability or pricing questions, contact the Safety Switch Flex Center at **1-888-329-9272** or FlexSwitches@eaton.com

Satellite Plants

Atlanta
7000 Highlands Parkway SE
#102
Smyrna, GA 30082
Fax (770) 433-1863
Phone (678) 309-4260

Baltimore
6671 Santa Barbara Court
Suite A
Elk Ridge, MD 21075
Fax (410) 796-7755
Phone (410) 796-7777

Chicago
959 AEC Drive
Wood Dale, IL 60191
Fax (630) 860-3569
Phone (630) 860-3500

Cleveland
5565 Venture Drive
Unit B
Parma, OH 44130
Fax (216) 433-0545
Phone (216) 433-0616

Dallas
631 Westport Pkwy
Suite 100
Grapevine, TX 76051
Fax (817) 251-6249
Phone (817) 251-6797

Denver
14101 East 33rd Place
Suite F
Aurora, CO 80011
Fax (303) 371-4175
Phone (303) 371-7844

Hartford
625 Day Hill Road
Windsor, CT 06095
Fax (860) 688-4982
Phone (860) 688-5330

Houston
10810 West Little York
Suite 100
Houston, TX 77041
Fax (713) 688-3764
Phone (713) 688-8430

Los Angeles
5590 Jurupa Street
Ontario, CA 91761
Fax (909) 390-8884
Phone (909) 390-8853

New Jersey
96 Stemmers Lane
Westampton, NJ 08060
Fax (609) 835-4777
Phone (609) 835-4230

Orlando
3827 St. Valentine Way
Orlando, FL 32811
Fax (407) 841-9135
Phone (407) 843-3863

Phoenix
921 South Park Lane
Suite 1
Tempe, AZ 85281-5119
Fax (480) 449-4223
Phone (480) 449-4222

Raleigh
2933 S. Miami Blvd.
Suite 111
Durham, NC 27703
Fax (919) 572-9751
Phone (919) 544-7074

St. Louis
12947 Gravois Road
St. Louis, MO 63127
Fax (314) 842-2552
Phone (314) 842-7797

San Francisco
20923 Cabot Boulevard
Hayward, CA 94545
Fax (510) 784-8980
Phone (510) 784-8981

Seattle
18657 72nd Avenue S.
Kent, WA 98032
Fax (425) 251-0079
Phone (425) 251-9081

Satellite Service Locations

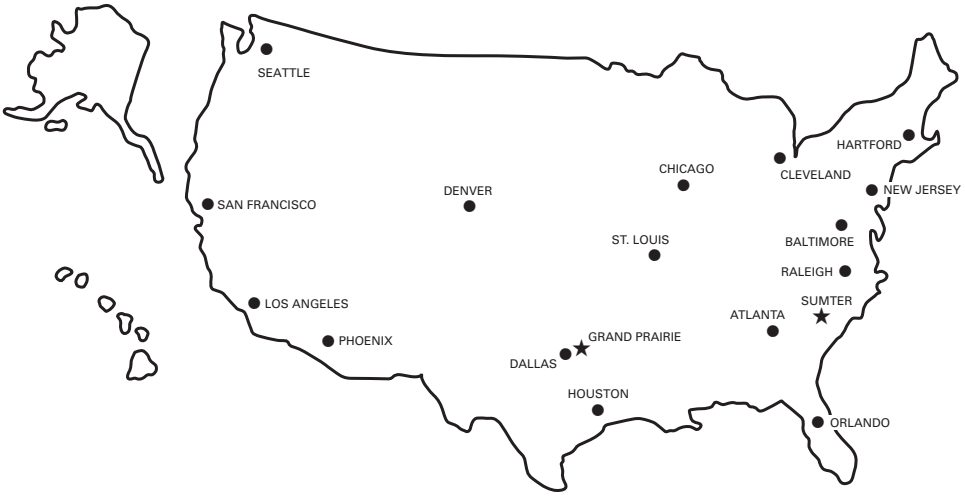

Technical Data and Specifications

Industrial Circuit Breaker Selection

Circuit Breaker Type	Continuous Ampere Rating at 40°C	Number of Poles	Vac	Vdc	Type of Trip ①	Federal Spec. W-C-375b	UL Listed Interrupting Rating rms Symmetrical Amperes Vac Ratings 120	120/240	240	277	480	600	Vdc Ratings ② 125	250	125/250
G-Frame															
GHC	15–100	1	120	125	N.I.T.U.	12c, 13a	65,000	—	—	—	—	—	14,000	—	—
GHC	15–100	2, 3	240	125/250	N.I.T.U.	13b	—	—	65,000	—	—	—	—	—	14,000
GHC	15–100	1	277	125	N.I.T.U.	12c, 13a	—	—	—	14,000	—	—	14,000	—	—
GHC	15–100	2, 3	277/480	215/250	N.I.T.U.	13b	—	—	—	14,000	14,000	—	—	—	14,000
GD	15–100	3	480	250	N.I.T.U.	13b	—	—	65,000	—	22,000	—	—	10,000	—
F-Frame															
ED	100–225	2, 3	240	125	N.I.T.U.	12b	—	—	65,000	—	—	—	10,000	—	—
EDH	100–225	2, 3	240	125	N.I.T.U.	14b	—	—	100,000	—	—	—	10,000	—	—
EDC	100–225	2, 3	240	125	N.I.T.U.	1	—	—	200,000	—	—	—	10,000	—	—
EHD	15–100	1	277	125	N.I.T.U.	13a	—	—	—	14,000	—	—	10,000	—	—
EHD	15–100	2, 3	480	250	N.I.T.U.	13b	—	—	18,000	—	14,000	—	—	10,000	—
FDB	15–150	2, 3	600	250	N.I.T.U.	18a	—	—	18,000	—	14,000	14,000	—	10,000	—
FDB	15–150	4	600	250	N.I.T.U.	③	—	—	18,000	—	14,000	14,000	—	10,000	—
FD	15–225	1	277	125	N.I.T.U.	13a	—	—	—	25,000	—	—	10,000	—	—
FD	15–225	2, 3	600	250	N.I.T.U.	22a	—	—	65,000	—	25,000	18,000	—	10,000	—
FD	15–225	4	600	250	N.I.T.U.	③	—	—	65,000	—	25,000	18,000	—	10,000	—
HFD	15–225	1	277	125	N.I.T.U.	13a	—	—	—	65,000	—	—	10,000	—	—
HFD	15–225	2, 3	600	250	N.I.T.U.	22a	—	—	100,000	—	65,000	25,000	—	20,000	—
HFD	15–225	4	600	250	N.I.T.U.	③	—	—	100,000	—	65,000	25,000	—	20,000	—
FDC	15–225 ④	2, 3	600	250	N.I.T.U.	24a	—	—	200,000	—	100,000	35,000	—	20,000	—
FDC	15–225	4	600	250	N.I.T.U.	③	—	—	200,000	—	100,000	35,000	—	20,000	—
J-Frame															
JDB	70–250	2, 3	600	250	N.I.T.U.	22a	—	—	65,000	—	35,000	18,000	—	10,000	—
JD	70–250	2, 3, 4	600	250	I.T.U.	22a	—	—	65,000	—	35,000	18,000	—	10,000	—
HJD	70–250	2, 3, 4	600	250	I.T.U.	22a	—	—	100,000	—	65,000	25,000	—	22,000	—
JDC	70–250	2, 3, 4	600	250	I.T.U.	22a	—	—	200,000	—	100,000	35,000	—	22,000	—
K-Frame															
DK	250–400	2, 3	240	250	N.I.T.U.	14b	—	—	65,000	—	—	—	—	10,000	—
KDB	100–400	2, 3	600	250	N.I.T.U.	23a	—	—	65,000	—	35,000	25,000	—	10,000	—
KD	100–400	2, 3, 4	600	250	I.T.U.	23a	—	—	65,000	—	35,000	25,000	—	10,000	—
HKD	100–400	2, 3, 4	600	250	I.T.U.	23a	—	—	100,000	—	65,000	35,000	—	22,000	—
KDC	100–400	2, 3, 4	600	250	I.T.U.	23a	—	—	200,000	—	100,000	50,000	—	22,000	—
LG-Frame															
LGE	250–600	3, 4	600	250	I.T.U.	23a	—	—	65,000	—	35,000	18,000	—	22,000	—
LGS	250–600	3, 4	600	250	I.T.U.	23a	—	—	85,000	—	50,000	25,000	—	22,000	—
LGH	250–600	3, 4	600	250	I.T.U.	23a	—	—	100,000	—	65,000	35,000	—	42,000	—

Notes

① N.I.T.U. is non-interchangeable trip unit and I.T.U. is interchangeable trip unit.
② Two-pole circuit breaker, or two poles of three-pole circuit breaker at 250 Vdc.
③ Not defined in W-C-375b.
④ Not suitable for use with 100A enclosures.

Industrial Circuit Breaker Selection, continued

Circuit Breaker Type	Continuous Ampere Rating at 40°C	Number of Poles	Vac	Vdc	Type of Trip ①	Federal Spec. W-C-375b	UL Listed Interrupting Rating rms Symmetrical Amperes Vac Ratings 120	120/240	240	277	480	600	Vdc Ratings ② 125	250	125/250
L-Frame															
LDB	300–600	2, 3	600	250	N.I.T.U.	23a	—	—	65,000	—	35,000	25,000	—	22,000	—
LD	300–600	2, 3, 4	600	250	I.T.U.	23a	—	—	65,000	—	35,000	25,000	—	22,000	—
HLD ③	300–600	2, 3, 4	600	250	I.T.U.	23a	—	—	100,000	—	65,000	35,000	—	25,000	—
M-Frame															
MDL	300–800	2, 3	600	250	I.T.U.	23a	—	—	65,000	—	50,000	25,000	—	22,000	—
HMDL ④	300–800	2, 3	600	250	I.T.U.	23a	—	—	100,000	—	65,000	35,000	—	25,000	—
N-Frame															
ND	600–1200	3, 4	600	—	N.I.T.U.	23a	—	—	65,000	—	50,000	25,000	—	—	
HND ④	600–1200	3, 4	600	—	N.I.T.U.	23a	—	—	100,000	—	65,000	35,000	—	—	
R-Frame															
RD	800–2500	3, 4	600	—	N.I.T.U.	24a	—	—	125,000	—	65,000	35,000	—	—	—

Notes

① N.I.T.U. is non-interchangeable trip unit and I.T.U. is interchangeable trip unit.

② Two-pole circuit breaker, or two poles of three-pole circuit breaker at 250 Vdc.

③ HLD: NEMA 1 enclosed: 240 Vac = 100 kA, 480 Vac = 65 kA, 600 Vac = 35 kA, 250 Vdc = 20 kA, 500 Vdc = 25 kA.
NEMA 3R enclosed: 240 Vac = 65 kA, 480 Vac = 50 kA, 600 Vac = 25 kA, 250 Vdc = 20 kA, 500 Vdc = 25 kA.

④ HMDL and HND: NEMA 1 and 3R enclosed: 240 Vac = 100 kA, 480 Vac = 65 kA, 600 Vac = 35 kA, 250 Vdc = 30 kA, 500 Vdc = 30 kA.

Dimensions

Approximate Dimensions in Inches (mm)

NEMA 1, 12, 3R

Note: Not to be used for construction purposes unless approved.

NEMA 1 Surface Mounted

Frame	Maximum Amperes	A	B	C	D	E	F	Approximate Weight in Lbs (kg)
G	100	17.50 (444.5)	8.56 (217.4)	6.28 (159.5)	13.03 (331.0)	1.20 (30.5)	17.19 (436.6)	12 (5)
F ①	100	19.13 (485.9)	9.13 (231.9) ③	5.20 (132.1)	17.00 (431.8)	N/A ④	18.81 (477.8)	13 (6)
Earth leakage	100	23.25 (590.6)	8.56 (217.4)	6.28 (159.5)	18.75 (476.3)	1.20 (30.5)	22.94 (582.7)	15 (7)
F ②	225	23.25 (590.6)	8.56 (217.4)	6.28 (159.5)	18.75 (476.3)	1.20 (30.5)	22.94 (582.7)	15 (7)
J	250	34.70 (881.4)	10.92 (277.4)	7.20 (182.9)	30.00 (762.0)	1.88 (47.8)	34.39 (873.5)	31 (14)
K ⑤	400	38.81 (985.8)	11.06 (280.9)	10.94 (277.9)	34.00 (863.6)	1.25 (31.8)	38.50 (977.9)	53 (24)
LG	600	51.06 (1296.9)	21.87 (555.5)	9.96 (253.0)	51.63 (1311.5)	1.94 (49.3)	50.13 (1273.3)	90 (41)
Earth leakage	600	51.06 (1296.9)	21.87 (555.5)	9.96 (253.0)	51.63 (1311.5)	1.94 (49.3)	50.13 (1273.3)	90 (41)
L	600	45.88 (1165.4)	14.31 (363.5)	12.38 (314.5)	46.56 (1182.6)	1.91 (48.5)	45.56 (1157.2)	81 (37)
M, N	1200	61.22 (1555.0)	21.44 (544.6)	15.41 (391.4)	61.84 (1570.7)	1.97 (50.0)	60.91 (1547.1)	178 (81)
M, N ⑥	400–1200	67.82 (1722.6)	21.41 (543.8)	15.53 (394.5)	69.32 (1760.7)	1.97 (50.0)	68.69 (1744.7)	128 (58)

NEMA 1 Surface Mounted

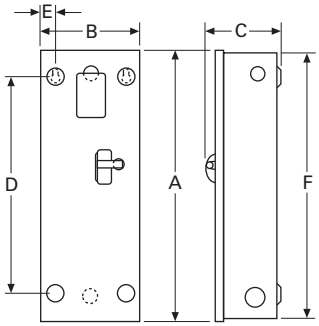

Notes

① SFDN100 Series "B" released 9/15/01.
② Maximum wire size: 4/0.
③ Total width, including door clip is 9.95 inches (253 mm).
④ Single centered mounting hole provided.
⑤ Maximum wire size: 500 kcmil.
⑥ 100% rated breakers.

Approximate Dimensions in Inches (mm)

NEMA 1 Flush Mounted

Frame	Maximum Amperes	A	B	C	D	E	F	Approximate Weight in Lbs (kg)
F	100	18.81 (477.8)	9.72 (246.9)	6.28 (159.5)	13.03 (331.0)	1.86 (47.2)	18.50 (469.9)	12 (5)
Earth leakage	100	24.56 (623.8)	9.72 (246.9)	6.28 (159.5)	18.75 (476.3)	1.86 (47.2)	24.25 (616.0)	15 (7)
F ①	225	24.56 (623.8)	9.72 (246.9)	6.28 (159.5)	18.75 (476.3)	1.86 (47.2)	24.25 (616.0)	15 (7)
J	250	36.02 (914.9)	12.23 (310.6)	7.20 (182.9)	30.00 (762.0)	1.88 (47.8)	35.70 (906.8)	32 (15)
K ②	400	40.13 (1019.3)	12.38 (314.5)	10.94 (277.9)	34.00 (863.6)	2.94 (74.7)	39.81 (1011.2)	53 (24)

NEMA 1 Flush Mounted

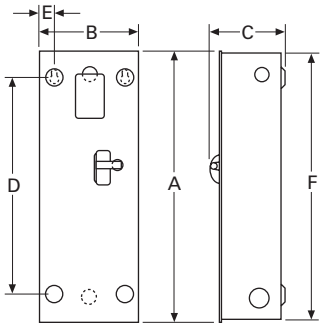

NEMA 1 Surface Mounted SFDN100 Series "B"

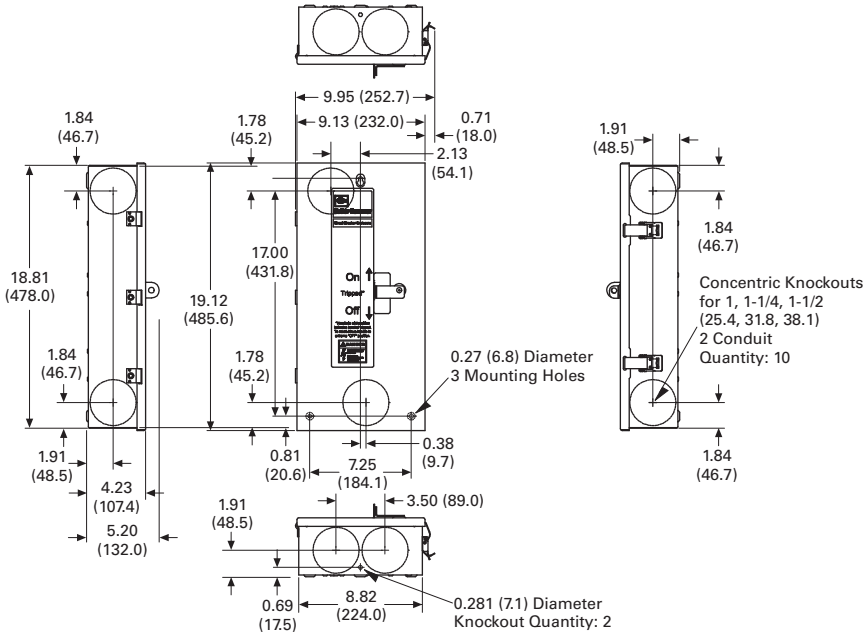

Notes

① Maximum wire size: 4/0.

② Maximum wire size: 500 kcmil.

Approximate Dimensions in Inches (mm)

NEMA 12 Dustproof

Frame	Maximum Amperes	A	B	C	D	E	Approximate Weight in Lbs (kg)
G, F	100	19.91 (505.7)	9.16 (232.7)	9.31 (236.5)	18.53 (470.7)	1.70 (43.2)	16 (7)
Earth leakage	100	19.91 (505.7)	9.16 (232.7)	9.31 (236.5)	18.53 (470.7)	1.70 (43.2)	19 (9)
FBP, FCL	100	25.66 (651.8)	9.16 (232.7)	9.31 (236.5)	24.28 (616.7)	1.70 (43.2)	19 (9)
F ①	225	25.66 (651.8)	9.16 (232.7)	9.31 (236.5)	24.28 (616.7)	1.70 (43.2)	19 (9)
J	250	37.53 (953.3)	11.88 (301.8)	10.22 (259.6)	35.77 (908.6)	1.94 (49.3)	37 (17)
K ②	400	41.69 (1058.9)	12.31 (312.7)	14.06 (357.1)	39.94 (1014.5)	1.97 (50.0)	58 (26)
LG	600	53.37 (1355.6)	23.06 (585.7)	14.10 (358.1)	51.63 (1311.4)	1.94 (49.3)	94 (43)
Earth leakage	600	53.37 (1355.6)	23.06 (585.7)	14.10 (358.1)	51.63 (1311.4)	1.94 (49.3)	94 (43)
L	600	48.31 (1227.1)	15.56 (395.2)	15.50 (393.7)	46.56 (1182.6)	1.92 (48.8)	84 (38)
NBP	800	63.59 (1615.2)	22.63 (574.8)	17.63 (447.8)	—	—	110 (50)
M, N	1200	63.59 (1615.2)	22.63 (574.8)	17.63 (447.8)	61.84 (1570.7)	1.97 (50.0)	175 (80)
G, F	100	19.91 (505.7)	9.16 (232.7)	9.31 (236.5)	—	—	16 (7)
Earth leakage	100	19.91 (505.7)	9.16 (232.7)	9.31 (236.5)	—	—	19 (9)
FBP, FCL	100	25.66 (651.8)	9.16 (232.7)	9.31 (236.5)	—	—	19 (9)
F ①	225	25.66 (651.8)	9.16 (232.7)	9.31 (236.5)	—	—	19 (9)
J	250	37.53 (953.3)	11.88 (301.8)	10.22 (259.6)	—	—	37 (17)
K ②	400	41.69 (1058.9)	12.31 (312.7)	14.06 (357.1)	—	—	58 (26)

NEMA 12 Dustproof

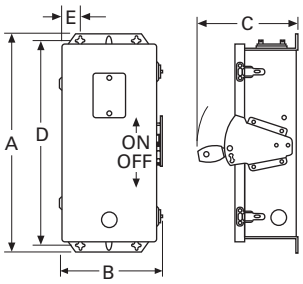

Notes

① Maximum wire size: 4/0.

② Maximum wire size: 500 kcmil.

Approximate Dimensions in Inches (mm)

NEMA 3R Rainproof

Frame	Maximum Amperes	A	B	C	D	E	Approximate Weight in Lbs (kg)
G, F ①	100	19.91 (505.7)	9.16 (232.7)	9.31 (236.5)	18.53 (470.7)	1.70 (43.2) ②	16 (7)
Earth leakage	100	19.91 (505.7)	9.19 (232.7)	9.31 (236.5)	18.53 (470.7)	1.70 (43.2)	19 (9)
FBP, FCL	100	25.66 (651.8)	9.16 (232.7)	9.31 (236.5)	24.28 (616.7)	1.70 (43.2)	19 (9)
F ③	225	25.66 (651.8)	9.16 (232.7)	9.31 (236.5)	24.28 (616.7)	1.70 (43.2)	19 (9)
J	250	37.50 (952.5)	11.88 (301.8)	10.22 (259.6)	35.77 (908.6)	1.94 (49.3)	37 (17)
K ④	400	41.69 (1058.9)	12.31 (312.7)	14.06 (357.1)	39.94 (1014.5)	1.97 (50.0)	58 (26)
LG	600	53.37 (1355.6)	23.06 (585.7)	14.10 (358.1)	51.63 (1311.4)	1.94 (49.3)	94 (43)
Earth leakage	600	53.37 (1355.6)	23.06 (585.7)	14.10 (358.1)	51.63 (1311.4)	1.94 (49.3)	94 (43)
L	600	48.31 (1227.1)	15.56 (395.2)	15.50 (393.7)	46.56 (1182.6)	1.92 (48.8)	84 (38)
M, N	1200	63.59 (1615.2)	22.63 (574.8)	17.63 (447.8)	61.84 (1570.7)	1.97 (50.0)	175 (80)
M, N ⑤	400–1200	71.06 (1804.9)	32.40 (823.0)	17.65 (448.3)	69.32 (1760.7)	8.04 (204.2)	214 (97)

NEMA 3R Rainproof ⑥

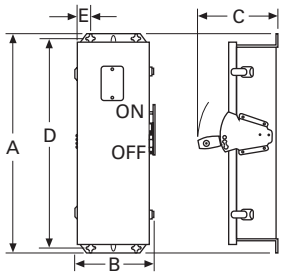

Catalog Number RCNDN1200

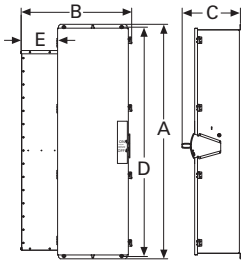

NEMA 3R Rainproof RFDN100 Series "B"

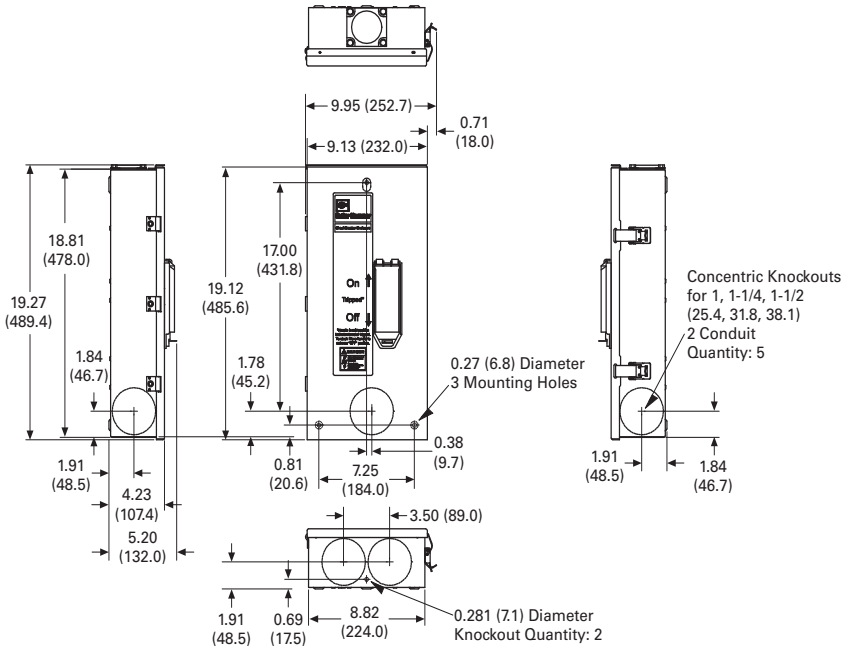

Notes

① RFDN100 Series "B" released 9/15/01.
② Single centered mounting hole provided on RFDN100, Series "B."
③ Maximum wire size: 4/0.
④ Maximum wire size: 500 kcmil.
⑤ 100% rated breakers.
⑥ All NEMA 3R except RFDN100.

Approximate Dimensions in Inches (mm)

NEMA 4/4X, 5, 7/9

Note: Not to be used for construction purposes unless approved.

NEMA 4/4X, 5 Stainless Steel

Frame	Maximum Amperes	A	B	C	D	E	Approximate Weight in Lbs (kg)
G, F	100	19.91 (505.7)	8.84 (224.5)	9.31 (236.5)	18.53 (470.7)	1.70 (43.2)	16 (7)
Earth leakage	100	19.91 (505.7)	8.84 (224.5)	9.31 (236.5)	18.53 (470.7)	1.70 (43.2)	20 (9)
FBP, FCL	100	25.66 (651.8)	8.84 (224.5)	9.31 (236.5)	24.28 (616.7)	1.70 (43.2)	20 (9)
F ①	225	25.66 (651.8)	8.84 (224.5)	9.31 (236.5)	24.28 (616.7)	1.70 (43.2)	20 (9)
J	250	37.50 (952.5)	11.56 (293.6)	10.22 (259.6)	35.77 (908.6)	1.94 (49.3)	39 (18)
K ②	400	41.69 (1058.9)	11.75 (298.5)	14.06 (357.1)	39.94 (1014.5)	1.97 (50.0)	60 (27)
LG	600	53.38 (1355.9)	23.06 (585.7)	14.11 (358.4)	51.64 (1311.7)	1.94 (49.3)	96 (44)
Earth leakage	600	53.38 (1355.9)	23.06 (585.7)	14.11 (358.4)	51.64 (1311.7)	1.94 (49.3)	96 (44)
L	600	48.31 (1227.1)	14.91 (378.7)	15.50 (393.7)	46.56 (1182.6)	1.92 (48.8)	88 (40)
M, N	1200	63.59 (1615.2)	22.00 (558.8)	17.63 (447.8)	61.84 (1570.7)	1.97 (50.0)	185 (84)

NEMA 4/4X, 5 Stainless Steel

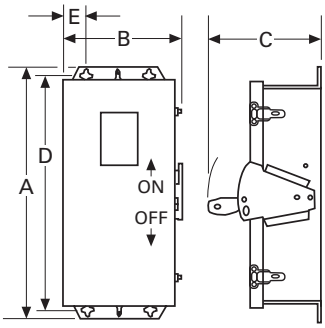

Notes

① Maximum wire size: 4/0.

② Maximum wire size: 500 kcmil.

Approximate Dimensions in Inches (mm)

NEMA 7/9 Cast Aluminum with Weather-Resistant Seals—15–250A

Breaker Frame	Breaker Size Amperes	Number of Outlets	Mounting ① A	B	J	Inside ① C	D	E	Outside ① F	G	H	K ① Dim	Standard Conduit Size ①	Approximate Weight in Lbs (kg)
F XFDN050B	15–50	4	5.50 (139.7)	13.13 (333.5)	14.13 (358.9)	6.13 (155.7)	10.75 (273.1)	5.25 (133.4)	10.63 (270.0)	15.25 (387.4)	8.88 (225.6)	2.00 (50.8)	1.50 (38.1)	38 (17)
F ① XFDN100B	60–100	4	6.00 (152.4)	18.00 (457.2)	19.00 (482.6)	6.50 (165.1)	16.00 (406.4)	5.50 (139.7)	11.00 (279.4)	20.50 (520.7)	9.00 (228.6)	2.31 (58.7)	2.00 (50.8)	57 (26)
F ① XFDN225B	125–225	4	10.25 (260.4)	22.63 (574.8)	—	11.38 (289.1)	20.00 (508.0)	6.38 (162.1)	16.38 (416.1)	25.13 (638.3)	9.63 (244.6)	3.50 (88.9)	2.50 (63.5)	104 (47)
J XJDN225B	70–225	4	8.50 (215.9)	27.13 (689.1)	—	11.25 (285.8)	29.88 (759.0)	7.38 (187.5)	16.00 (406.4)	29.50 (749.3)	12.31 (312.7)	4.00 (101.6)	3.00 (76.2)	145 (66)
J XJDN250B	250	4	9.50 (241.3)	27.25 (692.2)	—	11.25 (285.8)	29.88 (759.0)	8.06 (204.7)	16.38 (416.1)	35.00 (889.0)	12.38 (314.5)	4.19 (106.4)	4.00 (101.6)	170 (77)

NEMA 7/9 Cast Aluminum with Weather-Resistant Seals—Dual Three- and Four-Point Mounting Available as Standard on F-Frame 100A and Below

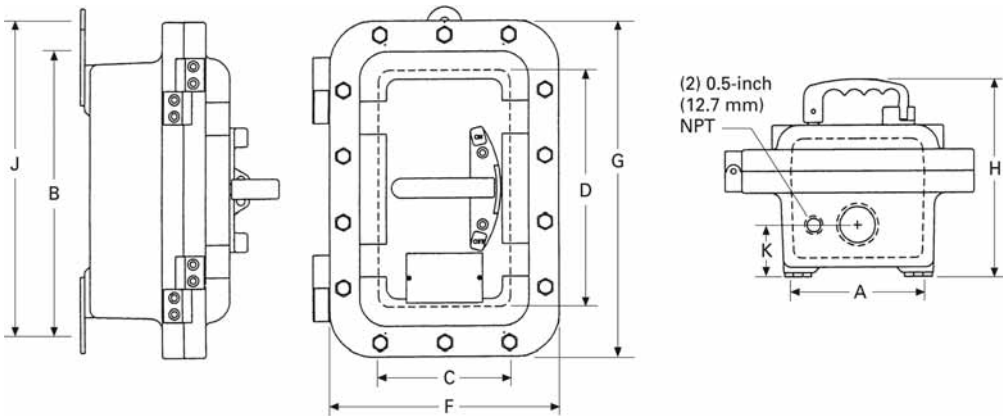

Note

① Maximum wire size: 4/0.

Approximate Dimensions in Inches (mm)

7/9 Cast Aluminum with Weather-Resistant Seals—400–1200A

Breaker Frame	Breaker Size Amperes	Overall Enclosure A	B	C	D	Enclosure Mounting E	F	G	Conduit H	I	Hinged Cover J	Standard Conduit Size	Location	Weight Lbs (kg)
K ① XKDN400B	400	35.00 (889.0)	16.38 (416.1)	12.63 (320.8)	7.13 (181.1)	9.50 (241.3)	27.25 (692.2)	.50 (12.7)	3.00 (76.2)	4.19 (106.4)	5.50 (139.7)	4.00 (101.6)	1, 3 and 6, 8	170 (77)
L XLDN600B	600	37.88 (962.2)	23.88 (606.6)	14.25 (362.0)	8.25 (209.6)	16.00 (406.4)	45.38 (1152.7)	.50 (12.7)	4.00 (101.6)	5.00 (127.0)	6.00 (152.4)	4.00 (101.6)	1, 3 and 6, 8	419 (190)
M XMCN800B	800	47.88 (1216.2)	13.63 (346.2)	12.81 (325.4)	6.81 (173.0)	16.13 (409.7)	40.75 (1035.1)	.50 (12.7)	4.00 (101.6)	4.00 (101.6)	6.00 (152.4)	4.00 (101.6)	1, 3 and 6, 8	228 (104)
N ② XNDN1200B	1200	64.00 (1625.6)	26.00 (660.4)	21.38 (543.1)	14.38 (365.3)	27.56 (700.0)	38.63 (981.2)	.50 (12.7)	6.50 (165.1)	4.38 (111.3)	7.00 (177.8)	4.00 (101.6)	1, 3 and 6, 8	567 (257)

NEMA 7/9 Cast Aluminum with Weather-Resistant Seals

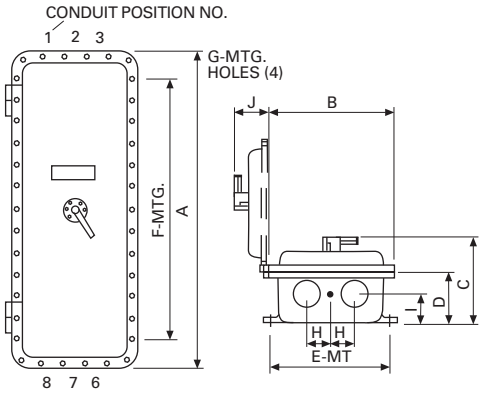

Conduit Openings

Refer to outline dimensions for size and location of standard conduit openings. In addition, 1/2-inch (12.7 mm) openings are drilled and tapped for breather and drain. Unless ordered with breather and drain, these openings are plugged. Refer to Eaton for price of breather and drain.

Notes

① Maximum wire size: 500 kcmil.

② Power cables must enter and leave from opposite ends (through-feed).

Enclosed Rotary Disconnects

Contents

Description	*Page*
Product Overview	**V2-T1-122**
Features, Benefits and Functions	**V2-T1-122**
Standards and Certifications	**V2-T1-122**
Product Selection	**V2-T1-123**
Dimensions	**V2-T1-124**

Product Overview

Provide users with the ability to lock directly wired motor loads in the OFF position to comply with OSHA lockout/tagout regulations. Also for machine applications that require compact, economical disconnect switches.

Enclosed rotary disconnect switches allow safe control and safe disconnect of any motor application.

Features, Benefits and Functions

- Padlockable in the OFF position (up to three padlocks) to meet OSHA lockout requirements
- Available in 16–80A ratings
- 600 Vac, three- and four-pole non-fusible device
- Rated for making and breaking loads
- Accepts auxiliary contacts; capability to signal PLC controllers
- Ground lug connection provided
- Possibility of adding one power pole and one auxiliary contact
- NEMA® Type 1, 3R, 12, 4, 4X

Open rotary disconnects can be found in Volume 5, Tab 3 titled: NEMA Manual Starters.

Standards and Certifications

- Meets NEC® Article 430 requirements for a separate disconnect means within sight of all motor loads
- UL® listed under Section 508
- UL listed File No. E165150
- CSA® listed under 22.2 No. 14, File 162136

Listed

Product Selection

Enclosed Rotary Non-Fusible

Ampere Rating	Maximum Horsepower Ratings Three-Phase AC 208V	240V	480V	600V	NEMA 1 ① Enclosure Indoor Catalog Number	NEMA 12 ①② Enclosure Dust-Tight/ Rainproof Catalog Number	NEMA 4X ① Enclosure Corrosion-Resistant, Stainless Steel Catalog Number	NEMA 4X ① Enclosure Corrosion-Resistant, Non-Metallic Catalog Number	NEMA 4X Enclosure Polycarbonate-Non-Metallic Catalog Number
Three-Pole, 600 Vac									
16	3	5	10	10	**ER53016UG**	**ER53016UD**	**ER53016UW**	**ER53016UX**	—
25	7-1/2	7-1/2	15	20	**ER53025UG**	**ER53025UD**	**ER53025UW**	**ER53025UX**	—
30	7-1/2	7-1/2	15	20	**ER53030UG**	**ER53030UD**	**ER53030UW**	**ER53030UX**	**ER53030UPGB** ③④
40	7-1/2	7-1/2	20	25	**ER53040UG**	**ER53040UD**	**ER53040UW**	**ER53040UX**	—
60	15	15	30	30	**ER53060UG**	**ER53060UD**	**ER53060UW**	**ER53060UX**	**ER53060UPGB** ③④
80	15	20	40	40	**ER53080UG**	**ER53080UD**	**ER53080UW**	**ER53080UX**	—
Four-Pole, 600 Vac									
16	3	5	10	10	**ER54016UG**	**ER54016UD**	**ER54016UW**	**ER54016UX**	—
25	7-1/2	7-1/2	15	20	**ER54025UG**	**ER54025UD**	**ER54025UW**	**ER54025UX**	—
30	7-1/2	7-1/2	20	25	**ER54030UG**	**ER54030UD**	**ER54030UW**	**ER54030UX**	—
40	7-1/2	7-1/2	20	25	**ER54040UG**	**ER54040UD**	**ER54040UW**	**ER54040UX**	—

Accessories for Enclosed Rotary Disconnects ⑤⑥

Disconnect Ampere Rating	Switched Fourth Pole	Unswitched Neutral Pole	Auxiliary Contacts (Choose one)	Terminal Shrouds
16	**S4PR516**	**UNMR5A**	1NO + 1NC **AC1NONC**	Single-pole **TS1R5A**
25	**S4PR525**			
30	**S4PR530**		2NC **AC2NC**	Three-pole **TS3R5A**
40	**S4PR540**			
60	**S4PR560**	**UNMR5B**		Single-pole **TS1R5B**
80	**S4PR580**			Three-pole **TS3R5B**

Notes

① For CSA listed switches, add prefix letter "C" to the front of the catalog number.
② NEMA Type 12 enclosures (16–80A) can be field modified to meet NEMA Type 3R rainproof requirements when a factory-provided drain hole is opened.
③ GB suffix = Gray cover, Black handle. GR suffix = Gray cover, Red handle. YR suffix = Yellow cover, Red handle.
④ cULus only.
⑤ Ordered and shipped as separate components—not integral to enclosed device.
⑥ Enclosed disconnects can accept one power pole, neutral or up to two auxiliary contacts (one mounted on either side of switch).

Contact the Safety Switch Flex Center (**1-888-329-9272** or FlexSwitches@eaton.com) for factory-installed accessories or other special modifications.

1

Dimensions

Approximate Dimensions in Inches (mm)

NEMA Type 1 (16–40A)

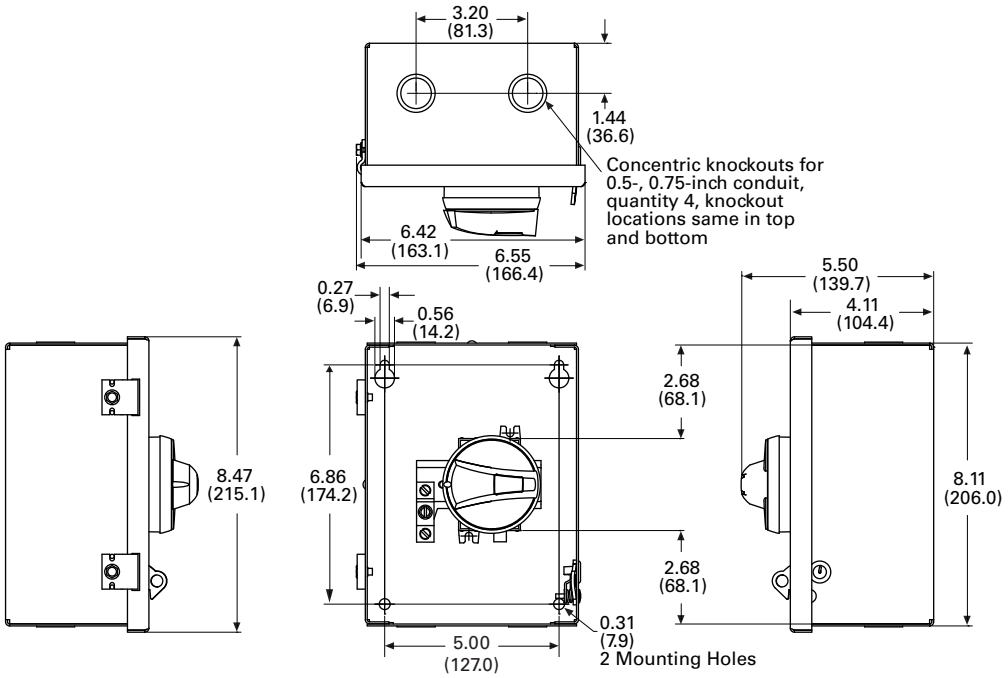

Note:
Wire range of switch lugs for 16–25A is #6–#10 copper, and for 30–40A is #8–#14.
Wire range of ground lugs is #2–#14 copper or aluminum.

NEMA Type 1 (60–80A)

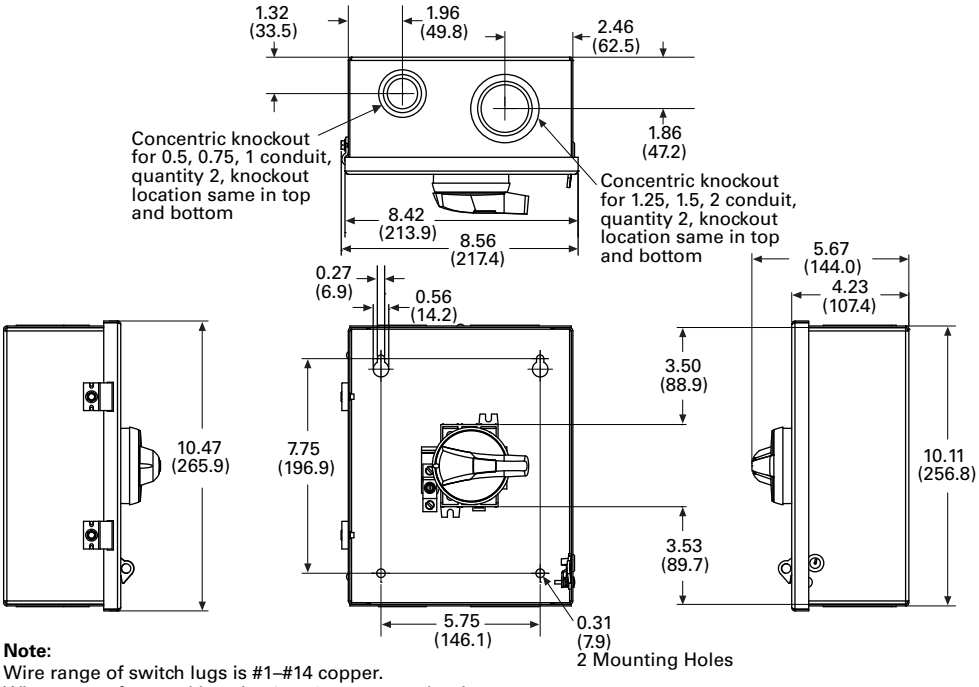

Note:
Wire range of switch lugs is #1–#14 copper.
Wire range of ground lugs is #2–#14 copper or aluminum.

Approximate Dimensions in Inches (mm)

NEMA Type 12/3R (16–40A)

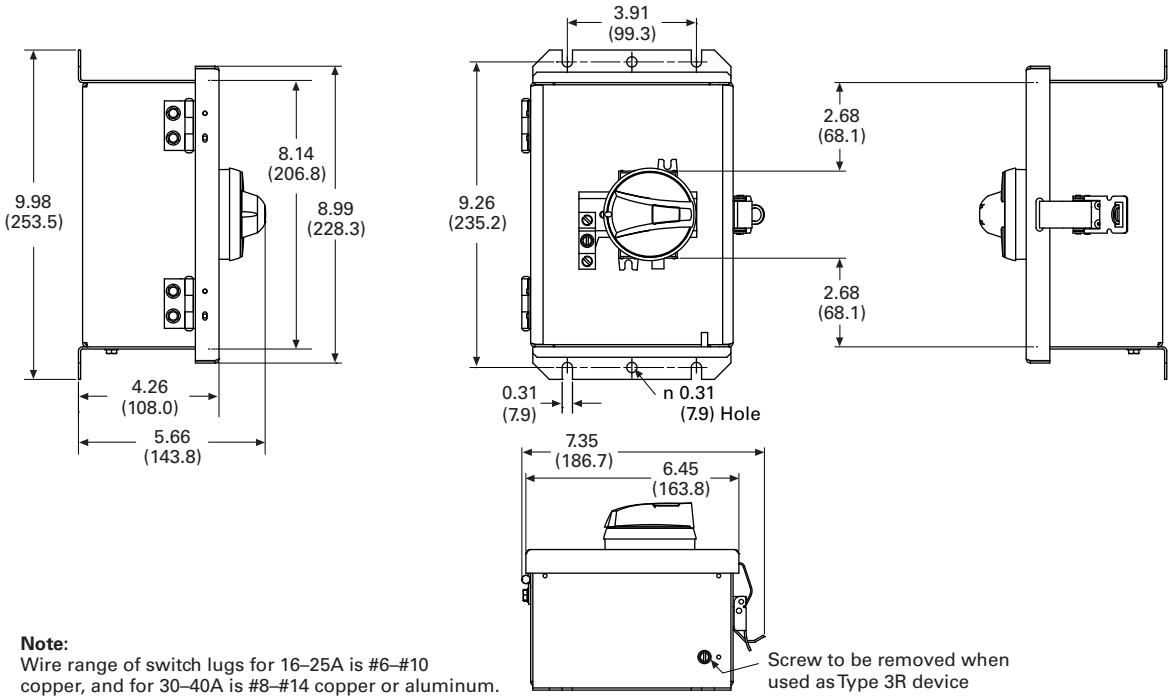

Note:
Wire range of switch lugs for 16–25A is #6–#10 copper, and for 30–40A is #8–#14 copper or aluminum.

NEMA Type 12/3R (60–80A)

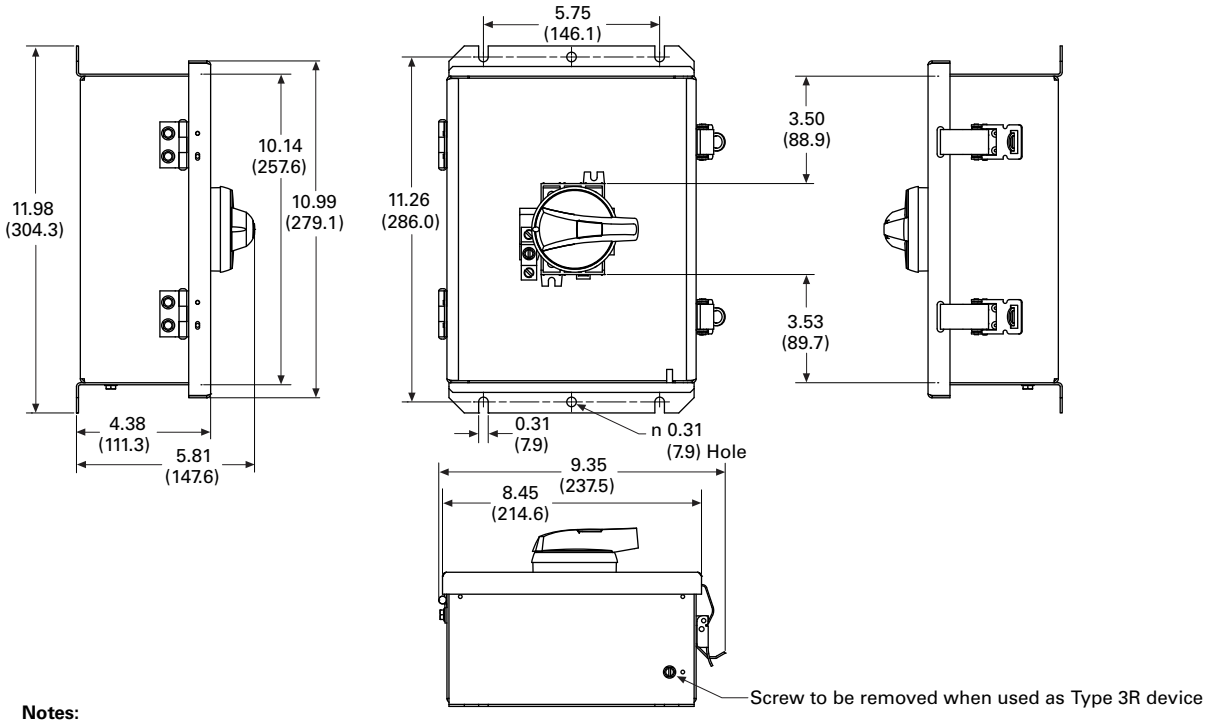

Notes:
Wire range of switch lugs is #1–#14 copper.
Wire range of ground lugs is #2–#14 copper or aluminum.

1

Approximate Dimensions in Inches (mm)

NEMA Type 4X Stainless (16–40A)

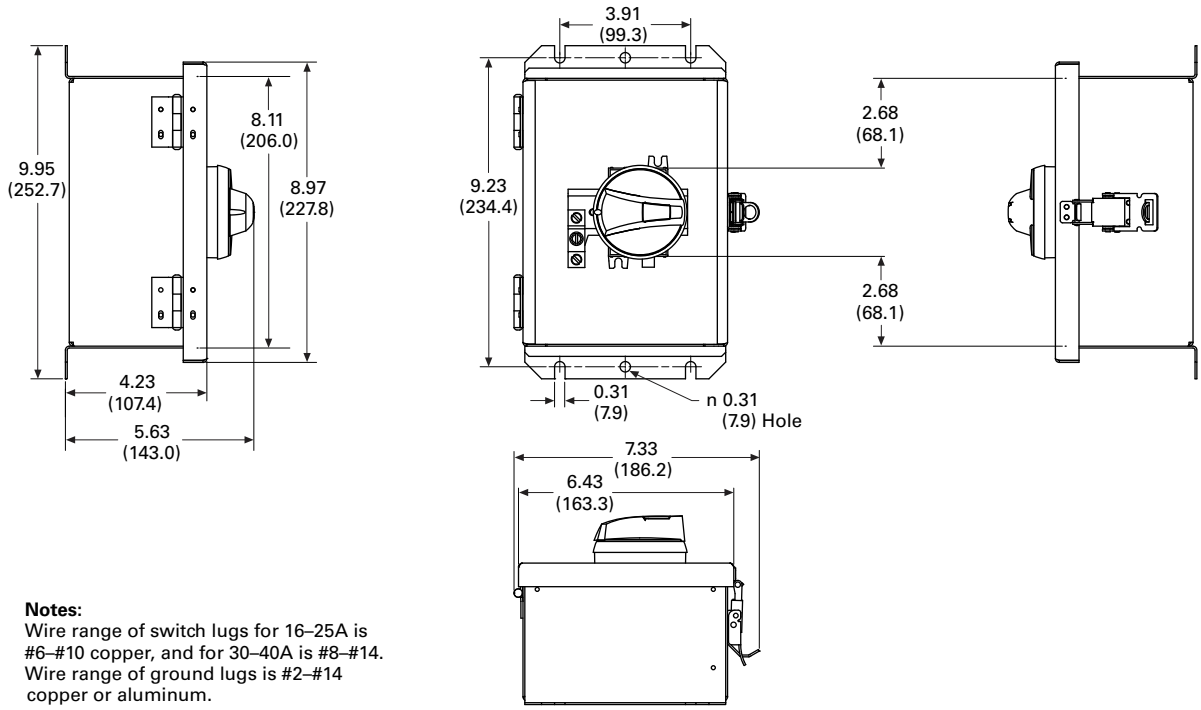

Notes:
Wire range of switch lugs for 16–25A is #6–#10 copper, and for 30–40A is #8–#14. Wire range of ground lugs is #2–#14 copper or aluminum.

NEMA Type 4X Stainless (60–80A)

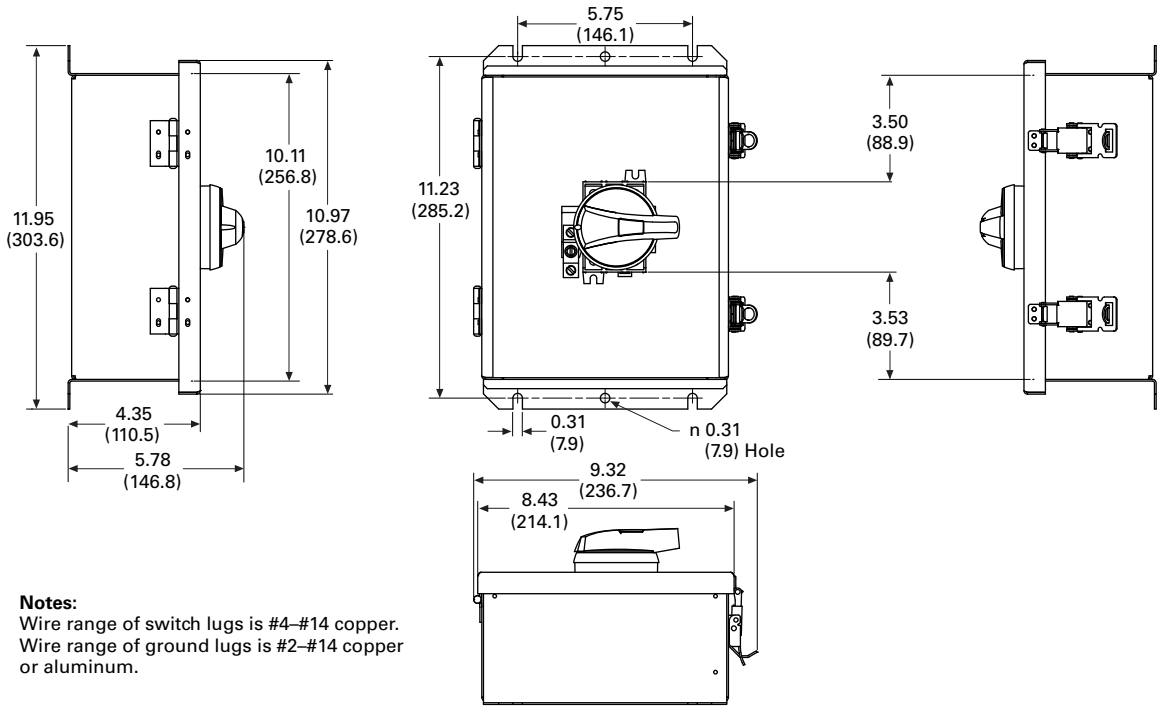

Notes:
Wire range of switch lugs is #4–#14 copper. Wire range of ground lugs is #2–#14 copper or aluminum.

Approximate Dimensions in Inches (mm)

NEMA Type 4X Thermoset Polyester (16–40A)

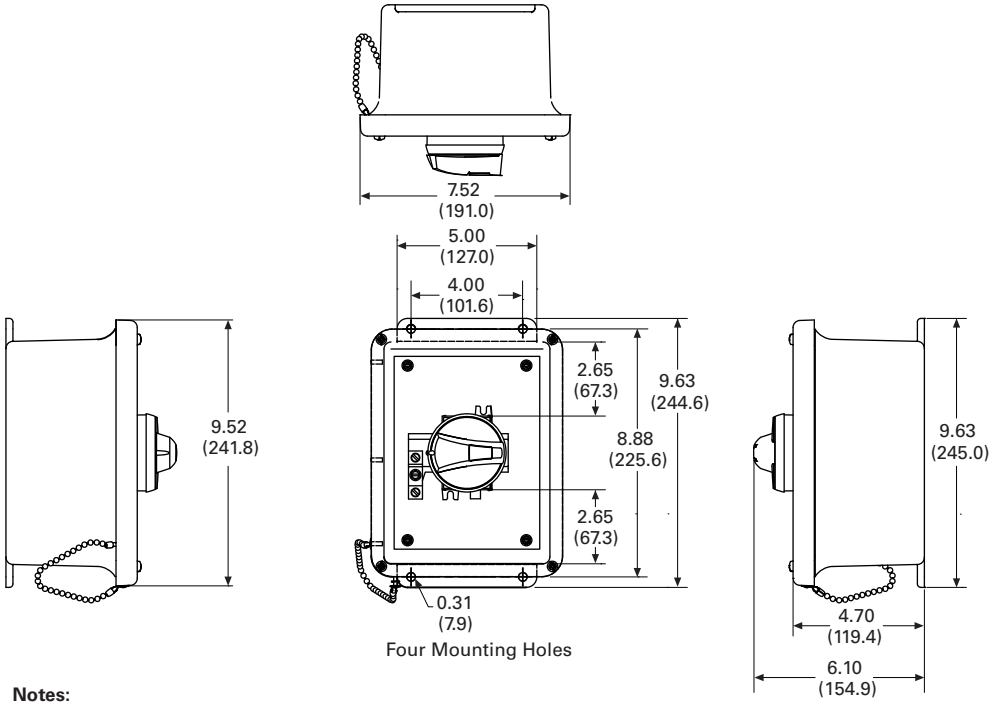

Notes:
Wire range of switch lugs for 16–25A is #6–#10 copper, and for 30–40A is #8–#14.
Wire range of ground lugs is #2–#14 copper or aluminum.

NEMA Type 4X Thermoset Polyester (60–80A)

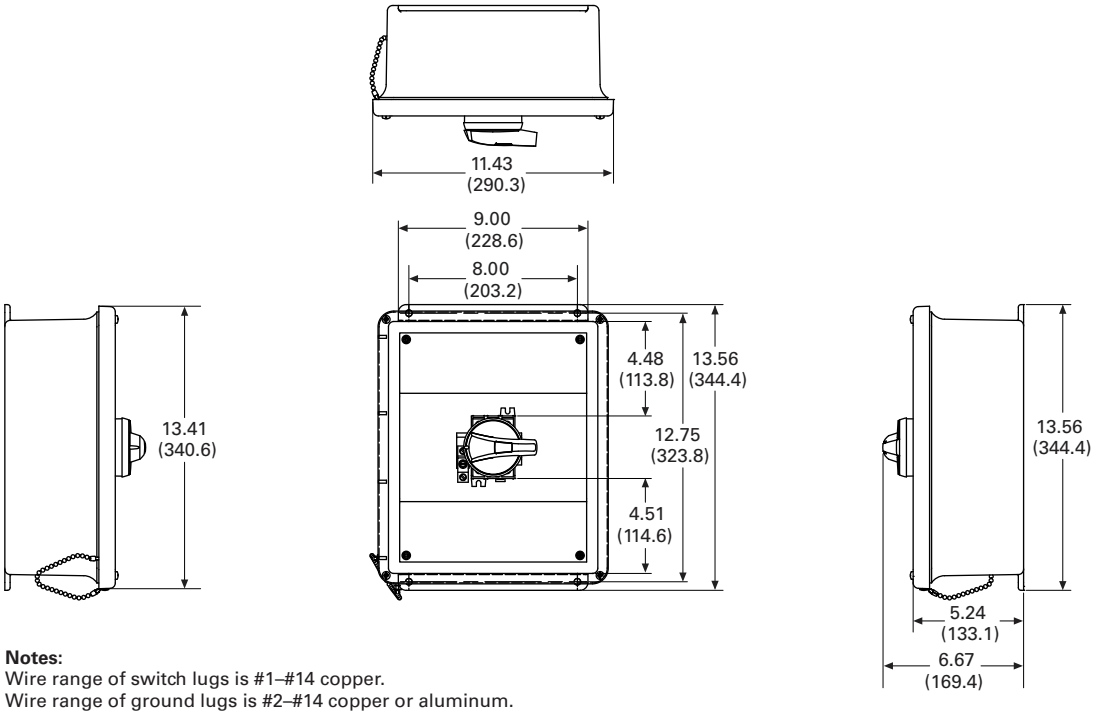

Notes:
Wire range of switch lugs is #1–#14 copper.
Wire range of ground lugs is #2–#14 copper or aluminum.

1

Approximate Dimensions in Inches (mm)

NEMA Type 4X—Polycarbonate (30A)

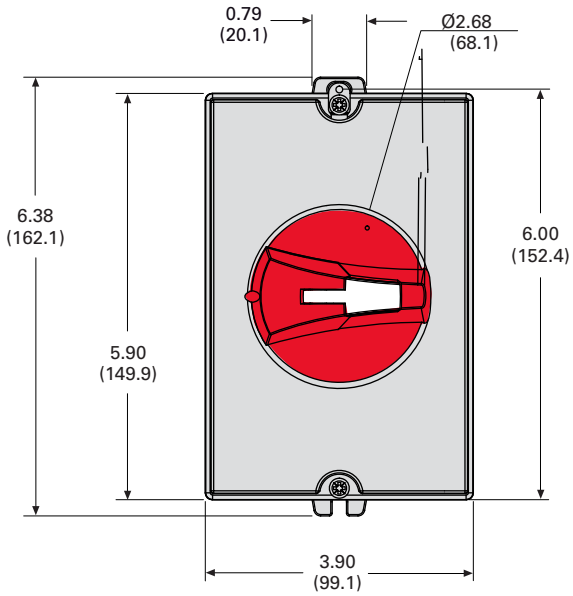

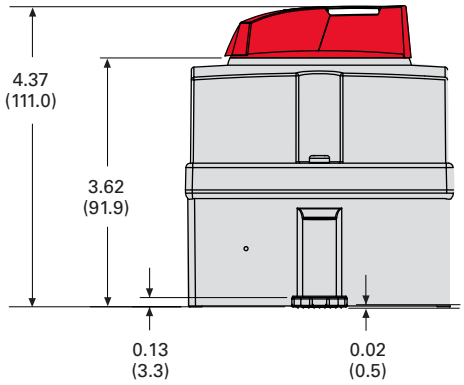

NEMA Type 4X—Polycarbonate (60A)

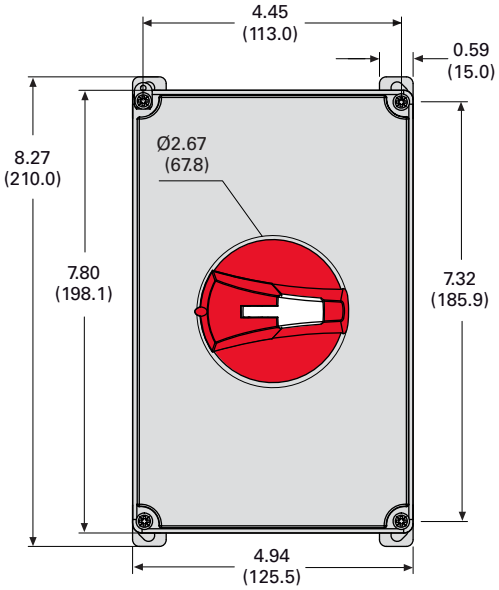

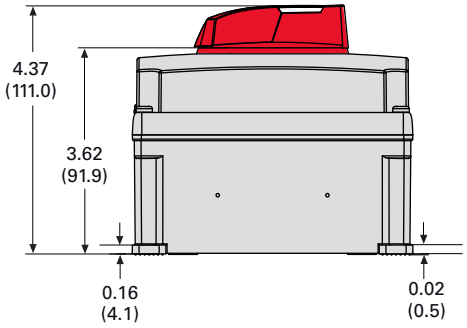

Dry-Type Transformer Family

2.1 NEMA TP-1 Energy-Efficient Transformers

Product Description V2-T2-2
Application Description V2-T2-2
Features, Benefits and Functions V2-T2-3
Standards and Certifications V2-T2-3
Catalog Number Selection V2-T2-4
Product Selection V2-T2-4
Accessories V2-T2-50
Technical Data and Specifications V2-T2-50

2.2 NEMA Premium and E3 Super Efficient Transformers

NEMA Premium® Efficient Transformers V2-T2-61
E3 Super Efficient Transformers V2-T2-66

2.3 Energy-Efficient Harmonic Mitigating Transformers

Product Description V2-T2-71
Features and Benefits V2-T2-71
Standards and Certifications V2-T2-72
Catalog Number Selection V2-T2-72
Product Selection V2-T2-73
Accessories V2-T2-89
Technical Data and Specifications V2-T2-89

2.4 General-Purpose Encapsulated Transformers

Product Description V2-T2-93
Application Description V2-T2-93
Features, Benefits and Functions V2-T2-93
Standards and Certifications V2-T2-93
Catalog Number Selection V2-T2-94
Product Selection V2-T2-94
Accessories V2-T2-109
Technical Data and Specifications V2-T2-109

2.5 Distribution Transformers

Motor Drive Isolation Transformers V2-T2-111
Mini–Power Centers V2-T2-119
Totally Enclosed Non-Ventilated Transformers V2-T2-124
Class I, Division 2, Hazardous Location Transformers V2-T2-127
Open-Type Core and Coil Assembly Transformers V2-T2-130
Marine Duty Transformers V2-T2-133
Buck-Boost and Low Voltage Lighting Transformers V2-T2-144
Medium Voltage Distribution Transformers V2-T2-173

2.6 Transformer Standards, Technical Data and Accessories

Standards and Certifications V2-T2-186
Catalog Number Selection V2-T2-187
Product Selection V2-T2-189
Options and Accessories V2-T2-191
Technical Data and Specifications V2-T2-195
Glossary of Transformer Terms V2-T2-211
Frequently Asked Questions About Transformers V2-T2-214

2.7 Dimensions

Dimensions V2-T2-216

Type DT-3

Contents

Description	*Page*
NEMA TP-1 Energy-Efficient Transformers	
Features, Benefits and Functions	**V2-T2-3**
Standards and Certifications	**V2-T2-3**
Catalog Number Selection	**V2-T2-4**
Product Selection	**V2-T2-4**
Single-Phase Aluminum	**V2-T2-4**
Single-Phase Copper	**V2-T2-6**
Single-Phase Shielded Aluminum	**V2-T2-8**
Single-Phase Shielded Copper	**V2-T2-10**
Three-Phase Aluminum	**V2-T2-12**
Three-Phase Copper	**V2-T2-23**
Three-Phase Shielded Aluminum	**V2-T2-34**
Three-Phase Shielded Copper	**V2-T2-42**
Accessories	**V2-T2-50**
Technical Data and Specifications	**V2-T2-50**
K-Factor	**V2-T2-51**
Aluminum	**V2-T2-52**
Copper	**V2-T2-57**

Product Description

Note: The following pages provide listings for most standard transformer ratings and catalog numbers. For other ratings or catalog numbers not shown, or for special enclosure types (including stainless steel), refer to Eaton.

Types DS-3, DT-3

- Ventilated, NEMA 2 enclosure standard
- Suitable for indoor applications, outdoors when weathershields are also installed
- Upright mounting only
- 220°C insulation system
- 150°C rise standard; 115°C or 80°C rise optional
- Available in single-phase ratings 15–167 kVA, 600 volts primary (DS-3)
- Available in three-phase ratings 15–1500 kVA and up to 600 volts primary (DT-3)

Application Description

NEMA TP-1-2002 compliant energy-efficient transformers are specifically designed to meet the energy efficiency standards set forth in NEMA Standards publication, TP-1-2002, "Guide for Determining Energy Efficiency for Distribution Transformers." Surveys have shown that the average loading of low voltage dry-type distribution transformers, over a 24-hour period, is approximately 35%. NEMA TP-1 compliant transformers are optimized to offer maximum efficiency at 35% of nameplate rating.

The range of products covered by NEMA TP-1-2002 are:

NEMA TP-1-2002 Product Range

Rating	Voltage Class	Voltage
	Primary voltage	34.5 kV and below
	Secondary voltage	600V and below
Dry-Type Rating	Single-phase	10–833 kVA
	Three-phase	15–2500 kVA
Liquid Rating	Single-phase	10–833 kVA
	Three-phase	15–2500 kVA

Transformers that are currently specifically excluded from the scope of NEMA Standard TP-1-2002 include:

- Liquid-filled transformers below 10 kVA
- Dry-type transformers below 15 kVA
- AC and DC drives transformers
- Rectifier transformers designed for high harmonics
- Autotransformers
- Non-distribution transformers, such as UPS transformers
- Special impedance or regulation transformers
- Regulating transformers
- Sealed and non-ventilated transformers
- Machine tool transformers
- Welding transformers
- Transformers with tap ranges greater than 15%
- Transformers with a frequency other than 60 Hz
- Grounding transformers
- Testing transformers

Efficiency levels set forth in NEMA TP-1-2002.

NEMA TP-1-2002 Efficiency Levels

Tables of Energy Efficiency NEMA Class 1 Efficiency Levels Dry-Type Distribution Transformers—Low Voltage (600V and below)

Single-Phase		Three-Phase	
kVA	**Efficiency**	**kVA**	**Efficiency**
15	97.7	15	97.0
25	98.0	30	97.5
37.5	98.2	45	97.7
50	98.3	75	98.0
75	98.5	112.5	98.2
100	98.6	150	98.3
167	98.7	225	98.5
250	98.8	300	98.6
333	98.9	500	98.7
—	—	750	98.8
—	—	1000	98.9

Features, Benefits and Functions

- 60 Hz operation (except as noted)
- Short-term overload capability as required by ANSI
- Meet NEMA ST-20 sound levels
- Meet federal energy efficiency requirements for low voltage dry-type distribution transformers effective as of January 1, 2007

Standards and Certifications

- UL® listed

Listed

Industry Standards

All Eaton dry-type distribution and control transformers are built and tested in accordance with applicable NEMA, ANSI and IEEE Standards. All 600 volt class transformers are UL listed unless otherwise noted.

Seismically Qualified

Eaton manufactured dry-type distribution transformers are seismically qualified and exceed requirements of the Uniform Building Code (UBC), International Building Code (IBC) and California Code Title 24.

Catalog Number Selection

Please refer to Section 2.7 **Page V2-T2-187**.

Product Selection

Additional Product Selection information begins on **Page V2-T2-189**.

Single-Phase—Type DS-3 60 Hz NEMA TP-1 Energy-Efficient—Aluminum Windings

208 Volts to 120/240 Volts

kVA	Full Capacity Taps FCAN	FCBN	Type	°C Temp. Rise	Frame	Wiring Diagram Number	Weight Lbs (kg) ①	Weathershield	Catalog Number
15	2 at +2.5%	4 at –2.5%	DS-3	150	816	260A	226 (103)	**WS11**	**T29M11S15EE**
25	2 at +2.5%	4 at –2.5%	DS-3	150	818	260A	346 (157)	**WS11**	**T29M11S25EE**
37.5	2 at +2.5%	4 at –2.5	DS-3	150	818	260A	374 (170)	**WS11**	**T29M11S37EE**
50	2 at +2.5%	4 at –2.5%	DS-3	150	819	260A	545 (247)	**WS16**	**T29M11S50EE**
75	1 at +5%	2 at –5%	DS-3	150	819	551A	568 (258)	**WS16**	**T29R11S75EE**
100	1 at +5%	2 at –5%	DS-3	150	814E	449A	1178 (535)	**WS13**	**T29R11S99EE**

240 x 480 Volts to 120/240 Volts

kVA	Full Capacity Taps FCAN	FCBN	Type	°C Temp. Rise	Frame	Wiring Diagram Number	Weight Lbs (kg) ①	Weathershield	Catalog Number
15	②	②	DS-3	150	842	3XA	196 (89)	**WS45**	**T20P11S15AEE**
25	②	②	DS-3	150	842	3XA	261 (118)	**WS45**	**T20P11S25AEE**
37.5	②	②	DS-3	150	843	3XA	304 (138)	**WS43**	**T20P11S37AEE**
50	②	②	DS-3	150	843	3XA	396 (180)	**WS43**	**T20P11S50AEE**
75	②	②	DS-3	150	844	3XA	688 (312)	**WS44**	**T20P11S75AEE**
100	②	②	DS-3	150	844	3XA	699 (317)	**WS44**	**T20P11S99AEE**
167	2 at +2.5%	4 at –2.5%	DS-3	150	814E	288A	1294 (587)	**WS13**	**T48M11S67EE** ③
15	②	②	DS-3	115	816	3XA	246 (112)	**WS11**	**T20P11F15EE**
25	②	②	DS-3	115	818	3XA	373 (169)	**WS11**	**T20P11F25EE**
37.5	②	②	DS-3	115	818	3XA	380 (173)	**WS11**	**T20P11F37EE**
50	②	②	DS-3	115	819	3XA	590 (268)	**WS16**	**T20P11F50EE**
75	②	②	DS-3	115	820	3XA	691 (314)	**WS16**	**T20P11F75EE**
100	②	②	DS-3	115	821	3XA	844 (383)	**WS13**	**T20P11F99EE**
15	②	②	DS-3	80	818	3XA	360 (163)	**WS11**	**T20P11B15EE**
25	②	②	DS-3	80	818	3XA	370 (168)	**WS11**	**T20P11B25EE**
37.5	②	②	DS-3	80	819	3XA	565 (257)	**WS16**	**T20P11B37EE**
50	②	②	DS-3	80	820	3XA	680 (309)	**WS16**	**T20P11B50EE**
75	②	②	DS-3	80	821	3XA	900 (409)	**WS13**	**T20P11B75EE**

Notes

① Weights subject to change.

② 1 at +5%, 2 at –5% at 240 volts primary; 2 at +2.5%, 4 at –2.5% at 480 volts primary.

③ 480 volt primary only.

For other ratings or catalog numbers not shown, or for special enclosure types (including stainless steel), refer to Eaton. Frame drawings/dimensions information begins on **Page V2-T2-216**.

Single-Phase—Type DS-3 60 Hz NEMA TP-1 Energy-Efficient—Aluminum Windings

277 Volts to 120/240 Volts

kVA	Full Capacity Taps FCAN	FCBN	Type	°C Temp. Rise	Frame	Wiring Diagram Number	Weight Lbs (kg) ①	Weathershield	Catalog Number
15	2 at +2.5%	4 at –2.5%	DS-3	150	816	262C	220 (100)	**WS11**	**T27M11S15EE**
25	2 at +2.5%	4 at –2.5%	DS-3	150	818	262C	346 (157)	**WS11**	**T27M11S25EE**
37.5	2 at +2.5%	4 at –2.5%	DS-3	150	818	262C	391 (178)	**WS11**	**T27M11S37EE**
50	2 at +2.5%	4 at –2.5%	DS-3	150	819	262C	555 (252)	**WS16**	**T27M11S50EE**
75	1 at +5%	2 at –5%	DS-3	150	819	②	568 (258)	**WS16**	**T27R11S75EE**
100	1 at +5%	2 at –5%	DS-3	150	814E	②	1178 (535)	**WS13**	**T27R11S99EE**

208 x 416 Volts to 120/240 Volts

kVA	Full Capacity Taps FCAN	FCBN	Type	°C Temp. Rise	Frame	Wiring Diagram Number	Weight Lbs (kg) ①	Weathershield	Catalog Number
15	③	③	DS-3	150	816	3XF	246 (112)	**WS11**	**T18P11S15EE**
25	③	③	DS-3	150	818	3XF	359 (163)	**WS11**	**T18P11S25EE**
37.5	③	③	DS-3	150	818	3XF	374 (170)	**WS11**	**T18P11S37EE**
50	③	③	DS-3	150	819	3XF	555 (252)	**WS16**	**T18P11S50EE**
75	③	③	DS-3	150	820	3XF	665 (302)	**WS16**	**T18P11S75EE**
100	③	③	DS-3	150	821	3XF	841 (382)	**WS13**	**T18P11S99EE**

600 Volts to 120/240 Volts

kVA	Full Capacity Taps FCAN	FCBN	Type	°C Temp. Rise	Frame	Wiring Diagram Number	Weight Lbs (kg) ①	Weathershield	Catalog Number
15	2 at +2.5%	4 at –2.5%	DS-3	150	816	262B	243 (110)	**WS11**	**T60M11S15EE**
25	2 at +2.5%	4 at –2.5%	DS-3	150	818	262B	355 (161)	**WS11**	**T60M11S25EE**
37.5	2 at +2.5%	4 at –2.5%	DS-3	150	818	262B	375 (170)	**WS11**	**T60M11S37EE**
50	2 at +2.5%	4 at –2.5%	DS-3	150	819	262B	594 (270)	**WS16**	**T60M11S50EE**
75	2 at +2.5%	4 at –2.5%	DS-3	150	820	262B	755 (343)	**WS16**	**T60M11S75EE**
100	2 at +2.5%	4 at –2.5%	DS-3	150	821	262B	865 (393)	**WS13**	**T60M11S99EE**

Notes

① Weights subject to change.

② Contact your local Eaton sales office for these details.

③ 1 at +5%, 2 at –5% at 208 volts primary; 2 at +2.5%, 4 at –2.5% at 416 volts primary.

For other ratings or catalog numbers not shown, or for special enclosure types (including stainless steel), refer to Eaton. Frame drawings/dimensions information begins on **Page V2-T2-216**.

Single-Phase—Type DS-3 60 Hz NEMA TP-1 Energy-Efficient—Copper Windings

208 Volts to 120/240 Volts

kVA	Full Capacity Taps FCAN	FCBN	Type	°C Temp. Rise	Frame	Wiring Diagram Number	Weight Lbs (kg) ①	Weathershield	Catalog Number
15	2 at +2.5%	4 at –2.5%	DS-3	150	816	260A	275 (125)	**WS11**	**T29M11S15CUEE**
25	2 at +2.5%	4 at –2.5%	DS-3	150	818	260A	390 (177)	**WS11**	**T29M11S25CUEE**
37.5	2 at +2.5%	4 at –2.5%	DS-3	150	818	260A	440 (200)	**WS11**	**T29M11S37CUEE**
50	2 at +2.5%	4 at –2.5%	DS-3	150	819	260A	661 (300)	**WS16**	**T29M11S50CUEE**
75	1 at +5%	2 at –5%	DS-3	150	820	551A	805 (365)	**WS16**	**T29R11S75CUEE**
100	1 at +5%	2 at –5%	DS-3	150	821	449A	970 (440)	**WS13**	**T29R11S99CUEE**

240 x 480 Volts to 120/240 Volts

kVA	Full Capacity Taps FCAN	FCBN	Type	°C Temp. Rise	Frame	Wiring Diagram Number	Weight Lbs (kg) ①	Weathershield	Catalog Number
15	②	②	DS-3	150	816	3XA	270 (123)	**WS11**	**T20P11S15CUEE**
25	②	②	DS-3	150	818	3XA	406 (184)	**WS11**	**T20P11S25CUEE**
37.5	②	②	DS-3	150	818	3XA	453 (206)	**WS11**	**T20P11S37CUEE**
50	②	②	DS-3	150	819	3XA	657 (298)	**WS16**	**T20P11S50CUEE**
75	②	②	DS-3	150	820	3XA	803 (365)	**WS16**	**T20P11S75CUEE**
100	②	②	DS-3	150	821	3XA	960 (436)	**WS13**	**T20P11S99CUEE**
167	2 at +2.5%	4 at –2.5%	DS-3	150	814E	288A	1665 (756)	**WS13**	**T48M11S67CUEE** ③
15	②	②	DS-3	115	816	3XA	264 (120)	**WS11**	**T20P11F15CUEE**
25	②	②	DS-3	115	818	3XA	420 (191)	**WS11**	**T20P11F25CUEE**
37.5	②	②	DS-3	115	818	3XA	450 (204)	**WS11**	**T20P11F37CUEE**
50	②	②	DS-3	115	819	3XA	703 (319)	**WS16**	**T20P11F50CUEE**
75	②	②	DS-3	115	820	3XA	793 (360)	**WS16**	**T20P11F75CUEE**
100	②	②	DS-3	115	821	3XA	1085 (493)	**WS13**	**T20P11F99CUEE**
15	②	②	DS-3	80	818	3XA	407 (185)	**WS11**	**T20P11B15CUEE**
25	②	②	DS-3	80	818	3XA	430 (195)	**WS11**	**T20P11B25CUEE**
37.5	②	②	DS-3	80	819	3XA	685 (311)	**WS16**	**T20P11B37CUEE**
50	②	②	DS-3	80	820	3XA	799 (363)	**WS16**	**T20P11B50CUEE**
75	②	②	DS-3	80	821	3XA	1056 (479)	**WS13**	**T20P11B75CUEE**

277 Volts to 120/240 Volts

kVA	Full Capacity Taps FCAN	FCBN	Type	°C Temp. Rise	Frame	Wiring Diagram Number	Weight Lbs (kg) ①	Weathershield	Catalog Number
15	2 at +2.5%	4 at –2.5%	DS-3	150	816	262C	275 (125)	**WS11**	**T27M11S15CUEE**
25	2 at +2.5%	4 at –2.5%	DS-3	150	818	262C	390 (177)	**WS11**	**T27M11S25CUEE**
37.5	2 at +2.5%	4 at –2.5%	DS-3	150	818	262C	440 (200)	**WS11**	**T27M11S37CUEE**
50	2 at +2.5%	4 at –2.5%	DS-3	150	819	262C	661 (300)	**WS16**	**T27M11S50CUEE**
75	1 at +5%	2 at –5%	DS-3	150	820	④	805 (365)	**WS16**	**T27R11S75CUEE**
100	1 at +5%	2 at –5%	DS-3	150	821	④	970 (440)	**WS13**	**T27R11S99CUEE**

Notes

① Weights subject to change.

② 1 at +5%, 2 at –5% at 240 volts primary; 2 at +2.5%, 4 at –2.5% at 480 volts primary.

③ 480 volt primary only.

④ Contact your local Eaton sales office for these details.

For other ratings or catalog numbers not shown, or for special enclosure types (including stainless steel), refer to Eaton. Frame drawings/dimensions information begins on **Page V2-T2-216**.

Single-Phase—Type DS-3 60 Hz NEMA TP-1 Energy-Efficient—Copper Windings

208 x 416 Volts to 120/240 Volts

kVA	Full Capacity Taps FCAN	FCBN	Type	°C Temp. Rise	Frame	Wiring Diagram Number	Weight Lbs (kg) ②	Weathershield	Catalog Number
15	①	①	DS-3	150	816	3XF	275 (125)	**WS11**	**T18P11S15CUEE**
25	①	①	DS-3	150	818	3XF	390 (177)	**WS11**	**T18P11S25CUEE**
37.5	①	①	DS-3	150	818	3XF	440 (200)	**WS11**	**T18P11S37CUEE**
50	①	①	DS-3	150	819	3XF	661 (300)	**WS16**	**T18P11S50CUEE**
75	①	①	DS-3	150	820	3XF	805 (365)	**WS16**	**T18P11S75CUEE**
100	①	①	DS-3	150	821	3XF	970 (440)	**WS13**	**T18P11S99CUEE**

600 Volts to 120/240 Volts

kVA	Full Capacity Taps FCAN	FCBN	Type	°C Temp. Rise	Frame	Wiring Diagram Number	Weight Lbs (kg) ②	Weathershield	Catalog Number
15	2 at +2.5%	4 at –2.5%	DS-3	150	816	262B	290 (132)	**WS11**	**T60M11S15CUEE**
25	2 at +2.5%	4 at –2.5%	DS-3	150	818	262B	465 (211)	**WS11**	**T60M11S25CUEE**
37.5	2 at +2.5%	4 at –2.5%	DS-3	150	818	262B	495 (225)	**WS11**	**T60M11S37CUEE**
50	2 at +2.5%	4 at –2.5%	DS-3	150	819	262B	775 (352)	**WS16**	**T60M11S50CUEE**
75	2 at +2.5%	4 at –2.5%	DS-3	150	820	262B	900 (409)	**WS16**	**T60M11S75CUEE**
100	2 at +2.5%	4 at –2.5%	DS-3	150	821	262B	1195 (543)	**WS13**	**T60M11S99CUEE**

Notes

① 1 at +5%, 2 at –5% at 208 volts primary; 2 at +2.5%, 4 at –2.5% at 416 volts primary.

② Weights subject to change.

For other ratings or catalog numbers not shown, or for special enclosure types (including stainless steel), refer to Eaton. Frame drawings/dimensions information begins on **Page V2-T2-216**.

Single-Phase—Type DS-3 60 Hz NEMA TP-1 Energy-Efficient Electrostatically Shielded—Aluminum Windings

208 Volts to 120/240 Volts

kVA	Full Capacity Taps FCAN	FCBN	Type	°C Temp. Rise	Frame	Wiring Diagram Number	Weight Lbs (kg) ①	Weathershield	Catalog Number
15	2 at +2.5%	4 at –2.5%	DS-3	150	816	264A	275 (125)	**WS11**	**T29M11E15EE**
25	2 at +2.5%	4 at –2.5%	DS-3	150	818	264A	390 (177)	**WS11**	**T29M11E25EE**
37.5	2 at +2.5%	4 at –2.5%	DS-3	150	818	264A	440 (200)	**WS11**	**T29M11E37EE**
50	2 at +2.5%	4 at –2.5%	DS-3	150	819	264A	661 (300)	**WS16**	**T29M11E50EE**
75	1 at +5%	2 at –5%	DS-3	150	820	450A	805 (366)	**WS16**	**T29R11E75EE**
100	1 at +5%	2 at –5%	DS-3	150	821	450A	970 (440)	**WS13**	**T29R11E99EE**

240 x 480 Volts to 120/240 Volts

kVA	Full Capacity Taps FCAN	FCBN	Type	°C Temp. Rise	Frame	Wiring Diagram Number	Weight Lbs (kg) ①	Weathershield	Catalog Number
15	②	②	DS-3	150	816	261A	246 (112)	**WS11**	**T20P11E15EE**
25	②	②	DS-3	150	818	261A	359 (163)	**WS11**	**T20P11E25EE**
37.5	②	②	DS-3	150	818	261A	374 (170)	**WS11**	**T20P11E37EE**
50	②	②	DS-3	150	819	261A	555 (252)	**WS16**	**T20P11E50EE**
75	②	②	DS-3	150	820	261A	740 (336)	**WS16**	**T20P11E75EE**
100	②	②	DS-3	150	821	261A	841 (382)	**WS13**	**T20P11E99EE**
167	2 at +2.5%	4 at –2.5%	DS-3	150	814E	227A	1294 (587)	**WS13**	**T48M11E67EE** ③
15	②	②	DS-3	115	816	261A	246 (112)	**WS11**	**T20P11F15EEES**
25	②	②	DS-3	115	818	261A	373 (169)	**WS11**	**T20P11F25EEES**
37.5	②	②	DS-3	115	818	261A	380 (173)	**WS11**	**T20P11F37EEES**
50	②	②	DS-3	115	819	261A	590 (268)	**WS16**	**T20P11F50EEES**
75	②	②	DS-3	115	820	261A	691 (314)	**WS16**	**T20P11F75EEES**
100	②	②	DS-3	115	821	261A	844 (383)	**WS13**	**T20P11F99EEES**
15	②	②	DS-3	80	818	261A	360 (163)	**WS11**	**T20P11B15EEES**
25	②	②	DS-3	80	818	261A	370 (168)	**WS11**	**T20P11B25EEES**
37.5	②	②	DS-3	80	819	261A	565 (257)	**WS16**	**T20P11B37EEES**
50	②	②	DS-3	80	820	261A	680 (309)	**WS16**	**T20P11B50EEES**
75	②	②	DS-3	80	821	261A	900 (409)	**WS13**	**T20P11B75EEES**

277 Volts to 120/240 Volts

kVA	Full Capacity Taps FCAN	FCBN	Type	°C Temp. Rise	Frame	Wiring Diagram Number	Weight Lbs (kg) ①	Weathershield	Catalog Number
15	2 at +2.5%	4 at –2.5%	DS-3	150	816	④	275 (125)	**WS11**	**T27M11E15EE**
25	2 at +2.5%	4 at –2.5%	DS-3	150	818	④	390 (177)	**WS11**	**T27M11E25EE**
37.5	2 at +2.5%	4 at –2.5%	DS-3	150	818	④	440 (200)	**WS11**	**T27M11E37EE**
50	2 at +2.5%	4 at –2.5%	DS-3	150	819	④	661 (300)	**WS16**	**T27M11E50EE**
75	1 at +5%	2 at –5%	DS-3	150	820	④	805 (366)	**WS16**	**T27R11E75EE**
100	1 at +5%	2 at –5%	DS-3	150	821	④	970 (440)	**WS13**	**T27R11E99EE**

Notes

① Weights subject to change.

② 1 at +5%, 2 at –5% at 240 volts primary; 2 at +2.5%, 4 at –2.5% at 480 volts primary.

③ 480 volt primary only.

④ Contact your local Eaton sales office for these details.

For other ratings or catalog numbers not shown, or for special enclosure types (including stainless steel), refer to Eaton. Frame drawings/dimensions information begins on **Page V2-T2-216**.

Single-Phase—Type DS-3 60 Hz NEMA TP-1 Energy-Efficient Electrostatically Shielded—Aluminum Windings

208 x 416 Volts to 120/240 Volts

kVA	Full Capacity Taps FCAN	FCBN	Type	°C Temp. Rise	Frame	Wiring Diagram Number	Weight Lbs (kg) ②	Weathershield	Catalog Number
15	①	①	DS-3	150	816	243H	275 (125)	**WS11**	**T43P11E15EE**
25	①	①	DS-3	150	818	243H	390 (177)	**WS11**	**T43P11E25EE**
37.5	①	①	DS-3	150	818	243H	440 (200)	**WS11**	**T43P11E37EE**
50	①	①	DS-3	150	819	243H	661 (300)	**WS16**	**T43P11E50EE**
75	①	①	DS-3	150	820	③	805 (366)	**WS16**	**T43P11E75EE**
100	①	①	DS-3	150	821	③	970 (440)	**WS13**	**T43P11E99EE**

600 Volts to 120/240 Volts

kVA	Full Capacity Taps FCAN	FCBN	Type	°C Temp. Rise	Frame	Wiring Diagram Number	Weight Lbs (kg) ②	Weathershield	Catalog Number
15	2 at +2.5%	4 at –2.5%	DS-3	150	816	259A	275 (125)	**WS11**	**T60M11E15EE**
25	2 at +2.5%	4 at –2.5%	DS-3	150	818	259A	390 (177)	**WS11**	**T60M11E25EE**
37.5	2 at +2.5%	4 at –2.5%	DS-3	150	818	259A	440 (200)	**WS11**	**T60M11E37EE**
50	2 at +2.5%	4 at –2.5%	DS-3	150	819	259A	661 (300)	**WS16**	**T60M11E50EE**
75	1 at +5%	2 at –5%	DS-3	150	820	③	805 (366)	**WS16**	**T60R11E75EE**
100	1 at +5%	2 at –5%	DS-3	150	821	③	970 (440)	**WS13**	**T60R11E99EE**

Notes

① 1 at +5%, 2 at –5% at 208 volts primary; 2 at +2.5%, 4 at –2.5% at 416 volts primary.
② Weights subject to change.
③ Contact your local Eaton sales office for these details.

For other ratings or catalog numbers not shown, or for special enclosure types (including stainless steel), refer to Eaton. Frame drawings/dimensions information begins on **Page V2-T2-216**.

Single-Phase—Type DS-3 60 Hz NEMA TP-1 Energy-Efficient Electrostatically Shielded—Copper Windings

208 Volts to 120/240 Volts

kVA	Full Capacity Taps FCAN	FCBN	Type	°C Temp. Rise	Frame	Wiring Diagram Number	Weight Lbs (kg) ①	Weathershield	Catalog Number
15	2 at +2.5%	4 at –2.5%	DS-3	150	816	264A	270 (123)	**WS11**	**T29M11E15CUEE**
25	2 at +2.5%	4 at –2.5%	DS-3	150	818	264A	423 (192)	**WS11**	**T29M11E25CUEE**
37.5	2 at +2.5%	4 at –2.5%	DS-3	150	818	264A	437 (198)	**WS11**	**T29M11E37CUEE**
50	2 at +2.5%	4 at –2.5%	DS-3	150	819	264A	620 (281)	**WS16**	**T29M11E50CUEE**
75	1 at +5%	2 at –5%	DS-3	150	820	450A	810 (368)	**WS16**	**T29R11E75CUEE**
100	1 at +5%	2 at –5%	DS-3	150	821	450A	980 (445)	**WS13**	**T29R11E99CUEE**

240 x 480 Volts to 120/240 Volts

kVA	Full Capacity Taps FCAN	FCBN	Type	°C Temp. Rise	Frame	Wiring Diagram Number	Weight Lbs (kg) ①	Weathershield	Catalog Number
15	②	②	DS-3	150	816	261A	270 (123)	**WS11**	**T20P11E15CUEE**
25	②	②	DS-3	150	818	261A	423 (192)	**WS11**	**T20P11E25CUEE**
37.5	②	②	DS-3	150	818	261A	437 (198)	**WS11**	**T20P11E37CUEE**
50	②	②	DS-3	150	819	261A	620 (281)	**WS16**	**T20P11E50CUEE**
75	②	②	DS-3	150	820	261A	810 (368)	**WS16**	**T20P11E75CUEE**
100	②	②	DS-3	150	821	261A	980 (445)	**WS13**	**T20P11E99CUEE**
15	②	②	DS-3	115	816	261A	254 (115)	**WS11**	**T20P11F15CUEEES**
25	②	②	DS-3	115	818	261A	453 (206)	**WS11**	**T20P11F25CUEEES**
37.5	②	②	DS-3	115	818	261A	480 (218)	**WS11**	**T20P11F37CUEEES**
50	②	②	DS-3	115	819	261A	718 (326)	**WS16**	**T20P11F50CUEEES**
75	②	②	DS-3	115	820	261A	793 (360)	**WS16**	**T20P11F75CUEEES**
100	②	②	DS-3	115	821	261A	1000 (454)	**WS13**	**T20P11F99CUEEES**
15	②	②	DS-3	80	818	261A	240 (109)	**WS11**	**T20P11B15CUEEES**
25	②	②	DS-3	80	818	261A	430 (195)	**WS11**	**T20P11B25CUEEES**
37.5	②	②	DS-3	80	819	261A	700 (318)	**WS16**	**T20P11B37CUEEES**
50	②	②	DS-3	80	820	261A	738 (335)	**WS16**	**T20P11B50CUEEES**
75	②	②	DS-3	80	821	261A	960 (436)	**WS13**	**T20P11B75CUEEES**

277 Volts to 120/240 Volts

kVA	Full Capacity Taps FCAN	FCBN	Type	°C Temp. Rise	Frame	Wiring Diagram Number	Weight Lbs (kg) ①	Weathershield	Catalog Number
15	2 at +2.5%	4 at –2.5%	DS-3	150	816	③	270 (123)	**WS11**	**T27M11E15CUEE**
25	2 at +2.5%	4 at –2.5%	DS-3	150	818	③	423 (192)	**WS11**	**T27M11E25CUEE**
37.5	2 at +2.5%	4 at –2.5%	DS-3	150	818	③	437 (198)	**WS11**	**T27M11E37CUEE**
50	2 at +2.5%	4 at –2.5%	DS-3	150	819	③	620 (281)	**WS16**	**T27M11E50CUEE**
75	1 at +5%	2 at –5%	DS-3	150	820	③	810 (368)	**WS16**	**T27R11E75CUEE**
100	1 at +5%	2 at –5%	DS-3	150	821	③	980 (445)	**WS13**	**T27R11E99CUEE**

Notes

① Weights subject to change.

② 1 at +5%, 2 at –5% at 240 volts primary; 2 at +2.5%, 4 at –2.5% at 480 volts primary.

③ Contact your local Eaton sales office for these details.

For other ratings or catalog numbers not shown, or for special enclosure types (including stainless steel), refer to Eaton. Frame drawings/dimensions information begins on **Page V2-T2-216**.

Single-Phase—Type DS-3 60 Hz NEMA TP-1 Energy-Efficient Electrostatically Shielded—Copper Windings

208 x 416 Volts to 120/240 Volts

kVA	Full Capacity Taps FCAN	FCBN	Type	°C Temp. Rise	Frame	Wiring Diagram Number	Weight Lbs (kg) ②	Weathershield	Catalog Number
15	①	①	DS-3	150	816	243H	270 (123)	**WS11**	**T43P11E15CUEE**
25	①	①	DS-3	150	818	243H	423 (192)	**WS11**	**T43P11E25CUEE**
37.5	①	①	DS-3	150	818	243H	437 (198)	**WS11**	**T43P11E37CUEE**
50	①	①	DS-3	150	819	243H	620 (281)	**WS16**	**T43P11E50CUEE**
75	①	①	DS-3	150	820	③	810 (368)	**WS16**	**T43P11E75CUEE**
100	①	①	DS-3	150	821	③	980 (445)	**WS13**	**T43P11E99CUEE**

600 Volts to 120/240 Volts

kVA	Full Capacity Taps FCAN	FCBN	Type	°C Temp. Rise	Frame	Wiring Diagram Number	Weight Lbs (kg) ②	Weathershield	Catalog Number
15	2 at +2.5%	4 at –2.5%	DS-3	150	816	259A	270 (123)	**WS11**	**T60M11E15CUEE**
25	2 at +2.5%	4 at –2.5%	DS-3	150	818	259A	423 (192)	**WS11**	**T60M11E25CUEE**
37.5	2 at +2.5%	4 at –2.5%	DS-3	150	818	259A	437 (198)	**WS11**	**T60M11E37CUEE**
50	2 at +2.5%	4 at –2.5%	DS-3	150	819	259A	620 (281)	**WS16**	**T60M11E50CUEE**
75	1 at +5%	2 at –5%	DS-3	150	820	③	810 (368)	**WS16**	**T60R11E75CUEE**
100	1 at +5%	2 at –5%	DS-3	150	821	③	980 (445)	**WS13**	**T60R11E99CUEE**

Notes

① 1 at +5%, 2 at –5% at 208 volts primary; 2 at +2.5%, 4 at –2.5% at 416 volts primary.
② Weights subject to change.
③ Contact your local Eaton sales office for these details.

For other ratings or catalog numbers not shown, or for special enclosure types (including stainless steel), refer to Eaton. Frame drawings/dimensions information begins on **Page V2-T2-216**.

Three-Phase—Type DT-3 60 Hz NEMA TP-1 Energy-Efficient—Aluminum Windings

208 Delta Volts to 208Y/120 Volts

kVA	Full Capacity Taps FCAN	FCBN	Type	°C Temp. Rise	Frame	Wiring Diagram Number	Weight Lbs (kg) ①	Weathershield	Catalog Number
15	2 at +2.5%	4 at –2.5%	DT-3	150	912D	280E	218 (99)	**WS38**	**V29M28T15EE**
30	2 at +2.5%	4 at –2.5%	DT-3	150	912D	280E	299 (136)	**WS38**	**V29M28T30EE**
45	2 at +2.5%	4 at –2.5%	DT-3	150	912D	280E	376 (171)	**WS38**	**V29M28T45EE**
75	2 at +2.5%	4 at –2.5%	DT-3	150	914F	280E	564 (256)	**WS39**	**V29M28T75EE**
112.5	1 at +5%	2 at –5%	DT-3	150	916A	324A	930 (422)	**WS19**	**V29R28T12EE**
150	1 at +5%	2 at –5%	DT-3	150	916A	324A	1013 (460)	**WS19**	**V29R28T49EE**
225	1 at +5%	2 at –5%	DT-3	150	918A	324A	1443 (655)	**WS34**	**V29R28T22EE**
300	1 at +5%	2 at –5%	DT-3	150	919E	289D	1697 (770)	**WS35**	**V29R28T33EE**
500	1 at +5%	2 at –5%	DT-3	150	920E	289D	2690 (1221)	**WS35**	**V29R28T55EE**
15	2 at +2.5%	4 at –2.5%	DT-3	115	912D	280E	240 (109)	**WS38**	**V29M28F15EE**
30	2 at +2.5%	4 at –2.5%	DT-3	115	912D	280E	320 (145)	**WS38**	**V29M28F30EE**
45	2 at +2.5%	4 at –2.5%	DT-3	115	912D	280E	396 (180)	**WS38**	**V29M28F45EE**
75	2 at +2.5%	4 at –2.5%	DT-3	115	914F	280E	607 (276)	**WS39**	**V29M28F75EE**
112.5	1 at +5%	2 at –5%	DT-3	115	916A	324A	960 (436)	**WS19**	**V29R28F12EE**
150	1 at +5%	2 at –5%	DT-3	115	916A	324A	1060 (481)	**WS19**	**V29R28F49EE**
225	1 at +5%	2 at –5%	DT-3	115	918A	324A	1500 (681)	**WS34**	**V29R28F22EE**
300	1 at +5%	2 at –5%	DT-3	115	919E	289D	1800 (817)	**WS35**	**V29R28F33EE**
500	1 at +5%	2 at –5%	DT-3	115	920E	289D	2900 (1317)	**WS35**	**V29R28F55EE**
15	2 at +2.5%	4 at –2.5%	DT-3	80	912D	280E	280 (127)	**WS38**	**V29M28B15EE**
30	2 at +2.5%	4 at –2.5%	DT-3	80	912D	280E	350 (159)	**WS38**	**V29M28B30EE**
45	2 at +2.5%	4 at –2.5%	DT-3	80	914F	280E	560 (254)	**WS39**	**V29M28B45EE**
75	2 at +2.5%	4 at –2.5%	DT-3	80	916A	280E	810 (368)	**WS19**	**V29M28B75EE**
112.5	2 at +2.5%	4 at –2.5%	DT-3	80	916A	280E	950 (431)	**WS19**	**V29M28B12EE**
150	1 at +5%	2 at –5%	DT-3	80	918A	324A	1430 (649)	**WS34**	**V29R28B49EE**
225	1 at +5%	2 at –5%	DT-3	80	919E	289D	1750 (795)	**WS35**	**V29R28B22EE**
300	1 at +5%	2 at –5%	DT-3	80	920E	289D	2400 (1090)	**WS35**	**V29R28B33EE**

Notes

① Weights subject to change.

For other ratings or catalog numbers not shown, or for special enclosure types (including stainless steel), refer to Eaton. Frame drawings/dimensions information begins on **Page V2-T2-216**.

Three-Phase—Type DT-3 60 Hz NEMA TP-1 Energy-Efficient—Aluminum Windings

208 Delta Volts to 480Y/277 Volts

kVA	Full Capacity Taps FCAN	FCBN	Type	°C Temp. Rise	Frame	Wiring Diagram Number	Weight Lbs (kg) ①	Weathershield	Catalog Number
15	2 at +2.5%	4 at –2.5%	DT-3	150	912D	342B	196 (89)	**WS38**	**V29M47T15EE**
30	2 at +2.5%	4 at –2.5%	DT-3	150	912D	342B	296 (134)	**WS38**	**V29M47T30EE**
45	2 at +2.5%	4 at –2.5%	DT-3	150	912D	342B	385 (175)	**WS38**	**V29M47T45EE**
75	2 at +2.5%	4 at –2.5%	DT-3	150	914F	342B	590 (268)	**WS39**	**V29M47T75EE**
112.5	1 at +5%	2 at –5%	DT-3	150	916A	351A	784 (356)	**WS19**	**V29R47T12EE**
150	1 at +5%	2 at –5%	DT-3	150	916A	351A	931 (423)	**WS19**	**V29R47T49EE**
225	1 at +5%	2 at –5%	DT-3	150	918A	333B	1550 (704)	**WS34**	**V29R47T22EE**
300	1 at +5%	2 at –5%	DT-3	150	919E	333B	2274 (1032)	**WS35**	**V29R47T33EE**
500	1 at +5%	2 at –5%	DT-3	150	919E	333B	2869 (1303)	**WS35**	**V29R47T55EE**
15	2 at +2.5%	4 at –2.5%	DT-3	115	912D	342B	215 (98)	**WS38**	**V29M47F15EE**
30	2 at +2.5%	4 at –2.5%	DT-3	115	912D	342B	380 (173)	**WS38**	**V29M47F30EE**
45	2 at +2.5%	4 at –2.5%	DT-3	115	912D	342B	400 (182)	**WS38**	**V29M47F45EE**
75	2 at +2.5%	4 at –2.5%	DT-3	115	914F	342B	585 (266)	**WS39**	**V29M47F75EE**
112.5	1 at +5%	2 at –5%	DT-3	115	916A	351A	800 (363)	**WS19**	**V29R47F12EE**
150	1 at +5%	2 at –5%	DT-3	115	916A	351A	950 (431)	**WS19**	**V29R47F49EE**
225	1 at +5%	2 at –5%	DT-3	115	918A	333B	1591 (722)	**WS34**	**V29R47F22EE**
300	1 at +5%	2 at –5%	DT-3	115	919E	333B	2320 (1053)	**WS35**	**V29R47F33EE**
500	1 at +5%	2 at –5%	DT-3	115	919E	333B	2950 (1339)	**WS35**	**V29R47F55EE**
15	2 at +2.5%	4 at –2.5%	DT-3	80	912D	342B	300 (136)	**WS38**	**V29M47B15EE**
30	2 at +2.5%	4 at –2.5%	DT-3	80	912D	342B	390 (177)	**WS38**	**V29M47B30EE**
45	2 at +2.5%	4 at –2.5%	DT-3	80	914F	342B	550 (249)	**WS39**	**V29M47B45EE**
75	1 at +5%	2 at –5%	DT-3	80	916A	351A	757 (344)	**WS19**	**V29R47B75EE**
112.5	1 at +5%	2 at –5%	DT-3	80	916A	351A	930 (422)	**WS19**	**V29R47B12EE**
150	1 at +5%	2 at –5%	DT-3	80	918A	333B	1550 (704)	**WS34**	**V29R47B49EE**
225	1 at +5%	2 at –5%	DT-3	80	919E	333B	2275 (1033)	**WS35**	**V29R47B22EE**
300	1 at +5%	2 at –5%	DT-3	80	920E	333B	2870 (1303)	**WS35**	**V29R47B33EE**

Notes

① Weights subject to change.

For other ratings or catalog numbers not shown, or for special enclosure types (including stainless steel), refer to Eaton. Frame drawings/dimensions information begins on **Page V2-T2-216**.

Three-Phase—Type DT-3 60 Hz NEMA TP-1 Energy-Efficient—Aluminum Windings

240 Delta Volts to 208Y/120 Volts

kVA	Full Capacity Taps FCAN	FCBN	Type	°C Temp. Rise	Frame	Wiring Diagram Number	Weight Lbs (kg) ①	Weathershield	Catalog Number
15	2 at +2.5%	4 at –2.5%	DT-3	150	912D	280C	206 (94)	**WS38**	**V24M28T15EE**
30	2 at +2.5%	4 at –2.5%	DT-3	150	912D	280C	297 (135)	**WS38**	**V24M28T30EE**
45	2 at +2.5%	4 at –2.5%	DT-3	150	912D	280C	332 (151)	**WS38**	**V24M28T45EE**
75	2 at +2.5%	4 at –2.5%	DT-3	150	914F	280C	562 (255)	**WS39**	**V24M28T75EE**
112.5	2 at +2.5%	4 at –2.5%	DT-3	150	916A	280C	760 (345)	**WS19**	**V24M28T12EE**
150	2 at +2.5%	4 at –2.5%	DT-3	150	916A	280C	974 (442)	**WS19**	**V24M28T49EE**
225	1 at +5%	2 at –5%	DT-3	150	917	289A	1460 (663)	**WS34**	**V24R28T22EE**
300	1 at +5%	2 at –5%	DT-3	150	918A	289A	1652 (750)	**WS34**	**V24R28T33EE**
500	1 at +5%	2 at –5%	DT-3	150	919E	289A	2690 (1221)	**WS35**	**V24R28T55EE**
15	2 at +2.5%	4 at –2.5%	DT-3	115	912D	280C	240 (109)	**WS38**	**V24M28F15EE**
30	2 at +2.5%	4 at –2.5%	DT-3	115	912D	280C	389 (177)	**WS38**	**V24M28F30EE**
45	2 at +2.5%	4 at –2.5%	DT-3	115	912D	280C	396 (180)	**WS38**	**V24M28F45EE**
75	2 at +2.5%	4 at –2.5%	DT-3	115	914F	280C	593 (269)	**WS39**	**V24M28F75EE**
112.5	2 at +2.5%	4 at –2.5%	DT-3	115	916A	280C	941 (427)	**WS19**	**V24M28F12EE**
150	1 at +5%	2 at –5%	DT-3	115	916A	280C	1060 (481)	**WS19**	**V24R28F49EE**
225	1 at +5%	2 at –5%	DT-3	115	917	289A	1500 (681)	**WS34**	**V24R28F22EE**
300	1 at +5%	2 at –5%	DT-3	115	918A	289A	1800 (817)	**WS34**	**V24R28F33EE**
500	1 at +5%	2 at –5%	DT-3	115	919E	289A	2900 (1317)	**WS35**	**V24R28F55EE**
15	2 at +2.5%	4 at –2.5%	DT-3	80	912D	280C	280 (127)	**WS38**	**V24M28B15EE**
30	2 at +2.5%	4 at –2.5%	DT-3	80	912D	280C	350 (159)	**WS38**	**V24M28B30EE**
45	2 at +2.5%	4 at –2.5%	DT-3	80	914F	280C	560 (254)	**WS39**	**V24M28B45EE**
75	2 at +2.5%	4 at –2.5%	DT-3	80	916A	280C	883 (401)	**WS19**	**V24M28B75EE**
112.5	1 at +5%	2 at –5%	DT-3	80	916A	280C	950 (431)	**WS19**	**V24R28B12EE**
150	1 at +5%	2 at –5%	DT-3	80	917	289A	1430 (649)	**WS34**	**V24R28B49EE**
225	1 at +5%	2 at –5%	DT-3	80	918A	289A	1750 (795)	**WS34**	**V24R28B22EE**
300	1 at +5%	2 at –5%	DT-3	80	919E	289A	2400 (1090)	**WS35**	**V24R28B33EE**

Notes

① Weights subject to change.

For other ratings or catalog numbers not shown, or for special enclosure types (including stainless steel), refer to Eaton. Frame drawings/dimensions information begins on **Page V2-T2-216**.

Three-Phase—Type DT-3 60 Hz NEMA TP-1 Energy-Efficient—Aluminum Windings

240 Delta Volts to 480Y/277 Volts

kVA	Full Capacity Taps FCAN	FCBN	Type	°C Temp. Rise	Frame	Wiring Diagram Number	Weight Lbs (kg) ①	Weathershield	Catalog Number
15	2 at +2.5%	4 at –2.5%	DT-3	150	912D	342L	227 (103)	**WS38**	**V24M47T15EE**
30	2 at +2.5%	4 at –2.5%	DT-3	150	912D	342L	306 (139)	**WS38**	**V24M47T30EE**
45	2 at +2.5%	4 at –2.5%	DT-3	150	912D	342L	380 (173)	**WS38**	**V24M47T45EE**
75	2 at +2.5%	4 at –2.5%	DT-3	150	914F	342L	573 (260)	**WS39**	**V24M47T75EE**
112.5	2 at +2.5%	4 at –2.5%	DT-3	150	916A	342L	800 (363)	**WS19**	**V24M47T12EE**
150	2 at +2.5%	4 at –2.5%	DT-3	150	916A	342L	885 (402)	**WS19**	**V24M47T49EE**
225	1 at +5%	2 at –5%	DT-3	150	918A	333A	1612 (732)	**WS34**	**V24R47T22EE**
300	1 at +5%	2 at –5%	DT-3	150	919E	333A	1652 (750)	**WS35**	**V24R47T33EE**
500	1 at +5%	2 at –5%	DT-3	150	919E	333A	2695 (1224)	**WS35**	**V24R47T55EE**
15	2 at +2.5%	4 at –2.5%	DT-3	115	912D	342L	240 (109)	**WS38**	**V24M47F15EE**
30	2 at +2.5%	4 at –2.5%	DT-3	115	912D	342L	389 (177)	**WS38**	**V24M47F30EE**
45	2 at +2.5%	4 at –2.5%	DT-3	115	912D	342L	396 (180)	**WS38**	**V24M47F45EE**
75	2 at +2.5%	4 at –2.5%	DT-3	115	914F	342L	593 (269)	**WS39**	**V24M47F75EE**
112.5	1 at +5%	2 at –5%	DT-3	115	916A	342L	941 (427)	**WS19**	**V24R47F12EE**
150	1 at +5%	2 at –5%	DT-3	115	916A	342L	1060 (481)	**WS19**	**V24R47F49EE**
225	1 at +5%	2 at –5%	DT-3	115	918A	333A	1500 (681)	**WS34**	**V24R47F22EE**
300	1 at +5%	2 at –5%	DT-3	115	919E	333A	1800 (817)	**WS35**	**V24R47F33EE**
500	1 at +5%	2 at –5%	DT-3	115	919E	333A	2900 (1317)	**WS35**	**V24R47F55EE**
15	2 at +2.5%	4 at –2.5%	DT-3	80	912D	342L	280 (127)	**WS38**	**V24M47B15EE**
30	2 at +2.5%	4 at –2.5%	DT-3	80	912D	342L	350 (159)	**WS38**	**V24M47B30EE**
45	2 at +2.5%	4 at –2.5%	DT-3	80	914F	342L	560 (254)	**WS39**	**V24M47B45EE**
75	2 at +2.5%	4 at –2.5%	DT-3	80	916A	342L	883 (401)	**WS19**	**V24M47B75EE**
112.5	1 at +5%	2 at –5%	DT-3	80	916A	342L	950 (431)	**WS19**	**V24R47B12EE**
150	1 at +5%	2 at –5%	DT-3	80	918A	333A	1430 (649)	**WS34**	**V24R47B49EE**
225	1 at +5%	2 at –5%	DT-3	80	919E	333A	1750 (795)	**WS35**	**V24R47B22EE**
300	1 at +5%	2 at –5%	DT-3	80	919E	333A	2400 (1090)	**WS35**	**V24R47B33EE**

Notes

① Weights subject to change.

For other ratings or catalog numbers not shown, or for special enclosure types (including stainless steel), refer to Eaton. Frame drawings/dimensions information begins on **Page V2-T2-216**.

Three-Phase—Type DT-3 60 Hz NEMA TP-1 Energy-Efficient—Aluminum Windings

440 Delta Volts to 220Y/127 Volts

kVA	Full Capacity Taps FCAN	FCBN	Type	°C Temp. Rise	Frame	Wiring Diagram Number	Weight Lbs (kg) ①	Weathershield	Catalog Number
15	2 at +2.5%	4 at –2.5%	DT-3	150	912D	280J	204 (93)	**WS38**	**V44M31T15EE**
30	2 at +2.5%	4 at –2.5%	DT-3	150	912D	280J	291 (132)	**WS38**	**V44M31T30EE**
45	2 at +2.5%	4 at –2.5%	DT-3	150	912D	280J	351 (159)	**WS38**	**V44M31T45EE**
75	2 at +2.5%	4 at –2.5%	DT-3	150	914F	280J	553 (251)	**WS39**	**V44M31T75EE**
112.5	2 at +2.5%	4 at –2.5%	DT-3	150	916A	280J	793 (360)	**WS19**	**V44M31T12EE**
150	2 at +2.5%	4 at –2.5%	DT-3	150	916A	280J	913 (415)	**WS19**	**V44M31T49EE**
225	2 at +2.5%	4 at –2.5%	DT-3	150	917	280J	1343 (610)	**WS34**	**V44M31T22EE**
300	2 at +2.5%	4 at –2.5%	DT-3	150	918A	275F	1597 (725)	**WS34**	**V44M31T33EE**
500	2 at +2.5%	4 at –2.5%	DT-3	150	919E	275F	2590 (1176)	**WS35**	**V44M31T55EE**
15	2 at +2.5%	4 at –2.5%	DT-3	115	912D	280J	202 (92)	**WS38**	**V44M31F15EE**
30	2 at +2.5%	4 at –2.5%	DT-3	115	912D	280J	311 (141)	**WS38**	**V44M31F30EE**
45	2 at +2.5%	4 at –2.5%	DT-3	115	912D	280J	418 (190)	**WS38**	**V44M31F45EE**
75	2 at +2.5%	4 at –2.5%	DT-3	115	914F	280J	581 (264)	**WS39**	**V44M31F75EE**
112.5	2 at +2.5%	4 at –2.5%	DT-3	115	916A	280J	829 (376)	**WS19**	**V44M31F12EE**
150	2 at +2.5%	4 at –2.5%	DT-3	115	916A	280J	996 (452)	**WS19**	**V44M31F49EE**
225	2 at +2.5%	4 at –2.5%	DT-3	115	918A	280J	1569 (712)	**WS34**	**V44M31F22EE**
300	2 at +2.5%	4 at –2.5%	DT-3	115	923	280J	1908 (866)	**WS37**	**V44M31F33EE**
500	2 at +2.5%	4 at –2.5%	DT-3	115	920E	275F	3117 (1415)	**WS35**	**V44M31F55EE**
15	2 at +2.5%	4 at –2.5%	DT-3	80	912D	280J	276 (125)	**WS38**	**V44M31B15EE**
30	2 at +2.5%	4 at –2.5%	DT-3	80	912D	280J	350 (159)	**WS38**	**V44M31B30EE**
45	2 at +2.5%	4 at –2.5%	DT-3	80	914F	280J	560 (254)	**WS39**	**V44M31B45EE**
75	2 at +2.5%	4 at –2.5%	DT-3	80	916A	280J	810 (368)	**WS19**	**V44M31B75EE**
112.5	2 at +2.5%	4 at –2.5%	DT-3	80	916A	280J	944 (429)	**WS19**	**V44M31B12EE**
150	2 at +2.5%	4 at –2.5%	DT-3	80	917	280J	1438 (653)	**WS34**	**V44M31B49EE**
225	2 at +2.5%	4 at –2.5%	DT-3	80	923	280J	1746 (793)	**WS37**	**V44M31B22EE**
300	2 at +2.5%	4 at –2.5%	DT-3	80	919E	275F	2400 (1090)	**WS35**	**V44M31B33EE**

Notes

① Weights subject to change.

Additional voltage combinations are available. Contact your local Eaton sales office for assistance if the voltage you require is not included in this catalog. For other ratings or catalog numbers not shown, or for special enclosure types (including stainless steel), refer to Eaton. Frame drawings/dimensions information begins on **Page V2-T2-216**.

Three-Phase—Type DT-3 60 Hz NEMA TP-1 Energy-Efficient—Aluminum Windings

480 Delta Volts to 208Y/120 Volts

kVA	Full Capacity Taps FCAN	FCBN	Type	°C Temp. Rise	Frame	Wiring Diagram Number	Weight Lbs (kg) ①	Weathershield	Catalog Number
15	2 at +2.5%	4 at –2.5%	DT-3	150	912D	280B	204 (93)	**WS38**	**V48M28T15EE**
30	2 at +2.5%	4 at –2.5%	DT-3	150	912D	280B	291 (132)	**WS38**	**V48M28T30EE**
37.5	2 at +2.5%	4 at –2.5%	DT-3	150	912D	280B	381 (173)	**WS38**	**V48M28T37EE**
45	2 at +2.5%	4 at –2.5%	DT-3	150	912D	280B	351 (159)	**WS38**	**V48M28T45EE**
50	2 at +2.5%	4 at –2.5%	DT-3	150	914F	280B	531 (241)	**WS39**	**V48M28T50EE**
75	2 at +2.5%	4 at –2.5%	DT-3	150	914F	280B	553 (251)	**WS39**	**V48M28T75EE**
112.5	2 at +2.5%	4 at –2.5%	DT-3	150	916A	280B	793 (360)	**WS19**	**V48M28T12EE**
150	2 at +2.5%	4 at –2.5%	DT-3	150	916A	280B	913 (415)	**WS19**	**V48M28T49EE**
225	2 at +2.5%	4 at –2.5%	DT-3	150	928	657B	1160 (527)	**WS41**	**V48M28T22EE**
300	2 at +2.5%	4 at –2.5%	DT-3	150	929	657B	1415 (642)	**WS42**	**V48M28T33EE**
500	2 at +2.5%	2 at –2.5%	DT-3	150	924	428B	2415 (1097)	**WS40**	**V48D28T55EE**
750	2 at +2.5%	4 at –2.5%	DT-3	150	920E	275A	3340 (1516)	**WS35**	**V48M28T77EE**
15	2 at +2.5%	4 at –2.5%	DT-3	115	912D	280B	202 (92)	**WS38**	**V48M28F15EE**
30	2 at +2.5%	4 at –2.5%	DT-3	115	912D	280B	311 (141)	**WS38**	**V48M28F30EE**
45	2 at +2.5%	4 at –2.5%	DT-3	115	912D	280B	418 (190)	**WS38**	**V48M28F45EE**
75	2 at +2.5%	4 at –2.5%	DT-3	115	914F	280B	581 (264)	**WS39**	**V48M28F75EE**
112.5	2 at +2.5%	4 at –2.5%	DT-3	115	916A	280B	829 (376)	**WS19**	**V48M28F12EE**
150	2 at +2.5%	4 at –2.5%	DT-3	115	916A	280B	996 (452)	**WS19**	**V48M28F49EE**
225	2 at +2.5%	4 at –2.5%	DT-3	115	918A	280B	1569 (712)	**WS34**	**V48M28F22EE**
300	2 at +2.5%	4 at –2.5%	DT-3	115	923	280B	1908 (866)	**WS37**	**V48M28F33EE**
500	2 at +2.5%	4 at –2.5%	DT-3	115	920E	275A	3117 (1415)	**WS35**	**V48M28F55EE**
15	2 at +2.5%	4 at –2.5%	DT-3	80	912D	280B	276 (125)	**WS38**	**V48M28B15EE**
30	2 at +2.5%	4 at –2.5%	DT-3	80	912D	280B	350 (159)	**WS38**	**V48M28B30EE**
45	2 at +2.5%	4 at –2.5%	DT-3	80	914F	280B	560 (254)	**WS39**	**V48M28B45EE**
75	2 at +2.5%	4 at –2.5%	DT-3	80	916A	280B	810 (368)	**WS19**	**V48M28B75EE**
112.5	2 at +2.5%	4 at –2.5%	DT-3	80	916A	280B	944 (429)	**WS19**	**V48M28B12EE**
150	2 at +2.5%	4 at –2.5%	DT-3	80	917	280B	1438 (653)	**WS34**	**V48M28B49EE**
225	2 at +2.5%	4 at –2.5%	DT-3	80	923	280B	1746 (793)	**WS37**	**V48M28B22EE**
300	2 at +2.5%	4 at –2.5%	DT-3	80	919E	275A	2400 (1090)	**WS35**	**V48M28B33EE**
500	2 at +2.5%	4 at –2.5%	DT-3	80	920E	275A	3418 (1552)	**WS35**	**V48M28B55EE**

Notes

① Weights subject to change.

Additional voltage combinations are available. Contact your local Eaton sales office for assistance if the voltage you require is not included in this catalog. For other ratings or catalog numbers not shown, or for special enclosure types (including stainless steel), refer to Eaton. Frame drawings/dimensions information begins on **Page V2-T2-216**.

Three-Phase—Type DT-3 60 Hz NEMA TP-1 Energy-Efficient—Aluminum Windings

480 Delta Volts to 240 Delta Volts with 120 Volt Lighting Tap on Phase B ①

kVA	Full Capacity Taps FCAN	FCBN	Type	°C Temp. Rise	Frame	Wiring Diagram Number	Weight Lbs (kg) ②	Weathershield	Catalog Number
15	2 at +2.5%	4 at –2.5%	DT-3	150	912D	282B	206 (94)	**WS38**	**V48M22T15EE**
30	2 at +2.5%	4 at –2.5%	DT-3	150	912D	282B	291 (132)	**WS38**	**V48M22T30EE**
45	2 at +2.5%	4 at –2.5%	DT-3	150	912D	282B	378 (172)	**WS38**	**V48M22T45EE**
75	2 at +2.5%	4 at –2.5%	DT-3	150	914F	282B	577 (262)	**WS39**	**V48M22T75EE**
112.5	2 at +2.5%	4 at –2.5%	DT-3	150	916A	282B	790 (359)	**WS19**	**V48M22T12EE**
150	2 at +2.5%	4 at –2.5%	DT-3	150	916A	282B	930 (422)	**WS19**	**V48M22T49EE**
225	2 at +2.5%	4 at –2.5%	DT-3	150	917	291A	1476 (670)	**WS34**	**V48M22T22EE**
300	2 at +2.5%	4 at –2.5%	DT-3	150	923	291A	1898 (862)	**WS37**	**V48M22T33EE**
500	2 at +2.5%	4 at –2.5%	DT-3	150	919E	291A	2590 (1176)	**WS35**	**V48M22T55EE**
15	2 at +2.5%	4 at –2.5%	DT-3	115	912D	282B	206 (94)	**WS38**	**V48M22F15EE**
30	2 at +2.5%	4 at –2.5%	DT-3	115	912D	282B	311 (141)	**WS38**	**V48M22F30EE**
45	2 at +2.5%	4 at –2.5%	DT-3	115	912D	282B	418 (190)	**WS38**	**V48M22F45EE**
75	2 at +2.5%	4 at –2.5%	DT-3	115	914F	282B	581 (264)	**WS39**	**V48M22F75EE**
112.5	2 at +2.5%	4 at –2.5%	DT-3	115	916A	282B	829 (376)	**WS19**	**V48M22F12EE**
150	2 at +2.5%	4 at –2.5%	DT-3	115	916A	282B	1022 (464)	**WS19**	**V48M22F49EE**
225	2 at +2.5%	4 at –2.5%	DT-3	115	918A	282B	1565 (711)	**WS34**	**V48M22F22EE**
300	2 at +2.5%	4 at –2.5%	DT-3	115	923	282B	1795 (815)	**WS37**	**V48M22F33EE**
500	2 at +2.5%	4 at –2.5%	DT-3	115	920E	291A	3120 (1416)	**WS35**	**V48M22F55EE**
15	2 at +2.5%	4 at –2.5%	DT-3	80	912D	282B	278 (126)	**WS38**	**V48M22B15EE**
30	2 at +2.5%	4 at –2.5%	DT-3	80	912D	282B	383 (174)	**WS38**	**V48M22B30EE**
45	2 at +2.5%	4 at –2.5%	DT-3	80	914F	282B	560 (254)	**WS39**	**V48M22B45EE**
75	2 at +2.5%	4 at –2.5%	DT-3	80	916A	282B	810 (368)	**WS19**	**V48M22B75EE**
112.5	2 at +2.5%	4 at –2.5%	DT-3	80	916A	282B	959 (435)	**WS19**	**V48M22B12EE**
150	2 at +2.5%	4 at –2.5%	DT-3	80	917	282B	1287 (584)	**WS34**	**V48M22B49EE**
225	2 at +2.5%	4 at –2.5%	DT-3	80	923	282B	1746 (793)	**WS37**	**V48M22B22EE**
300	2 at +2.5%	4 at –2.5%	DT-3	80	919E	291A	2400 (1090)	**WS35**	**V48M22B33EE**

Notes

① Lighting tap limited to 5% of nameplate full load capacity.

② Weights subject to change.

Additional voltage combinations are available. Contact your local Eaton sales office for assistance if the voltage you require is not included in this catalog. For other ratings or catalog numbers not shown, or for special enclosure types (including stainless steel), refer to Eaton. Frame drawings/dimensions information begins on **Page V2-T2-216**.

Three-Phase—Type DT-3 60 Hz NEMA TP-1 Energy-Efficient—Aluminum Windings

480 Delta Volts to 480Y/277 Volts

kVA	Full Capacity Taps FCAN	FCBN	Type	°C Temp. Rise	Frame	Wiring Diagram Number	Weight Lbs (kg) ①	Weathershield	Catalog Number
15	2 at +2.5%	4 at –2.5%	DT-3	150	912D	280B	206 (94)	**WS38**	**V48M47T15EE**
30	2 at +2.5%	4 at –2.5%	DT-3	150	912D	280B	281 (128)	**WS38**	**V48M47T30EE**
45	2 at +2.5%	4 at –2.5%	DT-3	150	912D	280B	380 (173)	**WS38**	**V48M47T45EE**
75	2 at +2.5%	4 at –2.5%	DT-3	150	914F	280B	565 (257)	**WS39**	**V48M47T75EE**
112.5	2 at +2.5%	4 at –2.5%	DT-3	150	916A	280B	783 (355)	**WS19**	**V48M47T12EE**
150	2 at +2.5%	4 at –2.5%	DT-3	150	916A	280B	945 (429)	**WS19**	**V48M47T49EE**
225	2 at +2.5%	4 at –2.5%	DT-3	150	917	280B	1413 (642)	**WS34**	**V48M47T22EE**
300	2 at +2.5%	4 at –2.5%	DT-3	150	918A	275A	1910 (867)	**WS34**	**V48M47T33EE**
500	2 at +2.5%	4 at –2.5%	DT-3	150	919E	275A	2673 (1214)	**WS35**	**V48M47T55EE**
15	2 at +2.5%	4 at –2.5%	DT-3	115	912D	280B	240 (109)	**WS38**	**V48M47F15EE**
30	2 at +2.5%	4 at –2.5%	DT-3	115	912D	280B	316 (143)	**WS38**	**V48M47F30EE**
45	2 at +2.5%	4 at –2.5%	DT-3	115	912D	280B	384 (174)	**WS38**	**V48M47F45EE**
75	2 at +2.5%	4 at –2.5%	DT-3	115	914F	280B	670 (304)	**WS39**	**V48M47F75EE**
112.5	2 at +2.5%	4 at –2.5%	DT-3	115	916A	280B	853 (387)	**WS19**	**V48M47F12EE**
150	2 at +2.5%	4 at –2.5%	DT-3	115	916A	280B	982 (446)	**WS19**	**V48M47F49EE**
225	2 at +2.5%	4 at –2.5%	DT-3	115	918A	280B	1559 (708)	**WS34**	**V48M47F22EE**
300	2 at +2.5%	4 at –2.5%	DT-3	115	923	280B	1795 (815)	**WS37**	**V48M47F33EE**
500	2 at +2.5%	4 at –2.5%	DT-3	115	920E	275A	3120 (1416)	**WS35**	**V48M47F55EE**
15	2 at +2.5%	4 at –2.5%	DT-3	80	912D	280B	271 (123)	**WS38**	**V48M47B15EE**
30	2 at +2.5%	4 at –2.5%	DT-3	80	912D	280B	360 (163)	**WS38**	**V48M47B30EE**
45	2 at +2.5%	4 at –2.5%	DT-3	80	914F	280B	563 (256)	**WS39**	**V48M47B45EE**
75	2 at +2.5%	4 at –2.5%	DT-3	80	916A	280B	773 (351)	**WS19**	**V48M47B75EE**
112.5	2 at +2.5%	4 at –2.5%	DT-3	80	916A	280B	954 (433)	**WS19**	**V48M47B12EE**
150	2 at +2.5%	4 at –2.5%	DT-3	80	917	280B	1330 (604)	**WS34**	**V48M47B49EE**
225	2 at +2.5%	4 at –2.5%	DT-3	80	923	280B	1827 (829)	**WS37**	**V48M47B22EE**
300	2 at +2.5%	4 at –2.5%	DT-3	80	919E	275A	2540 (1153)	**WS35**	**V48M47B33EE**

Notes

① Weights subject to change.

Additional voltage combinations are available. Contact your local Eaton sales office for assistance if the voltage you require is not included in this catalog. For other ratings or catalog numbers not shown, or for special enclosure types (including stainless steel), refer to Eaton. Frame drawings/dimensions information begins on **Page V2-T2-216**.

Three-Phase—Type DT-3 60 Hz NEMA TP-1 Energy-Efficient—Aluminum Windings

600 Delta Volts to 208Y/120 Volts

kVA	Full Capacity Taps FCAN	FCBN	Type	°C Temp. Rise	Frame	Wiring Diagram Number	Weight Lbs (kg) ①	Weathershield	Catalog Number
15	2 at +2.5%	4 at –2.5%	DT-3	150	912D	280A	231 (105)	**WS38**	**V60M28T15EE**
30	2 at +2.5%	4 at –2.5%	DT-3	150	912D	280A	309 (140)	**WS38**	**V60M28T30EE**
45	2 at +2.5%	4 at –2.5%	DT-3	150	912D	280A	375 (170)	**WS38**	**V60M28T45EE**
75	2 at +2.5%	4 at –2.5%	DT-3	150	914F	280A	572 (260)	**WS39**	**V60M28T75EE**
112.5	2 at +2.5%	4 at –2.5%	DT-3	150	916A	280A	801 (364)	**WS19**	**V60M28T12EE**
150	2 at +2.5%	4 at –2.5%	DT-3	150	917	280A	1013 (460)	**WS34**	**V60M28T49EE**
225	2 at +2.5%	4 at –2.5%	DT-3	150	918A	280A	1523 (691)	**WS34**	**V60M28T22EE**
300	2 at +2.5%	4 at –2.5%	DT-3	150	919E	280A	1697 (770)	**WS35**	**V60M28T33EE**
500	2 at +2.5%	4 at –2.5%	DT-3	150	920E	280A	2690 (1221)	**WS35**	**V60M28T55EE**
15	2 at +2.5%	4 at –2.5%	DT-3	115	912D	280A	240 (109)	**WS38**	**V60M28F15EE**
30	2 at +2.5%	4 at –2.5%	DT-3	115	912D	280A	320 (145)	**WS38**	**V60M28F30EE**
45	2 at +2.5%	4 at –2.5%	DT-3	115	912D	280A	396 (180)	**WS38**	**V60M28F45EE**
75	2 at +2.5%	4 at –2.5%	DT-3	115	914F	280A	607 (276)	**WS39**	**V60M28F75EE**
112.5	2 at +2.5%	4 at –2.5%	DT-3	115	916A	280A	960 (436)	**WS19**	**V60M28F12EE**
150	2 at +2.5%	4 at –2.5%	DT-3	115	916A	280A	1060 (481)	**WS19**	**V60M28F49EE**
225	2 at +2.5%	4 at –2.5%	DT-3	115	918A	280A	1500 (681)	**WS34**	**V60M28F22EE**
300	2 at +2.5%	4 at –2.5%	DT-3	115	919E	280A	1800 (817)	**WS35**	**V60M28F33EE**
500	2 at +2.5%	4 at –2.5%	DT-3	115	920E	280A	2900 (1317)	**WS35**	**V60M28F55EE**
15	2 at +2.5%	4 at –2.5%	DT-3	80	912D	280A	280 (127)	**WS38**	**V60M28B15EE**
30	2 at +2.5%	4 at –2.5%	DT-3	80	912D	280A	350 (159)	**WS38**	**V60M28B30EE**
45	2 at +2.5%	4 at –2.5%	DT-3	80	914F	280A	560 (254)	**WS39**	**V60M28B45EE**
75	2 at +2.5%	4 at –2.5%	DT-3	80	916A	280A	810 (368)	**WS19**	**V60M28B75EE**
112.5	2 at +2.5%	4 at –2.5%	DT-3	80	916A	280A	950 (431)	**WS19**	**V60M28B12EE**
150	2 at +2.5%	4 at –2.5%	DT-3	80	917	280A	1430 (649)	**WS34**	**V60M28B49EE**
225	2 at +2.5%	4 at –2.5%	DT-3	80	919E	280A	1750 (795)	**WS35**	**V60M28B22EE**
300	2 at +2.5%	4 at –2.5%	DT-3	80	919E	280A	2400 (1090)	**WS35**	**V60M28B33EE**

Notes

① Weights subject to change.

For other ratings or catalog numbers not shown, or for special enclosure types (including stainless steel), refer to Eaton. Frame drawings/dimensions information begins on **Page V2-T2-216**.

Three-Phase—Type DT-3 60 Hz NEMA TP-1 Energy-Efficient—Aluminum Windings

600 Delta Volts to 240 Delta Volts with 120 Volt Lighting Tap on Phase B ①

kVA	Full Capacity Taps FCAN	FCBN	Type	°C Temp. Rise	Frame	Wiring Diagram Number	Weight Lbs (kg) ②	Weathershield	Catalog Number
15	2 at +2.5%	4 at –2.5%	DT-3	150	912D	282A	245 (111)	**WS38**	**V60M22T15EE**
30	2 at +2.5%	4 at –2.5%	DT-3	150	912D	282A	313 (142)	**WS38**	**V60M22T30EE**
45	2 at +2.5%	4 at –2.5%	DT-3	150	912D	282A	403 (183)	**WS38**	**V60M22T45EE**
75	2 at +2.5%	4 at –2.5%	DT-3	150	914F	282A	577 (262)	**WS39**	**V60M22T75EE**
112.5	2 at +2.5%	4 at –2.5%	DT-3	150	916A	282A	790 (359)	**WS19**	**V60M22T12EE**
150	2 at +2.5%	4 at –2.5%	DT-3	150	917	282A	1001 (454)	**WS34**	**V60M22T49EE**
225	2 at +2.5%	4 at –2.5%	DT-3	150	918A	282A	1476 (670)	**WS34**	**V60M22T22EE**
300	2 at +2.5%	4 at –2.5%	DT-3	150	919E	282A	1898 (862)	**WS35**	**V60M22T33EE**
500	2 at +2.5%	4 at –2.5%	DT-3	150	920E	282A	2590 (1176)	**WS35**	**V60M22T55EE**
15	2 at +2.5%	4 at –2.5%	DT-3	115	912D	282A	206 (94)	**WS38**	**V60M22F15EE**
30	2 at +2.5%	4 at –2.5%	DT-3	115	912D	282A	311 (141)	**WS38**	**V60M22F30EE**
45	2 at +2.5%	4 at –2.5%	DT-3	115	912D	282A	418 (190)	**WS38**	**V60M22F45EE**
75	2 at +2.5%	4 at –2.5%	DT-3	115	914F	282A	581 (264)	**WS39**	**V60M22F75EE**
112.5	2 at +2.5%	4 at –2.5%	DT-3	115	916A	282A	829 (376)	**WS19**	**V60M22F12EE**
150	2 at +2.5%	4 at –2.5%	DT-3	115	916A	282A	1022 (464)	**WS19**	**V60M22F49EE**
225	2 at +2.5%	4 at –2.5%	DT-3	115	918A	282A	1565 (711)	**WS34**	**V60M22F22EE**
300	2 at +2.5%	4 at –2.5%	DT-3	115	919E	282A	1795 (815)	**WS35**	**V60M22F33EE**
500	2 at +2.5%	4 at –2.5%	DT-3	115	920E	282A	3120 (1416)	**WS35**	**V60M22F55EE**
15	2 at +2.5%	4 at –2.5%	DT-3	80	912D	282A	278 (126)	**WS38**	**V60M22B15EE**
30	2 at +2.5%	4 at –2.5%	DT-3	80	912D	282A	383 (174)	**WS38**	**V60M22B30EE**
45	2 at +2.5%	4 at –2.5%	DT-3	80	914F	282A	560 (254)	**WS39**	**V60M22B45EE**
75	2 at +2.5%	4 at –2.5%	DT-3	80	916A	282A	810 (368)	**WS19**	**V60M22B75EE**
112.5	2 at +2.5%	4 at –2.5%	DT-3	80	916A	282A	959 (435)	**WS19**	**V60M22B12EE**
150	2 at +2.5%	4 at –2.5%	DT-3	80	917	282A	1287 (584)	**WS34**	**V60M22B49EE**
225	2 at +2.5%	4 at –2.5%	DT-3	80	919E	282A	1746 (793)	**WS35**	**V60M22B22EE**
300	2 at +2.5%	4 at –2.5%	DT-3	80	919E	282A	2400 (1090)	**WS35**	**V60M22B33EE**

Notes

① Lighting tap limited to 5% of nameplate full load capacity.

② Weights subject to change.

For other ratings or catalog numbers not shown, or for special enclosure types (including stainless steel), refer to Eaton. Frame drawings/dimensions information begins on **Page V2-T2-216**.

Three-Phase—Type DT-3 60 Hz NEMA TP-1 Energy-Efficient—Aluminum Windings

600 Delta Volts to 480Y/277 Volts

kVA	Full Capacity Taps FCAN	FCBN	Type	°C Temp. Rise	Frame	Wiring Diagram Number	Weight Lbs (kg) ①	Weathershield	Catalog Number
15	2 at +2.5%	4 at –2.5%	DT-3	150	912D	280A	206 (94)	**WS38**	**V60M47T15EE**
30	2 at +2.5%	4 at –2.5%	DT-3	150	912D	280A	291 (132)	**WS38**	**V60M47T30EE**
45	2 at +2.5%	4 at –2.5%	DT-3	150	912D	280A	382 (173)	**WS38**	**V60M47T45EE**
75	2 at +2.5%	4 at –2.5%	DT-3	150	914F	280A	578 (262)	**WS39**	**V60M47T75EE**
112.5	2 at +2.5%	4 at –2.5%	DT-3	150	916A	280A	811 (368)	**WS19**	**V60M47T12EE**
150	2 at +2.5%	4 at –2.5%	DT-3	150	916A	280A	934 (424)	**WS19**	**V60M47T49EE**
225	2 at +2.5%	4 at –2.5%	DT-3	150	917	280A	1569 (712)	**WS34**	**V60M47T22EE**
300	2 at +2.5%	4 at –2.5%	DT-3	150	923	280A	1997 (907)	**WS37**	**V60M47T33EE**
500	2 at +2.5%	4 at –2.5%	DT-3	150	919E	275C	2641 (1199)	**WS35**	**V60M47T55EE**
15	2 at +2.5%	4 at –2.5%	DT-3	115	912D	280A	206 (94)	**WS38**	**V60M47F15EE**
30	2 at +2.5%	4 at –2.5%	DT-3	115	912D	280A	311 (141)	**WS38**	**V60M47F30EE**
45	2 at +2.5%	4 at –2.5%	DT-3	115	912D	280A	418 (190)	**WS38**	**V60M47F45EE**
75	2 at +2.5%	4 at –2.5%	DT-3	115	914F	280A	581 (264)	**WS39**	**V60M47F75EE**
112.5	2 at +2.5%	4 at –2.5%	DT-3	115	916A	280A	829 (376)	**WS19**	**V60M47F12EE**
150	2 at +2.5%	4 at –2.5%	DT-3	115	916A	280A	1022 (464)	**WS19**	**V60M47F49EE**
225	2 at +2.5%	4 at –2.5%	DT-3	115	917	280A	1565 (7101)	**WS34**	**V60M47F22EE**
300	2 at +2.5%	4 at –2.5%	DT-3	115	923	280A	1795 (815)	**WS37**	**V60M47F33EE**
500	2 at +2.5%	4 at –2.5%	DT-3	115	919E	275C	3120 (1416)	**WS35**	**V60M47F55EE**
15	2 at +2.5%	4 at –2.5%	DT-3	80	912D	280A	278 (126)	**WS38**	**V60M47B15EE**
30	2 at +2.5%	4 at –2.5%	DT-3	80	912D	280A	383 (174)	**WS38**	**V60M47B30EE**
45	2 at +2.5%	4 at –2.5%	DT-3	80	914F	280A	560 (254)	**WS39**	**V60M47B45EE**
75	2 at +2.5%	4 at –2.5%	DT-3	80	916A	280A	810 (368)	**WS19**	**V60M47B75EE**
112.5	2 at +2.5%	4 at –2.5%	DT-3	80	916A	280A	959 (435)	**WS19**	**V60M47B12EE**
150	2 at +2.5%	4 at –2.5%	DT-3	80	917	280A	1287 (584)	**WS34**	**V60M47B49EE**
225	2 at +2.5%	4 at –2.5%	DT-3	80	923	280A	1746 (793)	**WS37**	**V60M47B22EE**
300	2 at +2.5%	4 at –2.5%	DT-3	80	919E	275C	2650 (1203)	**WS35**	**V60M47B33EE**

Notes

① Weights subject to change.

For other ratings or catalog numbers not shown, or for special enclosure types (including stainless steel), refer to Eaton. Frame drawings/dimensions information begins on **Page V2-T2-216**.

Three-Phase—Type DT-3 60 Hz NEMA TP-1 Energy-Efficient—Copper Windings

208 Delta Volts to 208Y/120 Volts

kVA	Full Capacity Taps FCAN	FCBN	Type	°C Temp. Rise	Frame	Wiring Diagram Number	Weight Lbs (kg) ①	Weathershield	Catalog Number
15	2 at +2.5%	4 at –2.5%	DT-3	150	912D	—	236 (107)	**WS38**	**V29M28T15CUEE**
30	2 at +2.5%	4 at –2.5%	DT-3	150	912D	—	351 (159)	**WS38**	**V29M28T30CUEE**
45	2 at +2.5%	4 at –2.5%	DT-3	150	912D	—	453 (206)	**WS38**	**V29M28T45CUEE**
75	2 at +2.5%	4 at –2.5%	DT-3	150	914F	—	687 (312)	**WS39**	**V29M28T75CUEE**
112.5	1 at +5%	2 at –5%	DT-3	150	916A	—	930 (422)	**WS19**	**V29R28T12CUEE**
150	1 at +5%	2 at –5%	DT-3	150	916A	—	1242 (564)	**WS19**	**V29R28T49CUEE**
225	1 at +5%	2 at –5%	DT-3	150	917	—	1763 (800)	**WS34**	**V29R28T22CUEE**
300	1 at +5%	2 at –5%	DT-3	150	918A	—	2300 (1044)	**WS34**	**V29R28T33CUEE**
500	1 at +5%	2 at –5%	DT-3	150	919E	—	3590 (1630)	**WS35**	**V29R28T55CUEE**
15	2 at +2.5%	4 at –2.5%	DT-3	115	912D	—	265 (120)	**WS38**	**V29M28F15CUEE**
30	2 at +2.5%	4 at –2.5%	DT-3	115	912D	—	475 (215)	**WS38**	**V29M28F30CUEE**
45	2 at +2.5%	4 at –2.5%	DT-3	115	912D	—	475 (216)	**WS38**	**V29M28F45CUEE**
75	2 at +2.5%	4 at –2.5%	DT-3	115	914F	—	700 (318)	**WS39**	**V29M28F75CUEE**
112.5	1 at +5%	2 at –5%	DT-3	115	916A	—	935 (424)	**WS19**	**V29R28F12CUEE**
150	1 at +5%	2 at –5%	DT-3	115	916A	—	1274 (578)	**WS19**	**V29R28F49CUEE**
225	1 at +5%	2 at –5%	DT-3	115	917	—	1743 (791)	**WS34**	**V29R28F22CUEE**
300	1 at +5%	2 at –5%	DT-3	115	919E	—	2350 (1067)	**WS35**	**V29R28F33CUEE**
500	1 at +5%	2 at –5%	DT-3	115	920E	—	3690 (1675)	**WS35**	**V29R28F55CUEE**
15	2 at +2.5%	4 at –2.5%	DT-3	80	912D	—	381 (173)	**WS38**	**V29M28B15CUEE**
30	2 at +2.5%	4 at –2.5%	DT-3	80	912D	—	420 (191)	**WS38**	**V29M28B30CUEE**
45	2 at +2.5%	4 at –2.5%	DT-3	80	912D	—	510 (232)	**WS38**	**V29M28B45CUEE**
75	2 at +2.5%	4 at –2.5%	DT-3	80	914F	—	940 (427)	**WS39**	**V29M28B75CUEE**
112.5	2 at +2.5%	4 at –2.5%	DT-3	80	916A	—	1300 (590)	**WS19**	**V29M28B12CUEE**
150	1 at +5%	2 at –5%	DT-3	80	918A	—	1800 (817)	**WS34**	**V29R28B49CUEE**
225	1 at +5%	2 at –5%	DT-3	80	919E	—	2400 (1090)	**WS35**	**V29R28B22CUEE**
300	1 at +5%	2 at –5%	DT-3	80	920E	—	3800 (1725)	**WS35**	**V29R28B33CUEE**

Notes

① Weights subject to change.

For other ratings or catalog numbers not shown, or for special enclosure types (including stainless steel), refer to Eaton. Frame drawings/dimensions information begins on **Page V2-T2-216**.

Three-Phase—Type DT-3 60 Hz NEMA TP-1 Energy-Efficient—Copper Windings

208 Delta Volts to 480Y/277 Volts

kVA	Full Capacity Taps FCAN	FCBN	Type	°C Temp. Rise	Frame	Wiring Diagram Number	Weight Lbs (kg) ①	Weathershield	Catalog Number
15	2 at +2.5%	4 at –2.5%	DT-3	150	912D	342B	236 (107)	**WS38**	**V29M47T15CUEE**
30	2 at +2.5%	4 at –2.5%	DT-3	150	912D	342B	351 (159)	**WS38**	**V29M47T30CUEE**
45	2 at +2.5%	4 at –2.5%	DT-3	150	912D	342B	453 (206)	**WS38**	**V29M47T45CUEE**
75	2 at +2.5%	4 at –2.5%	DT-3	150	914F	342B	687 (312)	**WS39**	**V29M47T75CUEE**
112.5	2 at +2.5%	4 at –2.5%	DT-3	150	916A	351A	930 (422)	**WS19**	**V29R47T12CUEE**
150	1 at +5%	2 at –5%	DT-3	150	916A	351A	1242 (564)	**WS19**	**V29R47T49CUEE**
225	1 at +5%	2 at –5%	DT-3	150	917	333B	1763 (800)	**WS34**	**V29R47T22CUEE**
300	1 at +5%	2 at –5%	DT-3	150	918A	333B	2300 (1044	**WS34**	**V29R47T33CUEE**
500	1 at +5%	2 at –5%	DT-3	150	919E	333B	3590 (1630)	**WS35**	**V29R47T55CUEE**
15	2 at +2.5%	4 at –2.5%	DT-3	115	912D	342B	265 (120)	**WS38**	**V29M47F15CUEE**
30	2 at +2.5%	4 at –2.5%	DT-3	115	912D	342B	474.6 (215)	**WS38**	**V29M47F30CUEE**
45	2 at +2.5%	4 at –2.5%	DT-3	115	912D	342B	475 (216)	**WS38**	**V29M47F45CUEE**
75	2 at +2.5%	4 at –2.5%	DT-3	115	914F	342B	700 (318)	**WS39**	**V29M47F75CUEE**
112.5	2 at +2.5%	4 at –2.5%	DT-3	115	916A	342B	935 (424)	**WS19**	**V29M47F12CUEE**
150	1 at +5%	2 at –5%	DT-3	115	916A	351A	1274 (578)	**WS19**	**V29R47F49CUEE**
225	1 at +5%	2 at –5%	DT-3	115	917	333B	1743 (791)	**WS34**	**V29R47F22CUEE**
300	1 at +5%	2 at –5%	DT-3	115	919E	333B	2350 (1067)	**WS35**	**V29R47F33CUEE**
500	1 at +5%	2 at –5%	DT-3	115	920E	333B	3690 (1675)	**WS35**	**V29R47F55CUEE**
15	2 at +2.5%	4 at –2.5%	DT-3	80	912D	342B	381 (173)	**WS38**	**V29M47B15CUEE**
30	2 at +2.5%	4 at –2.5%	DT-3	80	912D	342B	420 (191)	**WS38**	**V29M47B30CUEE**
45	2 at +2.5%	4 at –2.5%	DT-3	80	912D	342B	510 (232)	**WS38**	**V29M47B45CUEE**
75	1 at +5%	2 at –5%	DT-3	80	914F	342B	940 (427)	**WS39**	**V29R47B75CUEE**
112.5	1 at +5%	2 at –5%	DT-3	80	916A	342B	1300 (590)	**WS19**	**V29R47B12CUEE**
150	1 at +5%	2 at –5%	DT-3	80	918A	342B	1800 (817)	**WS34**	**V29R47B49CUEE**
225	1 at +5%	2 at –5%	DT-3	80	919E	333B	2400 (1090)	**WS35**	**V29R47B22CUEE**
300	1 at +5%	2 at –5%	DT-3	80	920E	333B	3800 (1725)	**WS35**	**V29R47B33CUEE**

Notes

① Weights subject to change.

For other ratings or catalog numbers not shown, or for special enclosure types (including stainless steel), refer to Eaton. Frame drawings/dimensions information begins on **Page V2-T2-216**.

Three-Phase—Type DT-3 60 Hz NEMA TP-1 Energy-Efficient—Copper Windings

240 Delta Volts to 208Y/120 Volts

kVA	Full Capacity Taps FCAN	FCBN	Type	°C Temp. Rise	Frame	Wiring Diagram Number	Weight Lbs (kg) ①	Weathershield	Catalog Number
15	2 at +2.5%	4 at –2.5%	DT-3	150	912D	280C	246 (112)	—	**V24M28T15CUEE**
30	2 at +2.5%	4 at –2.5%	DT-3	150	912D	280C	331 (150)	—	**V24M28T30CUEE**
45	2 at +2.5%	4 at –2.5%	DT-3	150	912D	280C	289 (131)	—	**V24M28T45CUEE**
75	2 at +2.5%	4 at –2.5%	DT-3	150	914F	280C	664 (301)	—	**V24M28T75CUEE**
112.5	2 at +2.5%	4 at –2.5%	DT-3	150	916A	280C	—	—	**V24M28T12CUEE**
150	2 at +2.5%	4 at –2.5%	DT-3	150	916A	280C	1130 (513)	—	**V24M28T49CUEE**
225	1 at +5%	2 at –5%	DT-3	150	—	—	—	—	**V24R28T22CUEE**
300	1 at +5%	2 at –5%	DT-3	150	—	—	—	—	**V24R28T33CUEE**
500	1 at +5%	2 at –5%	DT-3	150	—	—	—	—	**V24R28T55CUEE**
15	2 at +2.5%	4 at –2.5%	DT-3	115	912D	—	—	—	**V24M28F15CUEE**
30	2 at +2.5%	4 at –2.5%	DT-3	115	912D	—	—	—	**V24M28F30CUEE**
45	2 at +2.5%	4 at –2.5%	DT-3	115	—	—	—	—	**V24M28F45CUEE**
75	2 at +2.5%	4 at –2.5%	DT-3	115	914F	280C	680 (308)	—	**V24M28F75CUEE**
112.5	2 at +2.5%	4 at –2.5%	DT-3	115	—	—	—	—	**V24M28F12CUEE**
150	1 at +5%	2 at –5%	DT-3	115	—	—	—	—	**V24R28F49CUEE**
225	1 at +5%	2 at –5%	DT-3	115	—	—	—	—	**V24R28F22CUEE**
300	1 at +5%	2 at –5%	DT-3	115	—	—	—	—	**V24R28F33CUEE**
500	1 at +5%	2 at –5%	DT-3	115	—	—	—	—	**V24R28F55CUEE**
15	2 at +2.5%	4 at –2.5%	DT-3	80	912D	280C	346 (157)	—	**V24M28B15CUEE**
30	2 at +2.5%	4 at –2.5%	DT-3	80	—	—	—	—	**V24M28B30CUEE**
45	2 at +2.5%	4 at –2.5%	DT-3	80	—	—	—	—	**V24M28B45CUEE**
75	2 at +2.5%	4 at –2.5%	DT-3	80	—	—	—	—	**V24M28B75CUEE**
112.5	1 at +5%	2 at –5%	DT-3	80	—	—	—	—	**V24R28B12CUEE**
150	1 at +5%	2 at –5%	DT-3	80	917	289A	1774 (805)	—	**V24R28B49CUEE**
225	1 at +5%	2 at –5%	DT-3	80	—	—	—	—	**V24R28B22CUEE**
300	1 at +5%	2 at –5%	DT-3	80	—	—	—	—	**V24R28B33CUEE**

Notes

① Weights subject to change.

For other ratings or catalog numbers not shown, or for special enclosure types (including stainless steel), refer to Eaton. Frame drawings/dimensions information begins on **Page V2-T2-216**.

Three-Phase—Type DT-3 60 Hz NEMA TP-1 Energy-Efficient—Copper Windings

240 Delta Volts to 480Y/277 Volts

kVA	Full Capacity Taps FCAN	FCBN	Type	°C Temp. Rise	Frame	Wiring Diagram Number	Weight Lbs (kg) ①	Weathershield	Catalog Number
15	2 at +2.5%	4 at –2.5%	DT-3	150	912D	342L	341 (155)	—	**V24M47T15CUEE**
30	2 at +2.5%	4 at –2.5%	DT-3	150	912D	342L	436 (198)	—	**V24M47T30CUEE**
45	2 at +2.5%	4 at –2.5%	DT-3	150	914F	342L	685 (311)	—	**V24M47T45CUEE**
75	2 at +2.5%	4 at –2.5%	DT-3	150	916A	342L	—	—	**V24M47T75CUEE**
112.5	2 at +2.5%	4 at –2.5%	DT-3	150	—	—	—	—	**V24M47T12CUEE**
150	2 at +2.5%	4 at –2.5%	DT-3	150	—	—	—	—	**V24M47T49CUEE**
225	1 at +5%	2 at –5%	DT-3	150	—	—	—	—	**V24R47T22CUEE**
300	1 at +5%	2 at –5%	DT-3	150	—	—	—	—	**V24R47T33CUEE**
500	1 at +5%	2 at –5%	DT-3	150	—	—	—	—	**V24R47T55CUEE**
15	2 at +2.5%	4 at –2.5%	DT-3	115	912D	—	—	—	**V24M47F15CUEE**
30	2 at +2.5%	4 at –2.5%	DT-3	115	—	—	—	—	**V24M47F30CUEE**
45	2 at +2.5%	4 at –2.5%	DT-3	115	—	—	—	—	**V24M47F45CUEE**
75	2 at +2.5%	4 at –2.5%	DT-3	115	—	—	—	—	**V24M47F75CUEE**
112.5	1 at +5%	2 at –5%	DT-3	115	916A	351C	1009 (458)	—	**V24R47F12CUEE**
150	1 at +5%	2 at –5%	DT-3	115	—	—	—	—	**V24R47F49CUEE**
225	1 at +5%	2 at –5%	DT-3	115	—	—	—	—	**V24R47F22CUEE**
300	1 at +5%	2 at –5%	DT-3	115	—	—	—	—	**V24R47F33CUEE**
500	1 at +5%	2 at –5%	DT-3	115	—	—	—	—	**V24R47F55CUEE**
15	2 at +2.5%	4 at –2.5%	DT-3	80	912D	—	—	—	**V24M47B15CUEE**
30	2 at +2.5%	4 at –2.5%	DT-3	80	—	—	—	—	**V24M47B30CUEE**
45	2 at +2.5%	4 at –2.5%	DT-3	80	—	—	—	—	**V24M47B45CUEE**
75	2 at +2.5%	4 at –2.5%	DT-3	80	—	—	—	—	**V24M47B75CUEE**
112.5	1 at +5%	2 at –5%	DT-3	80	—	—	—	—	**V24R47B12CUEE**
150	1 at +5%	2 at –5%	DT-3	80	—	—	—	—	**V24R47B49CUEE**
225	1 at +5%	2 at –5%	DT-3	80	—	—	—	—	**V24R47B22CUEE**
300	1 at +5%	2 at –5%	DT-3	80	—	—	—	—	**V24R47B33CUEE**

Notes

① Weights subject to change.

For other ratings or catalog numbers not shown, or for special enclosure types (including stainless steel), refer to Eaton. Frame drawings/dimensions information begins on **Page V2-T2-216**.

Three-Phase—Type DT-3 60 Hz NEMA TP-1 Energy-Efficient—Copper Windings

440 Delta Volts to 220Y/127 Volts

kVA	Full Capacity Taps FCAN	FCBN	Type	°C Temp. Rise	Frame	Wiring Diagram Number	Weight Lbs (kg) ①	Weathershield	Catalog Number
15	2 at +2.5%	4 at –2.5%	DT-3	150	912D	280J	250 (114)	**WS38**	**V44M31T15CUEE**
30	2 at +2.5%	4 at –2.5%	DT-3	150	912D	280J	350 (159)	**WS38**	**V44M31T30CUEE**
45	2 at +2.5%	4 at –2.5%	DT-3	150	912D	280J	416 (189)	**WS38**	**V44M31T45CUEE**
75	2 at +2.5%	4 at –2.5%	DT-3	150	914F	280J	643 (292)	**WS39**	**V44M31T75CUEE**
112.5	2 at +2.5%	4 at –2.5%	DT-3	150	916A	280J	876 (398)	**WS19**	**V44M31T12CUEE**
150	2 at +2.5%	4 at –2.5%	DT-3	150	916A	280J	1064 (483)	**WS19**	**V44M31T49CUEE**
225	2 at +2.5%	4 at –2.5%	DT-3	150	917	280J	1545 (701)	**WS34**	**V44M31T22CUEE**
300	2 at +2.5%	4 at –2.5%	DT-3	150	923	275F	2050 (931)	**WS37**	**V44M31T33CUEE**
500	2 at +2.5%	4 at –2.5%	DT-3	150	919E	275F	3681 (1671)	**WS35**	**V44M31T55CUEE**
15	2 at +2.5%	4 at –2.5%	DT-3	115	912D	280J	256 (116)	**WS38**	**V44M31F15CUEE**
30	2 at +2.5%	4 at –2.5%	DT-3	115	912D	280J	337 (153)	**WS38**	**V44M31F30CUEE**
45	2 at +2.5%	4 at –2.5%	DT-3	115	912D	280J	446 (202)	**WS38**	**V44M31F45CUEE**
75	2 at +2.5%	4 at –2.5%	DT-3	115	914F	280J	662 (301)	**WS39**	**V44M31F75CUEE**
112.5	2 at +2.5%	4 at –2.5%	DT-3	115	916A	280J	914 (415)	**WS19**	**V44M31F12CUEE**
150	2 at +2.5%	4 at –2.5%	DT-3	115	916A	280J	1132 (514)	**WS19**	**V44M31F49CUEE**
225	2 at +2.5%	4 at –2.5%	DT-3	115	917	280J	2036 (924)	**WS34**	**V44M31F22CUEE**
300	2 at +2.5%	4 at –2.5%	DT-3	115	923	275F	2325 (1056)	**WS37**	**V44M31F33CUEE**
500	2 at +2.5%	4 at –2.5%	DT-3	115	919E	275F	3681 (1671)	**WS35**	**V44M31F55CUEE**
15	2 at +2.5%	4 at –2.5%	DT-3	80	912D	280J	349 (158)	**WS38**	**V44M31B15CUEE**
30	2 at +2.5%	4 at –2.5%	DT-3	80	912D	280J	410 (186)	**WS38**	**V44M31B30CUEE**
45	2 at +2.5%	4 at –2.5%	DT-3	80	912D	280J	504 (229)	**WS38**	**V44M31B45CUEE**
75	2 at +2.5%	4 at –2.5%	DT-3	80	916A	280J	818 (371)	**WS19**	**V44M31B75CUEE**
112.5	2 at +2.5%	4 at –2.5%	DT-3	80	916A	280J	1065 (484)	**WS19**	**V44M31B12CUEE**
15	2 at +2.5%	4 at –2.5%	DT-3	80	917	280J	1410 (640)	**WS34**	**V44M31B49CUEE**
22	2 at +2.5%	4 at –2.5%	DT-3	80	923	280J	2030 (922)	**WS37**	**V44M31B22CUEE**
300	2 at +2.5%	4 at –2.5%	DT-3	80	919E	275F	3041 (1381)	**WS35**	**V44M31B33CUEE**

Notes

① Weights subject to change.

For other ratings or catalog numbers not shown, or for special enclosure types (including stainless steel), refer to Eaton. Frame drawings/dimensions information begins on **Page V2-T2-216**.

Three-Phase—Type DT-3 60 Hz NEMA TP-1 Energy-Efficient—Copper Windings

480 Delta Volts to 208Y/120 Volts

kVA	Full Capacity Taps FCAN	FCBN	Type	°C Temp. Rise	Frame	Wiring Diagram Number	Weight Lbs (kg) ①	Weathershield	Catalog Number
15	2 at +2.5%	4 at –2.5%	DT-3	150	912D	280B	250 (114)	**WS38**	**V48M28T15CUEE**
30	2 at +2.5%	4 at –2.5%	DT-3	150	912D	280B	350 (159)	**WS38**	**V48M28T30CUEE**
37.5	2 at +2.5%	4 at –2.5%	DT-3	150	912D	280B	415 (188)	**WS38**	**V48M28T37CUEE**
45	2 at +2.5%	4 at –2.5%	DT-3	150	912D	280B	416 (189)	**WS38**	**V48M28T45CUEE**
50	2 at +2.5%	4 at –2.5%	DT-3	150	914F	280B	647 (294)	**WS39**	**V48M28T50CUEE**
75	2 at +2.5%	4 at –2.5%	DT-3	150	914F	280B	643 (292)	**WS39**	**V48M28T75CUEE**
112.5	2 at +2.5%	4 at –2.5%	DT-3	150	916A	280B	876 (398)	**WS19**	**V48M28T12CUEE**
150	2 at +2.5%	4 at –2.5%	DT-3	150	916A	280B	1064 (483)	**WS19**	**V48M28T49CUEE**
225	2 at +2.5%	4 at –2.5%	DT-3	150	928	657B	1371 (622)	**WS41**	**V48M28T22CUEE**
300	2 at +2.5%	4 at –2.5%	DT-3	150	929	657B	1622 (736)	**WS42**	**V48M28T33CUEE**
500	2 at +2.5%	2 at –2.5%	DT-3	150	924	428B	3681 (1671)	**WS40**	**V48D28T55CUEE**
750	2 at +2.5%	4 at –2.5%	DT-3	150	920E	275A	4891 (2221)	**WS35**	**V48M28T77CUEE**
15	2 at +2.5%	4 at –2.5%	DT-3	115	912D	280B	256 (116)	**WS38**	**V48M28F15CUEE**
30	2 at +2.5%	4 at –2.5%	DT-3	115	912D	280B	337 (153)	**WS38**	**V48M28F30CUEE**
45	2 at +2.5%	4 at –2.5%	DT-3	115	912D	280B	446 (202)	**WS38**	**V48M28F45CUEE**
75	2 at +2.5%	4 at –2.5%	DT-3	115	914F	280B	662 (301)	**WS39**	**V48M28F75CUEE**
112.5	2 at +2.5%	4 at –2.5%	DT-3	115	916A	280B	914 (415)	**WS19**	**V48M28F12CUEE**
150	2 at +2.5%	4 at –2.5%	DT-3	115	916A	280B	1132 (514)	**WS19**	**V48M28F49CUEE**
225	2 at +2.5%	4 at –2.5%	DT-3	115	917	275A	2036 (924)	**WS34**	**V48M28F22CUEE**
300	2 at +2.5%	4 at –2.5%	DT-3	115	923	275A	2325 (1056)	**WS37**	**V48M28F33CUEE**
500	2 at +2.5%	4 at –2.5%	DT-3	115	919	275A	3681 (1671)	**WS35**	**V48M28F55CUEE**
15	2 at +2.5%	4 at –2.5%	DT-3	80	912D	280B	349 (158)	**WS38**	**V48M28B15CUEE**
30	2 at +2.5%	4 at –2.5%	DT-3	80	912D	280B	410 (186)	**WS38**	**V48M28B30CUEE**
45	2 at +2.5%	4 at –2.5%	DT-3	80	912D	280B	504 (229)	**WS38**	**V48M28B45CUEE**
75	2 at +2.5%	4 at –2.5%	DT-3	80	916A	280B	818 (371)	**WS19**	**V48M28B75CUEE**
112.5	2 at +2.5%	4 at –2.5%	DT-3	80	916A	280B	1065 (484)	**WS19**	**V48M28B12CUEE**
150	2 at +2.5%	4 at –2.5%	DT-3	80	917	280B	1410 (640)	**WS34**	**V48M28B49CUEE**
225	2 at +2.5%	4 at –2.5%	DT-3	80	923	275A	2030 (922)	**WS37**	**V48M28B22CUEE**
300	2 at +2.5%	4 at –2.5%	DT-3	80	919E	275A	3041 (1381)	**WS35**	**V48M28B33CUEE**
500	2 at +2.5%	4 at –2.5%	DT-3	80	920E	275A	4696 (2132)	**WS35**	**V48M28B55CUEE**

Notes

① Weights subject to change.

For other ratings or catalog numbers not shown, or for special enclosure types (including stainless steel), refer to Eaton. Frame drawings/dimensions information begins on **Page V2-T2-216**.

Three-Phase—Type DT-3 60 Hz NEMA TP-1 Energy-Efficient—Copper Windings

480 Delta Volts to 240 Delta Volts with 120 Volt Lighting Tap on Phase B ①

kVA	Full Capacity Taps FCAN	FCBN	Type	°C Temp. Rise	Frame	Wiring Diagram Number	Weight Lbs (kg) ②	Weathershield	Catalog Number
15	2 at +2.5%	4 at –2.5%	DT-3	150	912D	282B	253 (115)	**WS38**	**V48M22T15CUEE**
30	2 at +2.5%	4 at –2.5%	DT-3	150	912D	282B	352 (160)	**WS38**	**V48M22T30CUEE**
45	2 at +2.5%	4 at –2.5%	DT-3	150	912D	282B	415 (188)	**WS38**	**V48M22T45CUEE**
75	2 at +2.5%	4 at –2.5%	DT-3	150	914F	282B	703 (319)	**WS39**	**V48M22T75CUEE**
112.5	2 at +2.5%	4 at –2.5%	DT-3	150	916A	282B	935 (424)	**WS19**	**V48M22T12CUEE**
150	2 at +2.5%	4 at –2.5%	DT-3	150	916A	282B	1134 (515)	**WS19**	**V48M22T49CUEE**
225	2 at +2.5%	4 at –2.5%	DT-3	150	917	282B	1955 (888)	**WS34**	**V48M22T22CUEE**
300	2 at +2.5%	4 at –2.5%	DT-3	150	923	282B	2450 (1112)	**WS37**	**V48M22T33CUEE**
500	2 at +2.5%	4 at –2.5%	DT-3	150	919E	291A	3547 (1610)	**WS35**	**V48M22T55CUEE**
15	2 at +2.5%	4 at –2.5%	DT-3	115	912D	282B	248 (113)	**WS38**	**V48M22F15CUEE**
30	2 at +2.5%	4 at –2.5%	DT-3	115	912D	282B	410 (186)	**WS38**	**V48M22F30CUEE**
45	2 at +2.5%	4 at –2.5%	DT-3	115	912D	282B	445 (202)	**WS38**	**V48M22F45CUEE**
75	2 at +2.5%	4 at –2.5%	DT-3	115	914F	282B	750 (341)	**WS39**	**V48M22F75CUEE**
112.5	2 at +2.5%	4 at –2.5%	DT-3	115	916A	282B	963 (437)	**WS19**	**V48M22F12CUEE**
150	2 at +2.5%	4 at –2.5%	DT-3	115	916A	282B	1236 (561)	**WS19**	**V48M22F49CUEE**
225	2 at +2.5%	4 at –2.5%	DT-3	115	917	282B	2100 (953)	**WS34**	**V48M22F22CUEE**
300	2 at +2.5%	4 at –2.5%	DT-3	115	923	282B	2600 (1180)	**WS37**	**V48M22F33CUEE**
500	2 at +2.5%	4 at –2.5%	DT-3	115	919E	291A	3700 (1680)	**WS35**	**V48M22F55CUEE**
15	2 at +2.5%	4 at –2.5%	DT-3	80	912D	282B	301 (137)	**WS38**	**V48M22B15CUEE**
30	2 at +2.5%	4 at –2.5%	DT-3	80	912D	282B	460 (209)	**WS38**	**V48M22B30CUEE**
45	2 at +2.5%	4 at –2.5%	DT-3	80	912D	282B	505 (229)	**WS38**	**V48M22B45CUEE**
75	2 at +2.5%	4 at –2.5%	DT-3	80	916A	282B	835 (379)	**WS19**	**V48M22B75CUEE**
112.5	2 at +2.5%	4 at –2.5%	DT-3	80	916A	282B	1050 (477)	**WS19**	**V48M22B12CUEE**
150	2 at +2.5%	4 at –2.5%	DT-3	80	917	282B	2250 (1022)	**WS34**	**V48M22B49CUEE**
225	2 at +2.5%	4 at –2.5%	DT-3	80	923	291A	2900 (1317)	**WS37**	**V48M22B22CUEE**
300	2 at +2.5%	4 at –2.5%	DT-3	80	919E	291A	4000 (1816)	**WS35**	**V48M22B33CUEE**

Notes

① Lighting tap limited to 5% of nameplate full load capacity.

② Weight subject to change.

For other ratings or catalog numbers not shown, or for special enclosure types (including stainless steel), refer to Eaton. Frame drawings/dimensions information begins on **Page V2-T2-216**.

Three-Phase—Type DT-3 60 Hz NEMA TP-1 Energy-Efficient—Copper Windings

480 Delta Volts to 480Y/277 Volts

kVA	Full Capacity Taps FCAN	FCBN	Type	°C Temp. Rise	Frame	Wiring Diagram Number	Weight Lbs (kg) ①	Weathershield	Catalog Number
15	2 at +2.5%	4 at –2.5%	DT-3	150	912D	280B	257 (117)	**WS38**	**V48M47T15CUEE**
30	2 at +2.5%	4 at –2.5%	DT-3	150	912D	280B	330 (150)	**WS38**	**V48M47T30CUEE**
45	2 at +2.5%	4 at –2.5%	DT-3	150	912D	280B	430 (195)	**WS38**	**V48M47T45CUEE**
75	2 at +2.5%	4 at –2.5%	DT-3	150	914F	280B	675 (306)	**WS39**	**V48M47T75CUEE**
112.5	2 at +2.5%	4 at –2.5%	DT-3	150	916A	280B	900 (409)	**WS19**	**V48M47T12CUEE**
150	2 at +2.5%	4 at –2.5%	DT-3	150	916A	280B	1126 (511)	**WS19**	**V48M47T49CUEE**
225	2 at +2.5%	4 at –2.5%	DT-3	150	917	280B	2038 (925)	**WS34**	**V48M47T22CUEE**
300	2 at +2.5%	4 at –2.5%	DT-3	150	923	280B	2550 (1158)	**WS37**	**V48M47T33CUEE**
500	2 at +2.5%	4 at –2.5%	DT-3	150	919E	275A	3412 (1549)	**WS35**	**V48M47T55CUEE**
15	2 at +2.5%	4 at –2.5%	DT-3	115	912D	280B	258 (117)	**WS38**	**V48M47F15CUEE**
30	2 at +2.5%	4 at –2.5%	DT-3	115	912D	280B	401 (182)	**WS38**	**V48M47F30CUEE**
45	2 at +2.5%	4 at –2.5%	DT-3	115	912D	280B	455 (207)	**WS38**	**V48M47F45CUEE**
75	2 at +2.5%	4 at –2.5%	DT-3	115	914F	280B	678 (308)	**WS39**	**V48M47F75CUEE**
112.5	2 at +2.5%	4 at –2.5%	DT-3	115	916A	280B	676 (307)	**WS19**	**V48M47F12CUEE**
150	2 at +2.5%	4 at –2.5%	DT-3	115	916A	280B	1249 (567)	**WS19**	**V48M47F49CUEE**
225	2 at +2.5%	4 at –2.5%	DT-3	115	917	280B	2107 (957)	**WS34**	**V48M47F22CUEE**
300	2 at +2.5%	4 at –2.5%	DT-3	115	923	280B	2418 (1098)	**WS37**	**V48M47F33CUEE**
500	2 at +2.5%	4 at –2.5%	DT-3	115	919E	275A	3800 (1725)	**WS35**	**V48M47F55CUEE**
15	2 at +2.5%	4 at –2.5%	DT-3	80	912D	280B	369 (168)	**WS38**	**V48M47B15CUEE**
30	2 at +2.5%	4 at –2.5%	DT-3	80	912D	280B	423 (192)	**WS38**	**V48M47B30CUEE**
45	2 at +2.5%	4 at –2.5%	DT-3	80	912D	280B	552 (251)	**WS38**	**V48M47B45CUEE**
75	2 at +2.5%	4 at –2.5%	DT-3	80	916A	280B	920 (418)	**WS19**	**V48M47B75CUEE**
112.5	2 at +2.5%	4 at –2.5%	DT-3	80	916A	280B	1100 (499)	**WS19**	**V48M47B12CUEE**
150	2 at +2.5%	4 at –2.5%	DT-3	80	917	280B	1702 (773)	**WS34**	**V48M47B49CUEE**
225	2 at +2.5%	4 at –2.5%	DT-3	80	923	280B	2313 (1050)	**WS37**	**V48M47B22CUEE**
300	2 at +2.5%	4 at –2.5%	DT-3	80	919E	275A	3100 (1407)	**WS35**	**V48M47B33CUEE**

Notes

① Weights subject to change.

For other ratings or catalog numbers not shown, or for special enclosure types (including stainless steel), refer to Eaton. Frame drawings/dimensions information begins on **Page V2-T2-216**.

Three-Phase—Type DT-3 60 Hz NEMA TP-1 Energy-Efficient—Copper Windings

600 Delta Volts to 208Y/120 Volts

kVA	Full Capacity Taps FCAN	FCBN	Type	°C Temp. Rise	Frame	Wiring Diagram Number	Weight Lbs (kg) ①	Weathershield	Catalog Number
15	2 at +2.5%	4 at –2.5%	DT-3	150	912D	280A	263 (119)	**WS38**	**V60M28T15CUEE**
30	2 at +2.5%	4 at –2.5%	DT-3	150	912D	280A	368 (167)	**WS38**	**V60M28T30CUEE**
45	2 at +2.5%	4 at –2.5%	DT-3	150	912D	280A	437 (198)	**WS38**	**V60M28T45CUEE**
75	2 at +2.5%	4 at –2.5%	DT-3	150	914F	280A	675 (307)	**WS39**	**V60M28T75CUEE**
112.5	2 at +2.5%	4 at –2.5%	DT-3	150	916A	280A	920 (418)	**WS19**	**V60M28T12CUEE**
150	2 at +2.5%	4 at –2.5%	DT-3	150	916A	280A	1117 (507)	**WS19**	**V60M28T49CUEE**
225	2 at +2.5%	4 at –2.5%	DT-3	150	917	280A	1622 (737)	**WS34**	**V60M28T22CUEE**
300	2 at +2.5%	4 at –2.5%	DT-3	150	923	280A	2153 (977)	**WS37**	**V60M28T33CUEE**
500	2 at +2.5%	4 at –2.5%	DT-3	150	919E	280A	3865 (1755)	**WS35**	**V60M28T55CUEE**
15	2 at +2.5%	4 at –2.5%	DT-3	115	912D	280A	269 (122)	**WS38**	**V60M28F15CUEE**
30	2 at +2.5%	4 at –2.5%	DT-3	115	912D	280A	354 (161)	**WS38**	**V60M28F30CUEE**
45	2 at +2.5%	4 at –2.5%	DT-3	115	912D	280A	468 (213)	**WS38**	**V60M28F45CUEE**
75	2 at +2.5%	4 at –2.5%	DT-3	115	914F	280A	695 (316)	**WS39**	**V60M28F75CUEE**
112.5	2 at +2.5%	4 at –2.5%	DT-3	115	916A	280A	960 (436)	**WS19**	**V60M28F12CUEE**
150	2 at +2.5%	4 at –2.5%	DT-3	115	916A	280A	1189 (540)	**WS19**	**V60M28F49CUEE**
225	2 at +2.5%	4 at –2.5%	DT-3	115	917	280A	2138 (971)	**WS34**	**V60M28F22CUEE**
300	2 at +2.5%	4 at –2.5%	DT-3	115	923	280A	2441 (1108)	**WS37**	**V60M28F33CUEE**
500	2 at +2.5%	4 at –2.5%	DT-3	115	919E	280A	3865 (1755)	**WS35**	**V60M28F55CUEE**
15	2 at +2.5%	4 at –2.5%	DT-3	80	912D	280A	367 (166)	**WS38**	**V60M28B15CUEE**
30	2 at +2.5%	4 at –2.5%	DT-3	80	912D	280A	431 (195)	**WS38**	**V60M28B30CUEE**
45	2 at +2.5%	4 at –2.5%	DT-3	80	912D	280A	529 (240)	**WS38**	**V60M28B45CUEE**
75	2 at +2.5%	4 at –2.5%	DT-3	80	916A	280A	859 (390)	**WS19**	**V60M28B75CUEE**
112.5	2 at +2.5%	4 at –2.5%	DT-3	80	916A	280A	1118 (508)	**WS19**	**V60M28B12CUEE**
150	2 at +2.5%	4 at –2.5%	DT-3	80	917	280A	1481 (672)	**WS34**	**V60M28B49CUEE**
225	2 at +2.5%	4 at –2.5%	DT-3	80	923	280A	2132 (968)	**WS37**	**V60M28B22CUEE**
300	2 at +2.5%	4 at –2.5%	DT-3	80	919E	280A	3193 (1450)	**WS35**	**V60M28B33CUEE**

Notes

① Weights subject to change.

For other ratings or catalog numbers not shown, or for special enclosure types (including stainless steel), refer to Eaton. Frame drawings/dimensions information begins on **Page V2-T2-216**.

Three-Phase—Type DT-3 60 Hz NEMA TP-1 Energy-Efficient—Copper Windings

600 Delta Volts to 240 Delta Volts with 120 Volt Lighting Tap on Phase B ①

kVA	Full Capacity Taps FCAN	FCBN	Type	°C Temp. Rise	Frame	Wiring Diagram Number	Weight Lbs (kg) ②	Weathershield	Catalog Number
15	2 at +2.5%	4 at –2.5%	DT-3	150	912D	282B	263 (119)	**WS38**	**V60M22T15CUEE**
30	2 at +2.5%	4 at –2.5%	DT-3	150	912D	282B	368 (167)	**WS38**	**V60M22T30CUEE**
45	2 at +2.5%	4 at –2.5%	DT-3	150	912D	282B	437 (198)	**WS38**	**V60M22T45CUEE**
75	2 at +2.5%	4 at –2.5%	DT-3	150	914F	282B	675 (307)	**WS39**	**V60M22T75CUEE**
112.5	2 at +2.5%	4 at –2.5%	DT-3	150	916A	282B	920 (418)	**WS19**	**V60M22T12CUEE**
150	2 at +2.5%	4 at –2.5%	DT-3	150	916A	282B	1117 (507)	**WS19**	**V60M22T49CUEE**
225	2 at +2.5%	4 at –2.5%	DT-3	150	917	282B	1622 (737)	**WS34**	**V60M22T22CUEE**
300	2 at +2.5%	4 at –2.5%	DT-3	150	923	282B	2153 (977)	**WS37**	**V60M22T33CUEE**
500	2 at +2.5%	4 at –2.5%	DT-3	150	919E	282B	3865 (1755)	**WS35**	**V60M22T55CUEE**
15	2 at +2.5%	4 at –2.5%	DT-3	115	912D	282B	269 (122)	**WS38**	**V60M22F15CUEE**
30	2 at +2.5%	4 at –2.5%	DT-3	115	912D	282B	354 (161)	**WS38**	**V60M22F30CUEE**
45	2 at +2.5%	4 at –2.5%	DT-3	115	912D	282B	468 (213)	**WS38**	**V60M22F45CUEE**
75	2 at +2.5%	4 at –2.5%	DT-3	115	914F	282B	695 (316)	**WS39**	**V60M22F75CUEE**
112.5	2 at +2.5%	4 at –2.5%	DT-3	115	916A	282B	960 (436)	**WS19**	**V60M22F12CUEE**
150	2 at +2.5%	4 at –2.5%	DT-3	115	916A	282B	1189 (540)	**WS19**	**V60M22F49CUEE**
225	2 at +2.5%	4 at –2.5%	DT-3	115	917	282B	2138 (971)	**WS34**	**V60M22F22CUEE**
300	2 at +2.5%	4 at –2.5%	DT-3	115	923	282B	2441 (1108)	**WS37**	**V60M22F33CUEE**
500	2 at +2.5%	4 at –2.5%	DT-3	115	919E	282B	3865 (1755)	**WS35**	**V60M22F55CUEE**
15	2 at +2.5%	4 at –2.5%	DT-3	80	912D	282B	367 (166)	**WS38**	**V60M22B15CUEE**
30	2 at +2.5%	4 at –2.5%	DT-3	80	912D	282B	431 (195)	**WS38**	**V60M22B30CUEE**
45	2 at +2.5%	4 at –2.5%	DT-3	80	912D	282B	529 (240)	**WS38**	**V60M22B45CUEE**
75	2 at +2.5%	4 at –2.5%	DT-3	80	916A	282B	859 (390)	**WS19**	**V60M22B75CUEE**
112.5	2 at +2.5%	4 at –2.5%	DT-3	80	916A	282B	1119 (508)	**WS19**	**V60M22B12CUEE**
150	2 at +2.5%	4 at –2.5%	DT-3	80	917	282B	1481 (672)	**WS34**	**V60M22B49CUEE**
225	2 at +2.5%	4 at –2.5%	DT-3	80	923	282B	2132 (968)	**WS37**	**V60M22B22CUEE**
300	2 at +2.5%	4 at –2.5%	DT-3	80	919E	282B	3193 (1450)	**WS35**	**V60M22B33CUEE**

Notes

① Lighting tap limited to 5% of nameplate full load capacity.

② Weights subject to change.

For other ratings or catalog numbers not shown, or for special enclosure types (including stainless steel), refer to Eaton. Frame drawings/dimensions information begins on **Page V2-T2-216**.

Three-Phase—Type DT-3 60 Hz NEMA TP-1 Energy-Efficient—Copper Windings

600 Delta Volts to 480Y/277 Volts

kVA	Full Capacity Taps FCAN	FCBN	Type	°C Temp. Rise	Frame	Wiring Diagram Number	Weight Lbs (kg) ①	Weathershield	Catalog Number
15	2 at +2.5%	4 at –2.5%	DT-3	150	912D	280A	283 (128)	**WS38**	**V60M47T15CUEE**
30	2 at +2.5%	4 at –2.5%	DT-3	150	912D	280A	363 (165)	**WS38**	**V60M47T30CUEE**
45	2 at +2.5%	4 at –2.5%	DT-3	150	912D	280A	473 (215)	**WS38**	**V60M47T45CUEE**
75	2 at +2.5%	4 at –2.5%	DT-3	150	914F	280A	743 (337)	**WS39**	**V60M47T75CUEE**
112.5	2 at +2.5%	4 at –2.5%	DT-3	150	916A	280A	990 (449)	**WS19**	**V60M47T12CUEE**
150	2 at +2.5%	4 at –2.5%	DT-3	150	916A	280A	1239 (562)	**WS19**	**V60M47T49CUEE**
225	2 at +2.5%	4 at –2.5%	DT-3	150	917	280A	2242 (1018)	**WS34**	**V60M47T22CUEE**
300	2 at +2.5%	4 at –2.5%	DT-3	150	923	280A	2805 (1273)	**WS37**	**V60M47T33CUEE**
500	2 at +2.5%	4 at –2.5%	DT-3	150	919E	275C	3753 (1704)	**WS35**	**V60M47T55CUEE**
15	2 at +2.5%	4 at –2.5%	DT-3	115	912D	280A	284 (129)	**WS38**	**V60M47F15CUEE**
30	2 at +2.5%	4 at –2.5%	DT-3	115	912D	280A	441 (200)	**WS38**	**V60M47F30CUEE**
45	2 at +2.5%	4 at –2.5%	DT-3	115	912D	280A	501 (227)	**WS38**	**V60M47F45CUEE**
75	2 at +2.5%	4 at –2.5%	DT-3	115	914F	280A	746 (339)	**WS39**	**V60M47F75CUEE**
112.5	2 at +2.5%	4 at –2.5%	DT-3	115	916A	280A	744 (338)	**WS19**	**V60M47F12CUEE**
150	2 at +2.5%	4 at –2.5%	DT-3	115	916A	280A	1374 (624)	**WS19**	**V60M47F49CUEE**
225	2 at +2.5%	4 at –2.5%	DT-3	115	917	280A	2318 (1052)	**WS34**	**V60M47F22CUEE**
300	2 at +2.5%	4 at –2.5%	DT-3	115	923	280A	2660 (1208)	**WS37**	**V60M47F33CUEE**
500	2 at +2.5%	4 at –2.5%	DT-3	115	919E	275C	4180 (1898)	**WS35**	**V60M47F55CUEE**
15	2 at +2.5%	4 at –2.5%	DT-3	80	912D	280A	406 (184)	**WS38**	**V60M47B15CUEE**
30	2 at +2.5%	4 at –2.5%	DT-3	80	912D	280A	465 (211)	**WS38**	**V60M47B30CUEE**
45	2 at +2.5%	4 at –2.5%	DT-3	80	912D	280A	607 (276)	**WS38**	**V60M47B45CUEE**
75	2 at +2.5%	4 at –2.5%	DT-3	80	916A	280A	1012 (459)	**WS19**	**V60M47B75CUEE**
112.5	2 at +2.5%	4 at –2.5%	DT-3	80	916A	280A	1210 (549)	**WS19**	**V60M47B12CUEE**
150	2 at +2.5%	4 at –2.5%	DT-3	80	917	280A	1872 (850)	**WS34**	**V60M47B49CUEE**
225	2 at +2.5%	4 at –2.5%	DT-3	80	923	280A	2544 (1155)	**WS37**	**V60M47B22CUEE**
300	2 at +2.5%	4 at –2.5%	DT-3	80	919E	275C	3410 (1548)	**WS35**	**V60M47B33CUEE**

Notes

① Weights subject to change.

For other ratings or catalog numbers not shown, or for special enclosure types (including stainless steel), refer to Eaton. Frame drawings/dimensions information begins on **Page V2-T2-216**.

Three-Phase—Type DT-3 60 Hz NEMA TP-1 Energy-Efficient Electrostatically Shielded—Aluminum Windings

208 Delta Volts to 208Y/120 Volts

kVA	Full Capacity Taps FCAN	FCBN	Type	°C Temp. Rise	Frame	Wiring Diagram Number	Weight Lbs (kg) ①	Weathershield	Catalog Number
15	2 at +2.5%	4 at –2.5%	DT-3	150	912D	283A	220 (100)	**WS38**	**V29M28E15EE**
30	2 at +2.5%	4 at –2.5%	DT-3	150	912D	283A	289 (131)	**WS38**	**V29M28E30EE**
45	2 at +2.5%	4 at –2.5%	DT-3	150	912D	283A	365 (166)	**WS38**	**V29M28E45EE**
75	2 at +2.5%	4 at –2.5%	DT-3	150	914F	283A	570 (259)	**WS39**	**V29M28E75EE**
112.5	1 at +5%	2 at –5%	DT-3	150	916A	287A	930 (422)	**WS19**	**V29R28E12EE**
150	1 at +5%	2 at –5%	DT-3	150	916A	287A	1013 (460)	**WS19**	**V29R28E49EE**
225	1 at +5%	2 at –5%	DT-3	150	918A	287A	1639 (744)	**WS34**	**V29R28E22EE**
300	1 at +5%	2 at –5%	DT-3	150	919E	287A	1697 (770)	**WS35**	**V29R28E33EE**
500	1 at +5%	2 at –5%	DT-3	150	920E	287A	2690 (1221)	**WS35**	**V29R28E55EE**
15	2 at +2.5%	4 at –2.5%	DT-3	115	912D	283A	240 (109)	**WS38**	**V29M28F15EEES**
30	2 at +2.5%	4 at –2.5%	DT-3	115	912D	283A	365 (166)	**WS38**	**V29M28F30EEES**
45	2 at +2.5%	4 at –2.5%	DT-3	115	912D	283A	401 (182)	**WS38**	**V29M28F45EEES**
75	2 at +2.5%	4 at –2.5%	DT-3	115	914F	283A	606 (275)	**WS39**	**V29M28F75EEES**
112.5	1 at +5%	2 at –5%	DT-3	115	916A	287A	960 (436)	**WS19**	**V29R28F12EEES**
150	1 at +5%	2 at –5%	DT-3	115	916A	287A	1060 (481)	**WS19**	**V29R28F49EEES**
225	1 at +5%	2 at –5%	DT-3	115	918A	287A	1500 (681)	**WS34**	**V29R28F22EEES**
300	1 at +5%	2 at –5%	DT-3	115	919E	287A	1800 (817)	**WS35**	**V29R28F33EEES**
500	1 at +5%	2 at –5%	DT-3	115	920E	287A	2900 (1317)	**WS35**	**V29R28F55EEES**
15	2 at +2.5%	4 at –2.5%	DT-3	80	912D	283A	280 (127)	**WS38**	**V29M28B15EEES**
30	2 at +2.5%	4 at –2.5%	DT-3	80	912D	283A	370 (168)	**WS38**	**V29M28B30EEES**
45	2 at +2.5%	4 at –2.5%	DT-3	80	914F	283A	563 (256)	**WS39**	**V29M28B45EEES**
75	2 at +2.5%	4 at –2.5%	DT-3	80	916A	283A	965 (438)	**WS19**	**V29M28B75EEES**
112.5	2 at +2.5%	4 at –2.5%	DT-3	80	916A	283A	950 (431)	**WS19**	**V29M28B12EEES**
150	1 at +5%	2 at –5%	DT-3	80	918A	287A	1430 (649)	**WS34**	**V29R28B49EEES**
225	1 at +5%	2 at –5%	DT-3	80	919E	287A	1750 (795)	**WS35**	**V29R28B22EEES**
300	1 at +5%	2 at –5%	DT-3	80	920E	287A	2400 (1090)	**WS35**	**V29R28B33EEES**

Notes

① Weights subject to change.

For other ratings or catalog numbers not shown, or for special enclosure types (including stainless steel), refer to Eaton. Frame drawings/dimensions information begins on **Page V2-T2-216**.

Three-Phase—Type DT-3 60 Hz NEMA TP-1 Energy-Efficient Electrostatically Shielded—Aluminum Windings

208 Delta Volts to 480Y/277 Volts

kVA	Full Capacity Taps FCAN	FCBN	Type	°C Temp. Rise	Frame	Wiring Diagram Number	Weight Lbs (kg) ①	Weathershield	Catalog Number
15	2 at +2.5%	4 at –2.5%	DT-3	150	912D	345A	196 (89)	**WS38**	**V29M47E15EE**
30	2 at +2.5%	4 at –2.5%	DT-3	150	912D	345A	296 (134)	**WS38**	**V29M47E30EE**
45	2 at +2.5%	4 at –2.5%	DT-3	150	912D	345A	410 (186)	**WS38**	**V29M47E45EE**
75	2 at +2.5%	4 at –2.5%	DT-3	150	914F	345A	590 (268)	**WS39**	**V29M47E75EE**
112.5	1 at +5%	2 at –5%	DT-3	150	916A	315A	784 (356)	**WS19**	**V29R47E12EE**
150	1 at +5%	2 at –5%	DT-3	150	916A	315A	931 (423)	**WS19**	**V29R47E49EE**
225	1 at +5%	2 at –5%	DT-3	150	918A	315A	1550 (704)	**WS34**	**V29R47E22EE**
300	1 at +5%	2 at –5%	DT-3	150	919E	315A	2274 (1032)	**WS35**	**V29R47E33EE**
500	1 at +5%	2 at –5%	DT-3	150	919E	315A	2869 (1303)	**WS35**	**V29R47E55EE**
15	2 at +2.5%	4 at –2.5%	DT-3	115	912D	345A	215 (98)	**WS38**	**V29M47F15EEES**
30	2 at +2.5%	4 at –2.5%	DT-3	115	912D	345A	380 (173)	**WS38**	**V29M47F30EEES**
45	2 at +2.5%	4 at –2.5%	DT-3	115	912D	345A	400 (182)	**WS38**	**V29M47F45EEES**
75	2 at +2.5%	4 at –2.5%	DT-3	115	914F	345A	585 (266)	**WS39**	**V29M47F75EEES**
112.5	1 at +5%	2 at –5%	DT-3	115	916A	315A	800 (363)	**WS19**	**V29R47F12EEES**
150	1 at +5%	2 at –5%	DT-3	115	916A	315A	950 (431)	**WS19**	**V29R47F49EEES**
225	1 at +5%	2 at –5%	DT-3	115	918A	315A	1591 (722)	**WS34**	**V29R47F22EEES**
300	1 at +5%	2 at –5%	DT-3	115	919E	315A	2320 (1053)	**WS35**	**V29R47F33EEES**
500	1 at +5%	2 at –5%	DT-3	115	919E	315A	2950 (1339)	**WS35**	**V29R47F55EEES**
15	2 at +2.5%	4 at –2.5%	DT-3	80	912D	345A	300 (136)	**WS38**	**V29M47B15EEES**
30	2 at +2.5%	4 at –2.5%	DT-3	80	912D	345A	390 (177)	**WS38**	**V29M47B30EEES**
45	2 at +2.5%	4 at –2.5%	DT-3	80	914F	345A	550 (250)	**WS39**	**V29M47B45EEES**
75	1 at +5%	2 at –5%	DT-3	80	916A	315A	757 (344)	**WS19**	**V29R47B75EEES**
112.5	1 at +5%	2 at –5%	DT-3	80	916A	315A	930 (422)	**WS19**	**V29R47B12EEES**
150	1 at +5%	2 at –5%	DT-3	80	918A	315A	1550 (704)	**WS34**	**V29R47B49EEES**
225	1 at +5%	2 at –5%	DT-3	80	919E	315A	2275 (1033)	**WS35**	**V29R47B22EEES**
300	1 at +5%	2 at –5%	DT-3	80	920E	315A	2870 (1303)	**WS35**	**V29R47B33EEES**

Notes

① Weights subject to change.

For other ratings or catalog numbers not shown, or for special enclosure types (including stainless steel), refer to Eaton. Frame drawings/dimensions information begins on **Page V2-T2-216**.

Three-Phase—Type DT-3 60 Hz NEMA TP-1 Energy-Efficient Electrostatically Shielded—Aluminum Windings

240 Delta Volts to 208Y/120 Volts

kVA	Full Capacity Taps FCAN	FCBN	Type	°C Temp. Rise	Frame	Wiring Diagram Number	Weight Lbs (kg) ①	Weathershield	Catalog Number
15	2 at +2.5%	4 at –2.5%	DT-3	150	912D	283G	206 (94)	**WS38**	**V24M28E15EE**
30	2 at +2.5%	4 at –2.5%	DT-3	150	912D	283G	297 (135)	**WS38**	**V24M28E30EE**
45	2 at +2.5%	4 at –2.5%	DT-3	150	912D	283G	332 (151)	**WS38**	**V24M28E45EE**
75	2 at +2.5%	4 at –2.5%	DT-3	150	914F	283G	562 (255)	**WS39**	**V24M28E75EE**
112.5	2 at +2.5%	4 at –2.5%	DT-3	150	916A	283G	760 (345)	**WS19**	**V24M28E12EE**
150	2 at +2.5%	4 at –2.5%	DT-3	150	916A	283G	974 (442)	**WS19**	**V24M28E49EE**
225	1 at +5%	2 at –5%	DT-3	150	917	287B	1460 (663)	**WS34**	**V24R28E22EE**
300	1 at +5%	2 at –5%	DT-3	150	918A	287B	1652 (750)	**WS34**	**V24R28E33EE**
500	1 at +5%	2 at –5%	DT-3	150	919E	287B	2690 (1221)	**WS35**	**V24R28E55EE**
15	2 at +2.5%	4 at –2.5%	DT-3	115	912D	283G	240 (109)	**WS38**	**V24M28F15EEES**
30	2 at +2.5%	4 at –2.5%	DT-3	115	912D	283G	389 (177)	**WS38**	**V24M28F30EEES**
45	2 at +2.5%	4 at –2.5%	DT-3	115	912D	283G	396 (180)	**WS38**	**V24M28F45EEES**
75	2 at +2.5%	4 at –2.5%	DT-3	115	914F	283G	593 (269)	**WS39**	**V24M28F75EEES**
112.5	2 at +2.5%	4 at –2.5%	DT-3	115	916A	283G	941 (427)	**WS19**	**V24M28F12EEES**
150	1 at +5%	2 at –5%	DT-3	115	916A	287B	1060 (481)	**WS19**	**V24R28F49EEES**
225	1 at +5%	2 at –5%	DT-3	115	917	287B	1500 (681)	**WS34**	**V24R28F22EEES**
300	1 at +5%	2 at –5%	DT-3	115	918A	287B	1800 (817)	**WS34**	**V24R28F33EEES**
500	1 at +5%	2 at –5%	DT-3	115	919E	287B	2900 (1317)	**WS35**	**V24R28F55EEES**
15	2 at +2.5%	4 at –2.5%	DT-3	80	912D	283G	280 (127)	**WS38**	**V24M28B15EEES**
30	2 at +2.5%	4 at –2.5%	DT-3	80	912D	283G	350 (159)	**WS38**	**V24M28B30EEES**
45	2 at +2.5%	4 at –2.5%	DT-3	80	914F	283G	560 (254)	**WS39**	**V24M28B45EEES**
75	2 at +2.5%	4 at –2.5%	DT-3	80	916A	283G	883 (401)	**WS19**	**V24M28B75EEES**
112.5	1 at +5%	2 at –5%	DT-3	80	916A	287B	950 (431)	**WS19**	**V24R28B12EEES**
150	1 at +5%	2 at –5%	DT-3	80	917	287B	1430 (649)	**WS34**	**V24R28B49EEES**
225	1 at +5%	2 at –5%	DT-3	80	918A	287B	1750 (795)	**WS34**	**V24R28B22EEES**
300	1 at +5%	2 at –5%	DT-3	80	919E	287B	2400 (1090)	**WS35**	**V24R28B33EEES**

Notes

① Weights subject to change.

For other ratings or catalog numbers not shown, or for special enclosure types (including stainless steel), refer to Eaton. Frame drawings/dimensions information begins on **Page V2-T2-216**.

Three-Phase—Type DT-3 60 Hz NEMA TP-1 Energy-Efficient Electrostatically Shielded—Aluminum Windings

240 Delta Volts to 480Y/277 Volts

kVA	Full Capacity Taps FCAN	FCBN	Type	°C Temp. Rise	Frame	Wiring Diagram Number	Weight Lbs (kg) ①	Weathershield	Catalog Number
15	2 at +2.5%	4 at –2.5%	DT-3	150	912D	345C	227 (103)	**WS38**	**V24M47E15EE**
30	2 at +2.5%	4 at –2.5%	DT-3	150	912D	345C	312 (142)	**WS38**	**V24M47E30EE**
45	2 at +2.5%	4 at –2.5%	DT-3	150	912D	345C	380 (173)	**WS38**	**V24M47E45EE**
75	2 at +2.5%	4 at –2.5%	DT-3	150	914F	345C	573 (260)	**WS39**	**V24M47E75EE**
112.5	2 at +2.5%	4 at –2.5%	DT-3	150	916A	345C	800 (363)	**WS19**	**V24M47E12EE**
150	2 at +2.5%	4 at –2.5%	DT-3	150	916A	345C	885 (402)	**WS19**	**V24M47E49EE**
225	1 at +5%	2 at –5%	DT-3	150	918A	—	1612 (732)	**WS34**	**V24R47E22EE**
300	1 at +5%	2 at –5%	DT-3	150	919E	—	1652 (750)	**WS35**	**V24R47E33EE**
500	1 at +5%	2 at –5%	DT-3	150	919E	—	2695 (1224)	**WS35**	**V24R47E55EE**
15	2 at +2.5%	4 at –2.5%	DT-3	115	912D	345C	240 (109)	**WS38**	**V24M47F15EEES**
30	2 at +2.5%	4 at –2.5%	DT-3	115	912D	345C	389 (177)	**WS38**	**V24M47F30EEES**
45	2 at +2.5%	4 at –2.5%	DT-3	115	912D	345C	396 (180)	**WS38**	**V24M47F45EEES**
75	2 at +2.5%	4 at –2.5%	DT-3	115	914F	345C	593 (269)	**WS39**	**V24M47F75EEES**
112.5	1 at +5%	2 at –5%	DT-3	115	916A	—	941 (427)	**WS19**	**V24R47F12EEES**
150	1 at +5%	2 at –5%	DT-3	115	916A	—	1060 (481)	**WS19**	**V24R47F49EEES**
225	1 at +5%	2 at –5%	DT-3	115	918A	—	1500 (681)	**WS34**	**V24R47F22EEES**
300	1 at +5%	2 at –5%	DT-3	115	919E	—	1800 (817)	**WS35**	**V24R47F33EEES**
500	1 at +5%	2 at –5%	DT-3	115	919E	—	2900 (1317)	**WS35**	**V24R47F55EEES**
15	2 at +2.5%	4 at –2.5%	DT-3	80	912D	345C	280 (127)	**WS38**	**V24M47B15EEES**
30	2 at +2.5%	4 at –2.5%	DT-3	80	912D	345C	350 (159)	**WS38**	**V24M47B30EEES**
45	2 at +2.5%	4 at –2.5%	DT-3	80	914F	345C	560 (254)	**WS39**	**V24M47B45EEES**
75	2 at +2.5%	4 at –2.5%	DT-3	80	916A	345C	883 (401)	**WS19**	**V24M47B75EEES**
112.5	1 at +5%	2 at –5%	DT-3	80	916A	—	950 (431)	**WS19**	**V24R47B12EEES**
150	1 at +5%	2 at –5%	DT-3	80	918A	—	1430 (649)	**WS34**	**V24R47B49EEES**
225	1 at +5%	2 at –5%	DT-3	80	919E	—	1750 (795)	**WS35**	**V24R47B22EEES**
300	1 at +5%	2 at –5%	DT-3	80	919E	—	2400 (1090)	**WS35**	**V24R47B33EEES**

Notes

① Weights subject to change.

For other ratings or catalog numbers not shown, or for special enclosure types (including stainless steel), refer to Eaton. Frame drawings/dimensions information begins on **Page V2-T2-216**.

Three-Phase—Type DT-3 60 Hz NEMA TP-1 Energy-Efficient Electrostatically Shielded—Aluminum Windings

440 Delta Volts to 220Y/127 Volts

kVA	Full Capacity Taps FCAN	FCBN	Type	°C Temp. Rise	Frame	Wiring Diagram Number	Weight Lbs (kg) ①	Weathershield	Catalog Number
15	2 at +2.5%	4 at –2.5%	DT-3	150	912D	283Q	213 (97)	**WS38**	**V44M31E15EE**
30	2 at +2.5%	4 at –2.5%	DT-3	150	912D	283Q	300 (136)	**WS38**	**V44M31E30EE**
45	2 at +2.5%	4 at –2.5%	DT-3	150	912D	283Q	348 (158)	**WS38**	**V44M31E45EE**
75	2 at +2.5%	4 at –2.5%	DT-3	150	914F	283Q	583 (265)	**WS39**	**V44M31E75EE**
112.5	2 at +2.5%	4 at –2.5%	DT-3	150	916A	283Q	807 (366)	**WS19**	**V44M31E12EE**
150	2 at +2.5%	4 at –2.5%	DT-3	150	916A	283Q	950 (431)	**WS19**	**V44M31E49EE**
225	2 at +2.5%	4 at –2.5%	DT-3	150	917	283Q	1364 (619)	**WS34**	**V44M31E22EE**
300	2 at +2.5%	4 at –2.5%	DT-3	150	918A	283Q	1719 (780)	**WS34**	**V44M31E33EE**
500	2 at +2.5%	4 at –2.5%	DT-3	150	919E	283Q	2560 (1162)	**WS35**	**V44M31E55EE**
15	2 at +2.5%	4 at –2.5%	DT-3	115	912D	283Q	204 (93)	**WS38**	**V44M31F15EEES**
30	2 at +2.5%	4 at –2.5%	DT-3	115	912D	283Q	326 (148)	**WS38**	**V44M31F30EEES**
45	2 at +2.5%	4 at –2.5%	DT-3	115	912D	283Q	419 (190)	**WS38**	**V44M31F45EEES**
75	2 at +2.5%	4 at –2.5%	DT-3	115	914F	283Q	560 (254)	**WS39**	**V44M31F75EEES**
112.5	2 at +2.5%	4 at –2.5%	DT-3	115	916A	283Q	805 (365)	**WS19**	**V44M31F12EEES**
150	2 at +2.5%	4 at –2.5%	DT-3	115	916A	283Q	1012 (459)	**WS19**	**V44M31F49EEES**
225	2 at +2.5%	4 at –2.5%	DT-3	115	918A	283Q	1589 (721)	**WS34**	**V44M31F22EEES**
300	2 at +2.5%	4 at –2.5%	DT-3	115	923	283Q	1782 (809)	**WS37**	**V44M31F33EEES**
500	2 at +2.5%	4 at –2.5%	DT-3	115	920E	283Q	3117 (1415)	**WS35**	**V44M31F55EEES**
15	2 at +2.5%	4 at –2.5%	DT-3	80	912D	283Q	294 (133)	**WS38**	**V44M31B15EEES**
30	2 at +2.5%	4 at –2.5%	DT-3	80	912D	283Q	374 (170)	**WS38**	**V44M31B30EEES**
45	2 at +2.5%	4 at –2.5%	DT-3	80	914F	283Q	586 (266)	**WS39**	**V44M31B45EEES**
75	2 at +2.5%	4 at –2.5%	DT-3	80	916A	283Q	807 (366)	**WS19**	**V44M31B75EEES**
112.5	2 at +2.5%	4 at –2.5%	DT-3	80	916A	283Q	1005 (456)	**WS19**	**V44M31B12EEES**
150	2 at +2.5%	4 at –2.5%	DT-3	80	917	283Q	1170 (531)	**WS34**	**V44M31B49EEES**
225	2 at +2.5%	4 at –2.5%	DT-3	80	923	283Q	1764 (801)	**WS37**	**V44M31B22EEES**
300	2 at +2.5%	4 at –2.5%	DT-3	80	919E	283Q	2317 (1052)	**WS35**	**V44M31B33EEES**

Notes

① Weights subject to change.

For other ratings or catalog numbers not shown, or for special enclosure types (including stainless steel), refer to Eaton. Frame drawings/dimensions information begins on **Page V2-T2-216**.

Three-Phase—Type DT-3 60 Hz NEMA TP-1 Energy-Efficient Electrostatically Shielded—Aluminum Windings

480 Delta Volts to 208Y/120 Volts

kVA	Full Capacity Taps FCAN	FCBN	Type	°C Temp. Rise	Frame	Wiring Diagram Number	Weight Lbs (kg) ①	Weathershield	Catalog Number
15	2 at +2.5%	4 at –2.5%	DT-3	150	912D	283B	213 (97)	**WS38**	**V48M28E15EE**
30	2 at +2.5%	4 at –2.5%	DT-3	150	912D	283B	300 (136)	**WS38**	**V48M28E30EE**
37.5	2 at +2.5%	4 at –2.5%	DT-3	150	912D	283B	345 (157)	**WS38**	**V48M28E37EE**
45	2 at +2.5%	4 at –2.5%	DT-3	150	912D	283B	348 (158)	**WS38**	**V48M28E45EE**
50	2 at +2.5%	4 at –2.5%	DT-3	150	914F	283B	550 (250)	**WS39**	**V48M28E50EE**
75	2 at +2.5%	4 at –2.5%	DT-3	150	914F	283B	583 (265)	**WS39**	**V48M28E75EE**
112.5	2 at +2.5%	4 at –2.5%	DT-3	150	916A	283B	807 (366)	**WS19**	**V48M28E12EE**
150	2 at +2.5%	4 at –2.5%	DT-3	150	916A	283B	950 (431)	**WS19**	**V48M28E49EE**
225	2 at +2.5%	4 at –2.5%	DT-3	150	928	658B	1371 (622)	**WS41**	**V48M28E22EE**
300	2 at +2.5%	4 at –2.5%	DT-3	150	929	658B	1719 (780)	**WS42**	**V48M28E33EE**
500	2 at +2.5%	2 at –2.5%	DT-3	150	924	487A	2560 (1162)	**WS40**	**V48D28E55EE**
750	2 at +2.5%	4 at –2.5%	DT-3	150	920E	292A	3370 (1530)	**WS35**	**V48M28E77EE**
15	2 at +2.5%	4 at –2.5%	DT-3	115	912D	283B	204 (93)	**WS38**	**V48M28F15EEES**
30	2 at +2.5%	4 at –2.5%	DT-3	115	912D	283B	326 (148)	**WS38**	**V48M28F30EEES**
45	2 at +2.5%	4 at –2.5%	DT-3	115	912D	283B	419 (190)	**WS38**	**V48M28F45EEES**
75	2 at +2.5%	4 at –2.5%	DT-3	115	914F	283B	560 (254)	**WS39**	**V48M28F75EEES**
112.5	2 at +2.5%	4 at –2.5%	DT-3	115	916A	283B	805 (365)	**WS19**	**V48M28F12EEES**
150	2 at +2.5%	4 at –2.5%	DT-3	115	916A	283B	1012 (459)	**WS19**	**V48M28F49EEES**
225	2 at +2.5%	4 at –2.5%	DT-3	115	918A	283B	1589 (721)	**WS34**	**V48M28F22EEES**
300	2 at +2.5%	4 at –2.5%	DT-3	115	923	283B	1782 (809)	**WS37**	**V48M28F33EEES**
500	2 at +2.5%	4 at –2.5%	DT-3	115	920E	292A	3117 (1415)	**WS35**	**V48M28F55EEES**
15	2 at +2.5%	4 at –2.5%	DT-3	80	912D	283B	294 (133)	**WS38**	**V48M28B15EEES**
30	2 at +2.5%	4 at –2.5%	DT-3	80	912D	283B	374 (170)	**WS38**	**V48M28B30EEES**
45	2 at +2.5%	4 at –2.5%	DT-3	80	914F	283B	586 (266)	**WS39**	**V48M28B45EEES**
75	2 at +2.5%	4 at –2.5%	DT-3	80	916A	283B	807 (366)	**WS19**	**V48M28B75EEES**
112.5	2 at +2.5%	4 at –2.5%	DT-3	80	916A	283B	1005 (456)	**WS19**	**V48M28B12EEES**
150	2 at +2.5%	4 at –2.5%	DT-3	80	917	283B	1170 (531)	**WS34**	**V48M28B49EEES**
225	2 at +2.5%	4 at –2.5%	DT-3	80	923	283B	1764 (801)	**WS37**	**V48M28B22EEES**
300	2 at +2.5%	4 at –2.5%	DT-3	80	919E	292A	2317 (1052)	**WS35**	**V48M28B33EEES**
500	2 at +2.5%	4 at –2.5%	DT-3	80	920E	292A	3379 (1534)	**WS35**	**V48M28B55EEES**

Notes

① Weights subject to change.

For other ratings or catalog numbers not shown, or for special enclosure types (including stainless steel), refer to Eaton. Frame drawings/dimensions information begins on **Page V2-T2-216**.

Three-Phase—Type DT-3 60 Hz NEMA TP-1 Energy-Efficient Electrostatically Shielded—Aluminum Windings

480 Delta Volts to 240 Delta Volts with 120 Volt Lighting Tap on Phase B ①

kVA	Full Capacity Taps FCAN	FCBN	Type	°C Temp. Rise	Frame	Wiring Diagram Number	Weight Lbs (kg) ②	Weathershield	Catalog Number
15	2 at +2.5%	4 at –2.5%	DT-3	150	912D	284B	220 (100)	**WS38**	**V48M22E15EE**
30	2 at +2.5%	4 at –2.5%	DT-3	150	912D	284B	293 (133)	**WS38**	**V48M22E30EE**
45	2 at +2.5%	4 at –2.5%	DT-3	150	912D	284B	348 (158)	**WS38**	**V48M22E45EE**
75	2 at +2.5%	4 at –2.5%	DT-3	150	914F	284B	554 (252)	**WS39**	**V48M22E75EE**
112.5	2 at +2.5%	4 at –2.5%	DT-3	150	916A	284B	820 (372)	**WS19**	**V48M22E12EE**
150	2 at +2.5%	4 at –2.5%	DT-3	150	916A	284B	940 (427)	**WS19**	**V48M22E49EE**
225	2 at +2.5%	4 at –2.5%	DT-3	150	917	284B	1421 (645)	**WS34**	**V48M22E22EE**
300	2 at +2.5%	4 at –2.5%	DT-3	150	923	284B	1787 (811)	**WS37**	**V48M22E33EE**
500	2 at +2.5%	4 at –2.5%	DT-3	150	919E	293A	2504 (1137)	**WS35**	**V48M22E55EE**
15	2 at +2.5%	4 at –2.5%	DT-3	115	912D	284B	231 (105)	**WS38**	**V48M22F15EEES**
30	2 at +2.5%	4 at –2.5%	DT-3	115	912D	284B	326 (148)	**WS38**	**V48M22F30EEES**
45	2 at +2.5%	4 at –2.5%	DT-3	115	912D	284B	397 (180)	**WS38**	**V48M22F45EEES**
75	2 at +2.5%	4 at –2.5%	DT-3	115	914F	284B	615 (279)	**WS39**	**V48M22F75EEES**
112.5	2 at +2.5%	4 at –2.5%	DT-3	115	916A	284B	805 (365)	**WS19**	**V48M22F12EEES**
150	2 at +2.5%	4 at –2.5%	DT-3	115	916A	284B	1012 (459)	**WS19**	**V48M22F49EEES**
225	2 at +2.5%	4 at –2.5%	DT-3	115	918A	284B	1589 (721)	**WS34**	**V48M22F22EEES**
300	2 at +2.5%	4 at –2.5%	DT-3	115	923	284B	1782 (809)	**WS37**	**V48M22F33EEES**
500	2 at +2.5%	4 at –2.5%	DT-3	115	920E	293A	3117 (1415)	**WS35**	**V48M22F55EEES**
15	2 at +2.5%	4 at –2.5%	DT-3	80	912D	284B	294 (133)	**WS38**	**V48M22B15EEES**
30	2 at +2.5%	4 at –2.5%	DT-3	80	912D	284B	374 (170)	**WS38**	**V48M22B30EEES**
45	2 at +2.5%	4 at –2.5%	DT-3	80	914F	284B	586 (266)	**WS39**	**V48M22B45EEES**
75	2 at +2.5%	4 at –2.5%	DT-3	80	916A	284B	807 (366)	**WS19**	**V48M22B75EEES**
112.5	2 at +2.5%	4 at –2.5%	DT-3	80	916A	284B	1005 (456)	**WS19**	**V48M22B12EEES**
150	2 at +2.5%	4 at –2.5%	DT-3	80	917	284B	1170 (531)	**WS34**	**V48M22B49EEES**
225	2 at +2.5%	4 at –2.5%	DT-3	80	923	284B	1764 (801)	**WS37**	**V48M22B22EEES**
300	2 at +2.5%	4 at –2.5%	DT-3	80	919E	293A	2317 (1052)	**WS35**	**V48M22B33EEES**

Notes

① Lighting tap limited to 5% of nameplate full load capacity.

② Weights subject to change.

For other ratings or catalog numbers not shown, or for special enclosure types (including stainless steel), refer to Eaton. Frame drawings/dimensions information begins on **Page V2-T2-216**.

Three-Phase—Type DT-3 60 Hz NEMA TP-1 Energy-Efficient Electrostatically Shielded—Aluminum Windings

480 Delta Volts to 480Y/277 Volts

kVA	Full Capacity Taps FCAN	FCBN	Type	°C Temp. Rise	Frame	Wiring Diagram Number	Weight Lbs (kg) ①	Weathershield	Catalog Number
15	2 at +2.5%	4 at –2.5%	DT-3	150	912D	283B	220 (100)	**WS38**	**V48M47E15EE**
30	2 at +2.5%	4 at –2.5%	DT-3	150	912D	283B	293 (133)	**WS38**	**V48M47E30EE**
45	2 at +2.5%	4 at –2.5%	DT-3	150	912D	283B	398 (181)	**WS38**	**V48M47E45EE**
75	2 at +2.5%	4 at –2.5%	DT-3	150	914F	283B	554 (252)	**WS39**	**V48M47E75EE**
112.5	2 at +2.5%	4 at –2.5%	DT-3	150	916A	283B	820 (372)	**WS19**	**V48M47E12EE**
150	2 at +2.5%	4 at –2.5%	DT-3	150	916A	283B	940 (427)	**WS19**	**V48M47E49EE**
225	2 at +2.5%	4 at –2.5%	DT-3	150	917	283B	1421 (645)	**WS34**	**V48M47E22EE**
300	2 at +2.5%	4 at –2.5%	DT-3	150	923	283B	1735 (788)	**WS34**	**V48M47E33EE**
500	2 at +2.5%	4 at –2.5%	DT-3	150	919E	292A	2504 (1137)	**WS35**	**V48M47E55EE**
15	2 at +2.5%	4 at –2.5%	DT-3	115	912D	283B	231 (105)	**WS38**	**V48M47F15EEES**
30	2 at +2.5%	4 at –2.5%	DT-3	115	912D	283B	326 (148)	**WS38**	**V48M47F30EEES**
45	2 at +2.5%	4 at –2.5%	DT-3	115	912D	283B	397 (180)	**WS38**	**V48M47F45EEES**
75	2 at +2.5%	4 at –2.5%	DT-3	115	914F	283B	615 (279)	**WS39**	**V48M47F75EEES**
112.5	2 at +2.5%	4 at –2.5%	DT-3	115	916A	283B	805 (365)	**WS19**	**V48M47F12EEES**
150	2 at +2.5%	4 at –2.5%	DT-3	115	916A	283B	1012 (459)	**WS19**	**V48M47F49EEES**
225	2 at +2.5%	4 at –2.5%	DT-3	115	918A	283B	1589 (721)	**WS34**	**V48M47F22EEES**
300	2 at +2.5%	4 at –2.5%	DT-3	115	923	283B	1782 (809)	**WS37**	**V48M47F33EEES**
500	2 at +2.5%	4 at –2.5%	DT-3	115	920E	292A	3117 (1415)	**WS35**	**V48M47F55EEES**
15	2 at +2.5%	4 at –2.5%	DT-3	80	912D	283B	294 (133)	**WS38**	**V48M47B15EEES**
30	2 at +2.5%	4 at –2.5%	DT-3	80	912D	283B	374 (170)	**WS38**	**V48M47B30EEES**
45	2 at +2.5%	4 at –2.5%	DT-3	80	914F	283B	586 (266)	**WS39**	**V48M47B45EEES**
75	2 at +2.5%	4 at –2.5%	DT-3	80	916A	283B	807 (366)	**WS19**	**V48M47B75EEES**
112.5	2 at +2.5%	4 at –2.5%	DT-3	80	916A	283B	1005 (456)	**WS19**	**V48M47B12EEES**
150	2 at +2.5%	4 at –2.5%	DT-3	80	917	283B	1170 (531)	**WS34**	**V48M47B49EEES**
225	2 at +2.5%	4 at –2.5%	DT-3	80	923	283B	1764 (801)	**WS37**	**V48M47B22EEES**
300	2 at +2.5%	4 at –2.5%	DT-3	80	919E	292A	2317 (1052)	**WS35**	**V48M47B33EEES**

Notes

① Weights subject to change.

For other ratings or catalog numbers not shown, or for special enclosure types (including stainless steel), refer to Eaton. Frame drawings/dimensions information begins on **Page V2-T2-216**.

Three-Phase—Type DT-3 60 Hz NEMA TP-1 Energy-Efficient Electrostatically Shielded—Copper Windings

208 Delta Volts to 208Y/120 Volts

kVA	Full Capacity Taps FCAN	FCBN	Type	°C Temp. Rise	Frame	Wiring Diagram Number	Weight Lbs (kg) ①	Weathershield	Catalog Number
15	2 at +2.5%	4 at –2.5%	DT-3	150	912D	283A	262 (119)	**WS38**	**V29M28E15CUEE**
30	2 at +2.5%	4 at –2.5%	DT-3	150	912D	283A	351 (159)	**WS38**	**V29M28E30CUEE**
45	2 at +2.5%	4 at –2.5%	DT-3	150	912D	283A	453 (206)	**WS38**	**V29M28E45CUEE**
75	2 at +2.5%	4 at –2.5%	DT-3	150	914F	283A	526 (239)	**WS39**	**V29M28E75CUEE**
112.5	1 at +5%	2 at –5%	DT-3	150	916A	287A	930 (422)	**WS19**	**V29R28E12CUEE**
150	1 at +5%	2 at –5%	DT-3	150	916A	287A	1242 (564)	**WS19**	**V29R28E49CUEE**
225	1 at +5%	2 at –5%	DT-3	150	917	287A	1900 (863)	**WS34**	**V29R28E22CUEE**
300	1 at +5%	2 at –5%	DT-3	150	918A	287A	2300 (1044)	**WS34**	**V29R28E33CUEE**
500	1 at +5%	2 at –5%	DT-3	150	919E	287A	3590 (1630)	**WS35**	**V29R28E55CUEE**
15	2 at +2.5%	4 at –2.5%	DT-3	115	912D	283A	266 (121)	**WS38**	**V29M28F15CUEEES**
30	2 at +2.5%	4 at –2.5%	DT-3	115	912D	283A	476 (215)	**WS38**	**V29M28F30CUEEES**
45	2 at +2.5%	4 at –2.5%	DT-3	115	912D	283A	475 (216)	**WS38**	**V29M28F45CUEEES**
75	2 at +2.5%	4 at –2.5%	DT-3	115	914F	287A	700 (318)	**WS39**	**V29M28F75CUEEES**
112.5	1 at +5%	2 at –5%	DT-3	115	916A	287A	935 (424)	**WS19**	**V29R28F12CUEEES**
150	1 at +5%	2 at –5%	DT-3	115	916A	287A	1274 (578)	**WS19**	**V29R28F49CUEEES**
225	1 at +5%	2 at –5%	DT-3	115	917	287A	1743 (791)	**WS34**	**V29R28F22CUEEES**
300	1 at +5%	2 at –5%	DT-3	115	919E	287A	2350 (1067)	**WS35**	**V29R28F33CUEEES**
500	1 at +5%	2 at –5%	DT-3	115	920E	287A	3690 (1675)	**WS35**	**V29R28F55CUEEES**
15	2 at +2.5%	4 at –2.5%	DT-3	80	912D	283A	381 (173)	**WS38**	**V29M28B15CUEEES**
30	2 at +2.5%	4 at –2.5%	DT-3	80	912D	283A	420 (191)	**WS38**	**V29M28B30CUEEES**
45	2 at +2.5%	4 at –2.5%	DT-3	80	912D	283A	510 (232)	**WS38**	**V29M28B45CUEEES**
75	2 at +2.5%	4 at –2.5%	DT-3	80	914F	283A	940 (427)	**WS39**	**V29M28B75CUEEES**
112.5	2 at +2.5%	4 at –2.5%	DT-3	80	916A	283A	1300 (590)	**WS19**	**V29M28B12CUEEES**
150	1 at +5%	2 at –5%	DT-3	80	918A	287A	1800 (817)	**WS34**	**V29R28B49CUEEES**
225	1 at +5%	2 at –5%	DT-3	80	919E	287A	2400 (1090)	**WS35**	**V29R28B22CUEEES**
300	1 at +5%	2 at –5%	DT-3	80	920E	287A	3800 (1725)	**WS35**	**V29R28B33CUEEES**

Notes

① Weights subject to change.

For other ratings or catalog numbers not shown, or for special enclosure types (including stainless steel), refer to Eaton. Frame drawings/dimensions information begins on **Page V2-T2-216**.

Three-Phase—Type DT-3 60 Hz NEMA TP-1 Energy-Efficient Electrostatically Shielded—Copper Windings

208 Delta Volts to 480Y/277 Volts

kVA	Full Capacity Taps FCAN	FCBN	Type	°C Temp. Rise	Frame	Wiring Diagram Number	Weight Lbs (kg) ①	Weathershield	Catalog Number
15	2 at +2.5%	4 at –2.5%	DT-3	150	912D	345A	236 (107)	**WS38**	**V29M47E15CUEE**
30	2 at +2.5%	4 at –2.5%	DT-3	150	912D	345A	351 (159)	**WS38**	**V29M47E30CUEE**
45	2 at +2.5%	4 at –2.5%	DT-3	150	912D	345A	453 (206)	**WS38**	**V29M47E45CUEE**
75	2 at +2.5%	4 at –2.5%	DT-3	150	914F	345A	687 (312)	**WS39**	**V29M47E75CUEE**
112.5	2 at +2.5%	4 at –2.5%	DT-3	150	916A	315A	930 (422)	**WS19**	**V29R47E12CUEE**
150	1 at +5%	2 at –5%	DT-3	150	916A	315A	1242 (564)	**WS19**	**V29R47E49CUEE**
225	1 at +5%	2 at –5%	DT-3	150	917	315A	1763 (800)	**WS34**	**V29R47E22CUEE**
300	1 at +5%	2 at –5%	DT-3	150	918A	315A	2300 (1044)	**WS34**	**V29R47E33CUEE**
500	1 at +5%	2 at –5%	DT-3	150	919E	315A	3590 (1630)	**WS35**	**V29R47E55CUEE**
15	2 at +2.5%	4 at –2.5%	DT-3	115	912D	345A	265 (120)	**WS38**	**V29M47F15CUEEES**
30	2 at +2.5%	4 at –2.5%	DT-3	115	912D	345A	475 (215)	**WS38**	**V29M47F30CUEEES**
45	2 at +2.5%	4 at –2.5%	DT-3	115	912D	345A	475 (216)	**WS38**	**V29M47F45CUEEES**
75	2 at +2.5%	4 at –2.5%	DT-3	115	914F	345A	768 (349)	**WS39**	**V29M47F75CUEEES**
112.5	2 at +2.5%	4 at –2.5%	DT-3	115	916A	345A	935 (424)	**WS19**	**V29M47F12CUEEES**
150	1 at +5%	2 at –5%	DT-3	115	916A	315A	1274 (578)	**WS19**	**V29R47F49CUEEES**
225	1 at +5%	2 at –5%	DT-3	115	917	315A	1743 (791)	**WS34**	**V29R47F22CUEEES**
300	1 at +5%	2 at –5%	DT-3	115	919E	315A	2350 (1067)	**WS35**	**V29R47F33CUEEES**
500	1 at +5%	2 at –5%	DT-3	115	920E	315A	3690 (1675)	**WS35**	**V29R47F55CUEEES**
15	2 at +2.5%	4 at –2.5%	DT-3	80	912D	345A	381 (173)	**WS38**	**V29M47B15CUEEES**
30	2 at +2.5%	4 at –2.5%	DT-3	80	912D	345A	420 (191)	**WS38**	**V29M47B30CUEEES**
45	2 at +2.5%	4 at –2.5%	DT-3	80	912D	345A	510 (232)	**WS38**	**V29M47B45CUEEES**
75	1 at +5%	2 at –5%	DT-3	80	914F	315A	940 (427)	**WS39**	**V29R47B75CUEEES**
112.5	1 at +5%	2 at –5%	DT-3	80	916A	315A	1300 (590)	**WS19**	**V29R47B12CUEEES**
150	1 at +5%	2 at –5%	DT-3	80	918A	315A	1800 (817)	**WS34**	**V29R47B49CUEEES**
225	1at +5%	2 at –5%	DT-3	80	919E	315A	2400 (1090)	**WS35**	**V29R47B22CUEEES**
300	1 at +5%	2 at –5%	DT-3	80	920E	315A	3800 (1725)	**WS35**	**V29R47B33CUEEES**

Notes

① Weights subject to change.

For other ratings or catalog numbers not shown, or for special enclosure types (including stainless steel), refer to Eaton. Frame drawings/dimensions information begins on **Page V2-T2-216**.

Three-Phase—Type DT-3 60 Hz NEMA TP-1 Energy-Efficient Electrostatically Shielded—Copper Windings

240 Delta Volts to 208Y/120 Volts

kVA	Full Capacity Taps FCAN	FCBN	Type	°C Temp. Rise	Frame	Wiring Diagram Number	Weight Lbs (kg) ①	Weathershield	Catalog Number
15	2 at +2.5%	4 at –2.5%	DT-3	150	912D	283G	262 (119)	**WS38**	**V24M28E15CUEE**
30	2 at +2.5%	4 at –2.5%	DT-3	150	912D	283G	351 (159)	**WS38**	**V24M28E30CUEE**
45	2 at +2.5%	4 at –2.5%	DT-3	150	912D	283G	453 (206)	**WS38**	**V24M28E45CUEE**
75	2 at +2.5%	4 at –2.5%	DT-3	150	914F	283G	526 (239)	**WS39**	**V24M28E75CUEE**
112.5	2 at +2.5%	4 at –2.5%	DT-3	150	916A	283G	930 (422)	**WS19**	**V24M28E12CUEE**
150	2 at +2.5%	4 at –2.5%	DT-3	150	916A	283G	1242 (564)	**WS19**	**V24M28E49CUEE**
225	1 at +5%	2 at –5%	DT-3	150	917	287B	1900 (863)	**WS34**	**V24R28E22CUEE**
300	1 at +5%	2 at –5%	DT-3	150	918A	287B	2300 (1044)	**WS34**	**V24R28E33CUEE**
500	1 at +5%	2 at –5%	DT-3	150	919E	287B	3590 (1630)	**WS35**	**V24R28E55CUEE**
15	2 at +2.5%	4 at –2.5%	DT-3	115	912D	283G	266 (121)	**WS38**	**V24M28F15CUEEES**
30	2 at +2.5%	4 at –2.5%	DT-3	115	912D	283G	475 (215)	**WS38**	**V24M28F30CUEEES**
45	2 at +2.5%	4 at –2.5%	DT-3	115	912D	283G	475 (216)	**WS38**	**V24M28F45CUEEES**
75	2 at +2.5%	4 at –2.5%	DT-3	115	914F	283G	700 (318)	**WS39**	**V24M28F75CUEEES**
112.5	2 at +2.5%	4 at –2.5%	DT-3	115	916A	283G	935 (424)	**WS19**	**V24M28F12CUEEES**
150	1 at +5%	2 at –5%	DT-3	115	916A	287B	1274 (578)	**WS19**	**V24R28F49CUEEES**
225	1 at +5%	2 at –5%	DT-3	115	917	287B	1743 (791)	**WS34**	**V24R28F22CUEEES**
300	1 at +5%	2 at –5%	DT-3	115	918A	287B	2350 (1067)	**WS34**	**V24R28F33CUEEES**
500	1 at +5%	2 at –5%	DT-3	115	919E	287B	3690 (1675)	**WS35**	**V24R28F55CUEEES**
15	2 at +2.5%	4 at –2.5%	DT-3	80	912D	283G	381 (173)	**WS38**	**V24M28B15CUEEES**
30	2 at +2.5%	4 at –2.5%	DT-3	80	912D	283G	420 (191)	**WS38**	**V24M28B30CUEEES**
45	2 at +2.5%	4 at –2.5%	DT-3	80	914F	283G	510 (232)	**WS39**	**V24M28B45CUEEES**
75	2 at +2.5%	4 at –2.5%	DT-3	80	916A	283G	940 (427)	**WS19**	**V24M28B75CUEEES**
112.5	1 at +5%	2 at –5%	DT-3	80	916A	287B	1300 (590)	**WS19**	**V24R28B12CUEEES**
150	1 at +5%	2 at –5%	DT-3	80	917	287B	1800 (817)	**WS34**	**V24R28B49CUEEES**
225	1 at +5%	2 at –5%	DT-3	80	918A	287B	2400 (1090)	**WS34**	**V24R28B22CUEEES**
300	1 at +5%	2 at –5%	DT-3	80	919E	287B	3800 (1725)	**WS35**	**V24R28B33CUEEES**

Notes

① Weights subject to change.

For other ratings or catalog numbers not shown, or for special enclosure types (including stainless steel), refer to Eaton. Frame drawings/dimensions information begins on **Page V2-T2-216**.

Three-Phase—Type DT-3 60 Hz NEMA TP-1 Energy-Efficient Electrostatically Shielded—Copper Windings

240 Delta Volts to 480Y/277 Volts

kVA	Full Capacity Taps FCAN	FCBN	Type	°C Temp. Rise	Frame	Wiring Diagram Number	Weight Lbs (kg) ①	Weathershield	Catalog Number
15	2 at +2.5%	4 at –2.5%	DT-3	150	912D	345C	262 (119)	**WS38**	**V24M47E15CUEE**
30	2 at +2.5%	4 at –2.5%	DT-3	150	912D	345C	351 (159)	**WS38**	**V24M47E30CUEE**
45	2 at +2.5%	4 at –2.5%	DT-3	150	912D	345C	453 (206)	**WS38**	**V24M47E45CUEE**
75	2 at +2.5%	4 at –2.5%	DT-3	150	914F	345C	526 (239)	**WS39**	**V24M47E75CUEE**
112.5	2 at +2.5%	4 at –2.5%	DT-3	150	916A	345C	930 (422)	**WS19**	**V24M47E12CUEE**
150	2 at +2.5%	4 at –2.5%	DT-3	150	916A	345C	1242 (564)	**WS19**	**V24M47E49CUEE**
225	1 at +5%	2 at –5%	DT-3	150	918A	—	1900 (863)	**WS34**	**V24R47E22CUEE**
300	1 at +5%	2 at –5%	DT-3	150	919E	—	2300 (1044)	**WS35**	**V24R47E33CUEE**
500	1 at +5%	2 at –5%	DT-3	150	919E	—	3590 (1630)	**WS35**	**V24R47E55CUEE**
15	2 at +2.5%	4 at –2.5%	DT-3	115	912D	345C	266 (121)	**WS38**	**V24M47F15CUEEES**
30	2 at +2.5%	4 at –2.5%	DT-3	115	912D	345C	475 (215)	**WS38**	**V24M47F30CUEEES**
45	2 at +2.5%	4 at –2.5%	DT-3	115	912D	345C	475 (216)	**WS38**	**V24M47F45CUEEES**
75	2 at +2.5%	4 at –2.5%	DT-3	115	914F	345C	700 (318)	**WS39**	**V24M47F75CUEEES**
112.5	1 at +5%	2 at –5%	DT-3	115	916A	—	935 (424)	**WS19**	**V24R47F12CUEEES**
150	1 at +5%	2 at –5%	DT-3	115	916A	—	1274 (578)	**WS19**	**V24R47F49CUEEES**
225	1 at +5%	2 at –5%	DT-3	115	918A	—	1743 (791)	**WS34**	**V24R47F22CUEEES**
300	1 at +5%	2 at –5%	DT-3	115	919E	—	2350 (1067)	**WS35**	**V24R47F33CUEEES**
500	1 at +5%	2 at –5%	DT-3	115	919E	—	3690 (1675)	**WS35**	**V24R47F55CUEEES**
15	2 at +2.5%	4 at –2.5%	DT-3	80	912D	345C	381 (173)	**WS38**	**V24M47B15CUEEES**
30	2 at +2.5%	4 at –2.5%	DT-3	80	912D	345C	420 (191)	**WS38**	**V24M47B30CUEEES**
45	2 at +2.5%	4 at –2.5%	DT-3	80	914F	345C	510 (232)	**WS39**	**V24M47B45CUEEES**
75	2 at +2.5%	4 at –2.5%	DT-3	80	916A	345C	940 (427)	**WS19**	**V24M47B75CUEEES**
112.5	1 at +5%	2 at –5%	DT-3	80	916A	—	1300 (590)	**WS19**	**V24R47B12CUEEES**
150	1 at +5%	2 at –5%	DT-3	80	918A	—	1800 (817)	**WS34**	**V24R47B49CUEEES**
225	1 at +5%	2 at –5%	DT-3	80	919E	—	2400 (1090)	**WS35**	**V24R47B22CUEEES**
300	1 at +5%	2 at –5%	DT-3	80	919E	—	3800 (1725)	**WS35**	**V24R47B33CUEEES**

Notes

① Weights subject to change.

For other ratings or catalog numbers not shown, or for special enclosure types (including stainless steel), refer to Eaton. Frame drawings/dimensions information begins on **Page V2-T2-216**.

Three-Phase—Type DT-3 60 Hz NEMA TP-1 Energy-Efficient Electrostatically Shielded—Copper Windings

440 Delta Volts to 220Y/127 Volts

kVA	Full Capacity Taps FCAN	FCBN	Type	°C Temp. Rise	Frame	Wiring Diagram Number	Weight Lbs (kg) ①	Weathershield	Catalog Number
15	2 at +2.5%	4 at –2.5%	DT-3	150	912D	283Q	251 (114)	**WS38**	**V44M31E15CUEE**
30	2 at +2.5%	4 at –2.5%	DT-3	150	912D	283Q	353 (160)	**WS38**	**V44M31E30CUEE**
45	2 at +2.5%	4 at –2.5%	DT-3	150	912D	283Q	421 (191)	**WS38**	**V44M31E45CUEE**
75	2 at +2.5%	4 at –2.5%	DT-3	150	914F	283Q	648 (294)	**WS39**	**V44M31E75CUEE**
112.5	2 at +2.5%	4 at –2.5%	DT-3	150	916A	283Q	910 (413)	**WS19**	**V44M31E12CUEE**
150	2 at +2.5%	4 at –2.5%	DT-3	150	916A	283Q	1052 (478)	**WS19**	**V44M31E49CUEE**
225	2 at +2.5%	4 at –2.5%	DT-3	150	917	283Q	1548 (703)	**WS34**	**V44M31E22CUEE**
300	2 at +2.5%	4 at –2.5%	DT-3	150	923	283Q	2029 (921)	**WS37**	**V44M31E33CUEE**
500	2 at +2.5%	4 at –2.5%	DT-3	150	919E	283Q	3680 (1671)	**WS35**	**V44M31E55CUEE**
15	2 at +2.5%	4 at –2.5%	DT-3	115	912D	283Q	239 (109)	**WS38**	**V44M31F15CUEEES**
30	2 at +2.5%	4 at –2.5%	DT-3	115	912D	283Q	363 (165)	**WS38**	**V44M31F30CUEEES**
45	2 at +2.5%	4 at –2.5%	DT-3	115	912D	283Q	442 (201)	**WS38**	**V44M31F45CUEEES**
75	2 at +2.5%	4 at –2.5%	DT-3	115	914F	283Q	676 (307)	**WS39**	**V44M31F75CUEEES**
112.5	2 at +2.5%	4 at –2.5%	DT-3	115	916A	283Q	926 (420)	**WS19**	**V44M31F12CUEEES**
150	2 at +2.5%	4 at –2.5%	DT-3	115	916A	283Q	1246 (566)	**WS19**	**V44M31F49CUEEES**
225	2 at +2.5%	4 at –2.5%	DT-3	115	917	283Q	1692 (768)	**WS34**	**V44M31F22CUEEES**
500	2 at +2.5%	4 at –2.5%	DT-3	115	923	283Q	2325 (1056)	**WS37**	**V44M31F33CUEEES**
500	2 at +2.5%	4 at –2.5%	DT-3	115	919E	283Q	3646 (1655)	**WS35**	**V44M31F55CUEEES**
15	2 at +2.5%	4 at –2.5%	DT-3	80	912D	283Q	331 (150)	**WS38**	**V44M31B15CUEEES**
30	2 at +2.5%	4 at –2.5%	DT-3	80	912D	283Q	390 (177)	**WS38**	**V44M31B30CUEEES**
45	2 at +2.5%	4 at –2.5%	DT-3	80	912D	283Q	545 (247)	**WS38**	**V44M31B45CUEEES**
75	2 at +2.5%	4 at –2.5%	DT-3	80	916A	283Q	956 (434)	**WS19**	**V44M31B75CUEEES**
112.5	2 at +2.5%	4 at –2.5%	DT-3	80	916A	283Q	1045 (474)	**WS19**	**V44M31B12CUEEES**
150	2 at +2.5%	4 at –2.5%	DT-3	80	917	283Q	1425 (647)	**WS34**	**V44M31B49CUEEES**
225	2 at +2.5%	4 at –2.5%	DT-3	80	923	283Q	2082 (945)	**WS37**	**V44M31B22CUEEES**
300	2 at +2.5%	4 at –2.5%	DT-3	80	919E	283Q	3283 (1490)	**WS35**	**V44M31B33CUEEES**

Notes

① Weights subject to change.

For other ratings or catalog numbers not shown, or for special enclosure types (including stainless steel), refer to Eaton. Frame drawings/dimensions information begins on **Page V2-T2-216**.

Three-Phase—Type DT-3 60 Hz NEMA TP-1 Energy-Efficient Electrostatically Shielded—Copper Windings

480 Delta Volts to 208Y/120 Volts

kVA	Full Capacity Taps FCAN	FCBN	Type	°C Temp. Rise	Frame	Wiring Diagram Number	Weight Lbs (kg) ①	Weathershield	Catalog Number
15	2 at +2.5%	4 at –2.5%	DT-3	150	912D	283B	251 (114)	**WS38**	**V48M28E15CUEE**
30	2 at +2.5%	4 at –2.5%	DT-3	150	912D	283B	353 (160)	**WS38**	**V48M28E30CUEE**
37.5	2 at +2.5%	4 at –2.5%	DT-3	150	912D	283B	415 (188)	**WS38**	**V48M28E37CUEE**
45	2 at +2.5%	4 at –2.5%	DT-3	150	912D	283B	421 (191)	**WS38**	**V48M28E45CUEE**
50	2 at +2.5%	4 at –2.5%	DT-3	150	914F	283B	647 (294)	**WS39**	**V48M28E50CUEE**
75	2 at +2.5%	4 at –2.5%	DT-3	150	914F	283B	648 (294)	**WS39**	**V48M28E75CUEE**
112.5	2 at +2.5%	4 at –2.5%	DT-3	150	916A	283B	910 (413)	**WS19**	**V48M28E12CUEE**
150	2 at +2.5%	4 at –2.5%	DT-3	150	916A	283B	1052 (478)	**WS19**	**V48M28E49CUEE**
225	2 at +2.5%	4 at –2.5%	DT-3	150	928	658B	1548 (703)	**WS41**	**V48M28E22CUEE**
300	2 at +2.5%	4 at –2.5%	DT-3	150	929	658B	1622 (737)	**WS42**	**V48M28E33CUEE**
500	2 at +2.5%	2 at –2.5%	DT-3	150	924	292A	3680 (1671)	**WS40**	**V48D28E55CUEE**
750	2 at +2.5%	4 at –2.5%	DT-3	150	920E	292A	4890 (2220)	**WS35**	**V48M28E77CUEE**
15	2 at +2.5%	4 at –2.5%	DT-3	115	912D	283B	239 (109)	**WS38**	**V48M28F15CUEEES**
30	2 at +2.5%	4 at –2.5%	DT-3	115	912D	283B	363 (165)	**WS38**	**V48M28F30CUEEES**
45	2 at +2.5%	4 at –2.5%	DT-3	115	912D	283B	442 (201)	**WS38**	**V48M28F45CUEEES**
75	2 at +2.5%	4 at –2.5%	DT-3	115	914F	283B	676 (307)	**WS39**	**V48M28F75CUEEES**
112.5	2 at +2.5%	4 at –2.5%	DT-3	115	916A	283B	926 (420)	**WS19**	**V48M28F12CUEEES**
150	2 at +2.5%	4 at –2.5%	DT-3	115	916A	283B	1246 (566)	**WS19**	**V48M28F49CUEEES**
225	2 at +2.5%	4 at –2.5%	DT-3	115	917	292A	1692 (768)	**WS34**	**V48M28F22CUEEES**
300	2 at +2.5%	4 at –2.5%	DT-3	115	923	292A	2325 (1056)	**WS37**	**V48M28F33CUEEES**
500	2 at +2.5%	4 at –2.5%	DT-3	115	919E	292A	3646 (1655)	**WS35**	**V48M28F55CUEEES**
15	2 at +2.5%	4 at –2.5%	DT-3	80	912D	283B	331 (150)	**WS38**	**V48M28B15CUEEES**
30	2 at +2.5%	4 at –2.5%	DT-3	80	912D	283B	390 (177)	**WS38**	**V48M28B30CUEEES**
45	2 at +2.5%	4 at –2.5%	DT-3	80	912D	283B	545 (248)	**WS38**	**V48M28B45CUEEES**
75	2 at +2.5%	4 at –2.5%	DT-3	80	916A	283B	956 (434)	**WS19**	**V48M28B75CUEEES**
112.5	2 at +2.5%	4 at –2.5%	DT-3	80	916A	283B	1045 (474)	**WS19**	**V48M28B12CUEEES**
150	2 at +2.5%	4 at –2.5%	DT-3	80	917	292A	1425 (647)	**WS34**	**V48M28B49CUEEES**
225	2 at +2.5%	4 at –2.5%	DT-3	80	923	292A	2082 (945)	**WS37**	**V48M28B22CUEEES**
300	2 at +2.5%	4 at– 2.5%	DT-3	80	919E	292A	3283 (1490)	**WS35**	**V48M28B33CUEEES**
500	2 at +2.5%	4 at –2.5%	DT-3	80	920E	292A	4800 (2179)	**WS35**	**V48M28B55CUEEES**

Notes

① Weights subject to change.

For other ratings or catalog numbers not shown, or for special enclosure types (including stainless steel), refer to Eaton. Frame drawings/dimensions information begins on **Page V2-T2-216**.

Three-Phase—Type DT-3 60 Hz NEMA TP-1 Energy-Efficient Electrostatically Shielded—Copper Windings

480 Delta Volts to 240 Delta Volts with 120 Volt Lighting Tap on Phase B ①

kVA	Full Capacity Taps FCAN	FCBN	Type	°C Temp. Rise	Frame	Wiring Diagram Number	Weight Lbs (kg) ②	Weathershield	Catalog Number
15	2 at +2.5%	4 at –2.5%	DT-3	150	912D	284B	253 (115)	**WS38**	**V48M22E15CUEE**
30	2 at +2.5%	4 at –2.5%	DT-3	150	912D	284B	352 (160)	**WS38**	**V48M22E30CUEE**
45	2 at +2.5%	4 at –2.5%	DT-3	150	912D	284B	415 (188)	**WS38**	**V48M22E45CUEE**
75	2 at +2.5%	4 at –2.5%	DT-3	150	914F	284B	703 (319)	**WS39**	**V48M22E75CUEE**
112.5	2 at +2.5%	4 at –2.5%	DT-3	150	916A	284B	935 (424)	**WS19**	**V48M22E12CUEE**
150	2 at +2.5%	4 at –2.5%	DT-3	150	916A	284B	1134 (515)	**WS19**	**V48M22E49CUEE**
225	2 at +2.5%	4 at –2.5%	DT-3	150	917	284B	1955 (888)	**WS34**	**V48M22E22CUEE**
300	2 at +2.5%	4 at –2.5%	DT-3	150	923	284B	2450 (1112)	**WS37**	**V48M22E33CUEE**
500	2 at +2.5%	4 at –2.5%	DT-3	150	919E	293A	3547 (1610)	**WS35**	**V48M22E55CUEE**
15	2 at +2.5%	4 at –2.5%	DT-3	115	912D	284B	248 (113)	**WS38**	**V48M22F15CUEEES**
30	2 at +2.5%	4 at –2.5%	DT-3	115	912D	284B	410 (186)	**WS38**	**V48M22F30CUEEES**
45	2 at +2.5%	4 at –2.5%	DT-3	115	912D	284B	445 (202)	**WS38**	**V48M22F45CUEEES**
75	2 at +2.5%	4 at –2.5%	DT-3	115	914F	284B	750 (341)	**WS39**	**V48M22F75CUEEES**
112.5	2 at +2.5%	4 at –2.5%	DT-3	115	916A	284B	963 (437)	**WS19**	**V48M22F12CUEEES**
150	2 at +2.5%	4 at –2.5%	DT-3	115	916A	284B	1236 (561)	**WS19**	**V48M22F49CUEEES**
225	2 at +2.5%	4 at –2.5%	DT-3	115	917	284B	2100 (953)	**WS34**	**V48M22F22CUEEES**
300	2 at +2.5%	4 at –2.5%	DT-3	115	923	284B	2600 (1180)	**WS37**	**V48M22F33CUEEES**
500	2 at +2.5%	4 at –2.5%	DT-3	115	919E	293A	3700 (1680)	**WS35**	**V48M22F55CUEEES**
15	2 at +2.5%	4 at –2.5%	DT-3	80	912D	284B	247 (113)	**WS38**	**V48M22B15CUEEES**
30	2 at +2.5%	4 at –2.5%	DT-3	80	912D	284B	460 (209)	**WS38**	**V48M22B30CUEEES**
45	2 at +2.5%	4 at –2.5%	DT-3	80	912D	284B	505 (229)	**WS38**	**V48M22B45CUEEES**
75	2 at +2.5%	4 at –2.5%	DT-3	80	916A	284B	835 (379)	**WS19**	**V48M22B75CUEEES**
112.5	2 at +2.5%	4 at –2.5%	DT-3	80	916A	284B	1050 (477)	**WS19**	**V48M22B12CUEEES**
150	2 at +2.5%	4 at –2.5%	DT-3	80	917	284B	2250 (1022)	**WS34**	**V48M22B49CUEEES**
225	2 at +2.5%	4 at –2.5%	DT-3	80	923	284B	2900 (1317)	**WS37**	**V48M22B22CUEEES**
300	2 at +2.5%	4 at –2.5%	DT-3	80	919E	293A	4000 (1816)	**WS35**	**V48M22B33CUEEES**

Notes

① Lighting tap limited to 5% of nameplate full load capacity.

② Weights subject to change.

For other ratings or catalog numbers not shown, or for special enclosure types (including stainless steel), refer to Eaton. Frame drawings/dimensions information begins on **Page V2-T2-216**.

Three-Phase—Type DT-3 60 Hz NEMA TP-1 Energy-Efficient Electrostatically Shielded—Copper Windings

480 Delta Volts to 480Y/277 Volts

kVA	Full Capacity Taps FCAN	FCBN	Type	°C Temp. Rise	Frame	Wiring Diagram Number	Weight Lbs (kg) ①	Weathershield	Catalog Number
15	2 at +2.5%	4 at –2.5%	DT-3	150	912D	283B	340 (154)	**WS38**	**V48M47E15CUEE**
30	2 at +2.5%	4 at –2.5%	DT-3	150	912D	283B	340 (154)	**WS38**	**V48M47E30CUEE**
45	2 at +2.5%	4 at –2.5%	DT-3	150	912D	283B	430 (195)	**WS38**	**V48M47E45CUEE**
75	2 at +2.5%	4 at –2.5%	DT-3	150	914F	283B	677 (307)	**WS39**	**V48M47E75CUEE**
112.5	2 at +2.5%	4 at –2.5%	DT-3	150	916A	283B	900 (409)	**WS19**	**V48M47E12CUEE**
150	2 at +2.5%	4 at –2.5%	DT-3	150	916A	283B	1132 (514)	**WS19**	**V48M47E49CUEE**
225	2 at +2.5%	4 at –2.5%	DT-3	150	917	283B	1550 (704)	**WS34**	**V48M47E22CUEE**
300	2 at +2.5%	4 at –2.5%	DT-3	150	923	283B	2550 (1158)	**WS37**	**V48M47E33CUEE**
500	2 at +2.5%	4 at –2.5%	DT-3	150	919E	292A	3412 (1549)	**WS35**	**V48M47E55CUEE**
15	2 at +2.5%	4 at –2.5%	DT-3	115	912D	283B	258 (117)	**WS38**	**V48M47F15CUEEES**
30	2 at +2.5%	4 at –2.5%	DT-3	115	912D	283B	426 (193)	**WS38**	**V48M47F30CUEEES**
45	2 at +2.5%	4 at –2.5%	DT-3	115	912D	283B	446 (202)	**WS38**	**V48M47F45CUEEES**
75	2 at +2.5%	4 at –2.5%	DT-3	115	914F	283B	666 (302)	**WS39**	**V48M47F75CUEEES**
112.5	2 at +2.5%	4 at –2.5%	DT-3	115	916A	283B	912 (414)	**WS19**	**V48M47F12CUEEES**
150	2 at +2.5%	4 at –2.5%	DT-3	115	917	283B	1600 (726)	**WS19**	**V48M47F49CUEEES**
225	2 at +2.5%	4 at –2.5%	DT-3	115	917	283B	2107 (957)	**WS34**	**V48M47F22CUEEES**
300	2 at +2.5%	4 at –2.5%	DT-3	115	923	283B	2418 (1098)	**WS37**	**V48M47F33CUEEES**
500	2 at +2.5%	4 at –2.5%	DT-3	115	919E	292A	3800 (1725)	**WS35**	**V48M47F55CUEEES**
15	2 at +2.5%	4 at –2.5%	DT-3	80	912D	283B	369 (168)	**WS38**	**V48M47B15CUEEES**
30	2 at +2.5%	4 at –2.5%	DT-3	80	912D	283B	430 (195)	**WS38**	**V48M47B30CUEEES**
45	2 at +2.5%	4 at –2.5%	DT-3	80	912D	283B	552 (251)	**WS38**	**V48M47B45CUEEES**
75	2 at +2.5%	4 at –2.5%	DT-3	80	916A	283B	920 (418)	**WS19**	**V48M47B75CUEEES**
112.5	2 at +2.5%	4 at –2.5%	DT-3	80	916A	283B	1210 (549)	**WS19**	**V48M47B12CUEEES**
150	2 at +2.5%	4 at –2.5%	DT-3	80	917	283B	1702 (773)	**WS34**	**V48M47B49CUEEES**
225	2 at +2.5%	4 at –2.5%	DT-3	80	923	283B	2313 (1050)	**WS37**	**V48M47B22CUEEES**
300	2 at +2.5%	4 at –2.5%	DT-3	80	919E	292A	3100 (1407)	**WS35**	**V48M47B22CUEEES**

Notes

① Weights subject to change.

For other ratings or catalog numbers not shown, or for special enclosure types (including stainless steel), refer to Eaton. Frame drawings/dimensions information begins on **Page V2-T2-216**.

Accessories

Please refer to Section 2.7 **Page V2-T2-191**.

Technical Data and Specifications

Frequency

Eaton standard dry-type distribution transformers are designed for 60 Hz operation. Transformers required for other frequencies are available and must be specifically designed.

Overload Capability

Short-term overload is designed into transformers as required by ANSI. Dry-type distribution transformers will deliver 200% nameplate load for one-half hour, 150% load for one hour and 125% load for four hours without being damaged, provided that a constant 50% load precedes and follows the overload. See ANSI C57.96-01.250 for additional limitations.

Continuous overload capacity is not deliberately designed into a transformer because the design objective is to be within the allowed winding temperature rise with nameplate loading.

Insulation System and Temperature Rise

Industry standards classify insulation systems and rise as shown below:

Insulation System Classification

Ambient	+ Winding Rise	+ Hot Spot	= Temp. Class
40°C	55°C	10°C	105°C
40°C	80°C	30°C	150°C
25°C	135°C	20°C	180°C
40°C	115°C	30°C	185°C
40°C	150°C	30°C	220°C

The design life of transformers having different insulation systems is the same—the lower-temperature systems are designed for the same life as the higher-temperature systems.

Enclosures

Eaton's ventilated transformers, Types DS-3 and DT-3, use a NEMA 2 rated (drip-proof) enclosure as standard, and are rated NEMA 3R with the addition of weathershields.

Winding Terminations

Primary and secondary windings are terminated in the wiring compartment. Encapsulated units have copper leads or stabs brought out for connections. Ventilated transformers have leads brought out to terminals that are pre-drilled to accept Cu/Al lugs. Aluminum-wound transformers have aluminum terminals; copper-wound models have copper terminals. **Lugs are not supplied with these transformers.** Eaton recommends external cables be rated 90°C (sized at 75°C ampacity) for encapsulated designs and 75°C for ventilated designs.

Series-Multiple Windings

Series-multiple windings consist of two similar coils in each winding that can be connected in series or parallel (multiple). Transformers with series-multiple windings are designated with an "x" or "/" between the voltage ratings, such as voltages of "120/240" or "240 x 480." If the series-multiple winding is designated by an "x," the winding can be connected only for a series or parallel. With the "/" designation, a mid-point also becomes available in addition to the series or parallel connection. As an example, a 120 x 240 winding can be connected for either 120 (parallel) or 240 (series), but a 120/240 winding can be connected for 120 (parallel), or 240 (series), or 240 with a 120 mid-point.

For additional information, please refer to Section 2.7 **Page V2-T2-191**.

Sound Levels

All Eaton 600 volt class general-purpose dry-type distribution transformers are designed to meet NEMA ST-20 sound levels listed here. These are the sound levels measured in a soundproof environment. Actual sound levels measured at an installation will likely be higher (as much as 15 dB greater) due to electrical connections and environmental conditions. Lower sound levels are available and should be specified when the transformer is going to be installed in an area where sound may be a concern.

Average Sound Levels

NEMA ST-20 Average Sound Level, dB

Equivalent Winding kVA Range	Self-Cooled Ventilated (up to 1.2 kV) K-Factor 1, 4, 9	Self-Cooled Ventilated (up to 1.2 kV) K-Factor 13, 20	Encapsulated (up to 1.2 kV)
3.00 and below	40	40	45
3.01 to 9.00	40	40	45
9.01 to 15.00	45	45	50
15.01 to 30.00	45	45	50
30.01 to 50.00	45	48	50
50.01 to 75.00	50	53	55
75.01 to 112.50	50	53	55
112.51 to 150.00	50	53	55
150.01 to 225.00	55	58	57
225.01 to 300.00	55	58	57
300.01 to 500.00	60	63	59
500.01 to 700.00	62	65	61
700.01 to 1000.00	64	67	63
Greater than 1000	Consult factory	Consult factory	Consult factory

Note

For other ratings or catalog numbers not shown, or for special enclosure types (including stainless steel), refer to Eaton.

K-Factor

Product Description

A common industry term for the amount of harmonics produced by a given load is the K-factor. The larger the K-factor, the more harmonics are present. Linear loads, for example, have a K-factor of 1. Transformers may carry a K-factor rating to define the transformer's ability to withstand the additional heating generated by harmonic currents.

Calculating the K-Factor

All nonlinear waveforms can be broken down mathematically into a fundamental frequency and its harmonics. IEEE C57.110 establishes a direct relationship between these harmonics and transformer heating. Underwriters Laboratories has established a similar relationship, the K-factor, which is derived by summing the square of the percentage current at a given harmonic level multiplied by the square of the harmonic order.

$K = {}^2(I_h)^2(h)^2$

Ih = Percent Current at Harmonic h

h = Harmonic Order, i.e., 3rd, 5th, 7th

For example, a load that is 90% of the fundamental, 30% of the third harmonic, and 20% of the fifth harmonic would yield $(.9)^2(1)^2 + (.3)^2(3)^2 + (.2)^2(5)^2$ or a K-factor of 2.62. This load would require an Eaton KT-4 transformer with a K-factor rating of 4.

Transformers that carry a K-factor rating define the transformer's ability to withstand a given harmonic load while operating within the transformer's insulation class.

An analysis of harmonic loads and a calculation of the K-factor must be made to properly apply transformers in any building or facility. Note that the calculated K-factor is not constant because nonlinear loads change throughout the day as equipment and lighting is turned off and on. These harmonic loads also change over the life of the building or facility as equipment is added or removed.

Harmonic Currents

Harmonic currents are found in nonlinear loads. These currents are generated by various types of equipment including switching mode power supplies that abruptly switch current on and off during each line cycle. Switching mode power supplies or diode-capacitor power supplies convert AC line voltage to low voltage DC. This process is accomplished by charging capacitors during each line cycle with narrow pluses of current that are time-coincident with line voltage peaks. Examples of this equipment include electronic ballasts for fluorescent lighting, personal computers, printers, fax machines, electronic and medical test equipment, uninterruptible power supplies, and solid-state motor drives.

Note: Nonlinear is synonymous with the term non-sinusoidal.

Harmonic Currents Found in Nonlinear Loads Cause Wave Shape Distortion and Create Added Stresses on Transformers

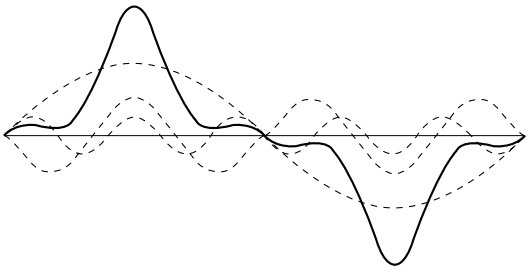

Features, Benefits and Functions

- 600 volt class standard
- Three-phase, 480 delta–208Y/120 volt standard
- Single-phase, 240 x 480 volt–120/240 volt standard
- 150°C rise standard, 80°C and 115°C available
- Three-phase neutrals sized for 200% of rated current
- Electrostatic shield

Note: Electrostatic shields do not reduce harmonic levels. However, because of the nature of switching mode loads, these shields do reduce transient noise in the system, which may affect sensitive computer loads.

- Aluminum windings (copper optional)
- Class 220°C insulation
- Reduced core flux density

Note: Reduced core flux prevents the core from saturation and overheating due to voltage distortions caused by harmonic currents.

- Indoor enclosures (weathershields optional, for outdoor applications)
- Coils designed to minimize stray losses
- K4, K13 standard
- K9, K20, K30, K40, K50 optional
- Low sound level (–3 dB, –5 dB) available as options
- Available with NEMA TP-1 efficiency levels

Standards and Certifications

- UL listed

Listed

Industry Standards

All Eaton dry-type distribution and control transformers are built and tested in accordance with applicable NEMA, ANSI and IEEE Standards. All 600 volt class transformers are UL listed unless otherwise noted.

Seismically Qualified

Eaton manufactured dry-type distribution transformers are seismically qualified and exceed requirements of the Uniform Building Code (UBC), International Building Code (IBC) and California Code Title 24.

Catalog Number Selection

Please refer to Section 2.7 **Page V2-T2-187**.

Product Selection

Single-Phase—K-Factor Rated 60 Hz NEMA TP-1 Energy-Efficient—Aluminum Windings

K-4 240 x 480 Volts to 120/240 Volts

kVA	Full Capacity Taps FCAN	FCBN	Type	°C Temp. Rise	Frame	Wiring Diagram Number	Weight Lbs (kg) ①	Weathershield	Catalog Number
15	②	②	DS-3	150	816	261A	222 (101)	**WS11**	**HT20P11S15EE**
25	②	②	DS-3	150	818	261A	360 (163)	**WS11**	**HT20P11S25EE**
37.5	②	②	DS-3	150	818	261A	365 (166)	**WS11**	**HT20P11S37EE**
50	②	②	DS-3	150	819	261A	560 (254)	**WS16**	**HT20P11S50EE**
75	②	②	DS-3	150	820	261A	688 (312)	**WS16**	**HT20P11S75EE**
15	②	②	DS-3	115	816	261A	229 (104)	**WS11**	**HT20P11F15EE**
25	②	②	DS-3	115	818	261A	365 (166)	**WS11**	**HT20P11F25EE**
37.5	②	②	DS-3	115	818	261A	380 (172)	**WS11**	**HT20P11F37EE**
50	②	②	DS-3	115	819	261A	580 (263)	**WS16**	**HT20P11F50EE**
75	②	②	DS-3	115	820	261A	700 (318)	**WS16**	**HT20P11F75EE**
15	②	②	DS-3	80	816	261A	—	**WS11**	**HT20P11B15EE**
25	②	②	DS-3	80	818	261A	—	**WS11**	**HT20P11B25EE**
37.5	②	②	DS-3	80	819	261A	—	**WS16**	**HT20P11B37EE**
50	②	②	DS-3	80	820	261A	—	**WS16**	**HT20P11B50EE**
75	②	②	DS-3	80	821	261A	976 (443)	**WS13**	**HT20P11B75EE**

K-13 240 x 480 Volts to 120/240 Volts

kVA	Full Capacity Taps FCAN	FCBN	Type	°C Temp. Rise	Frame	Wiring Diagram Number	Weight Lbs (kg) ①	Weathershield	Catalog Number
15	②	②	DS-3	150	816	261A	247 (112)	**WS11**	**NT20P11S15EE**
25	②	②	DS-3	150	818	261A	370 (168)	**WS11**	**NT20P11S25EE**
37.5	②	②	DS-3	150	819	261A	580 (263)	**WS16**	**NT20P11S37EE**
50	②	②	DS-3	150	820	261A	700 (318)	**WS16**	**NT20P11S50EE**
75	②	②	DS-3	150	821	261A	924 (419)	**WS13**	**NT20P11S75EE**
15	②	②	DS-3	115	816	261A	260 (118)	**WS11**	**NT20P11F15EE**
25	②	②	DS-3	115	818	261A	380 (172)	**WS11**	**NT20P11F25EE**
37.5	②	②	DS-3	115	819	261A	590 (268)	**WS16**	**NT20P11F37EE**
50	②	②	DS-3	115	820	261A	700 (318)	**WS16**	**NT20P11F50EE**
75	②	②	DS-3	115	821	261A	970 (440)	**WS13**	**NT20P11F75EE**
15	②	②	DS-3	80	816	261A	—	**WS11**	**NT20P11B15EE**
25	②	②	DS-3	80	818	261A	—	**WS11**	**NT20P11B25EE**
37.5	②	②	DS-3	80	819	261A	—	**WS16**	**NT20P11B37EE**
50	②	②	DS-3	80	820	261A	—	**WS16**	**NT20P11B50EE**
75	②	②	DS-3	80	821	261A	—	**WS13**	**NT20P11B75EE**

Notes

① Weights subject to change.

② 1 at +5%, 2 at –5% at 240 volts primary; 2 at +2.5%, 4 at –2.5% at 480 volts primary.

For other ratings or catalog numbers not shown, or for special enclosure types (including stainless steel), refer to Eaton. Frame drawings/dimensions information begins on **Page V2-T2-216**.

Three-Phase—K-Factor Rated 60 Hz NEMA TP-1 Energy-Efficient—Aluminum Windings

K-4 480 Delta Volts to 208Y/120 Volts

kVA	Full Capacity Taps FCAN	FCBN	Type	°C Temp. Rise	Frame	Wiring Diagram Number	Weight Lbs (kg) ①	Weathershield	Catalog Number
15	2 at +2.5%	4 at –2.5%	DT-3	150	912D	283B	206 (94)	**WS38**	**H48M28T15EE**
30	2 at +2.5%	4 at –2.5%	DT-3	150	912D	283B	311 (141)	**WS38**	**H48M28T30EE**
45	2 at +2.5%	4 at –2.5%	DT-3	150	912D	283B	400 (182)	**WS38**	**H48M28T45EE**
75	2 at +2.5%	4 at –2.5%	DT-3	150	914F	283B	547 (248)	**WS39**	**H48M28T75EE**
112.5	2 at +2.5%	4 at –2.5%	DT-3	150	916A	283B	800 (363)	**WS19**	**H48M28T12EE**
150	2 at +2.5%	4 at –2.5%	DT-3	150	916A	283B	1010 (459)	**WS19**	**H48M28T49EE**
225	2 at +2.5%	4 at –2.5%	DT-3	150	918A	283B	1680 (763)	**WS34**	**H48M28T22EE**
300	2 at +2.5%	4 at –2.5%	DT-3	150	919E	292A	2122 (963)	**WS35**	**H48M28T33EE**
500	2 at +2.5%	4 at –2.5%	DT-3	150	920E	292A	3201 (1453)	**WS35**	**H48M28T55EE**
15	2 at +2.5%	4 at –2.5%	DT-3	115	912D	283B	307 (139)	**WS38**	**H48M28F15EE**
30	2 at +2.5%	4 at –2.5%	DT-3	115	912D	283B	313 (142)	**WS38**	**H48M28F30EE**
45	2 at +2.5%	4 at –2.5%	DT-3	115	912D	283B	400 (182)	**WS38**	**H48M28F45EE**
75	2 at +2.5%	4 at –2.5%	DT-3	115	914F	283B	587 (266)	**WS39**	**H48M28F75EE**
112.5	2 at +2.5%	4 at –2.5%	DT-3	115	916A	283B	947 (430)	**WS19**	**H48M28F12EE**
150	2 at +2.5%	4 at –2.5%	DT-3	115	917	283B	1243 (564)	**WS34**	**H48M28F49EE**
225	2 at +2.5%	4 at –2.5%	DT-3	115	918A	283B	1680 (763)	**WS34**	**H48M28F22EE**
300	2 at +2.5%	4 at –2.5%	DT-3	115	919E	292A	2480 (1126)	**WS35**	**H48M28F33EE**
500	2 at +2.5%	4 at –2.5%	DT-3	115	920E	292A	3280 (1489)	**WS35**	**H48M28F55EE**
15	2 at +2.5%	4 at –2.5%	DT-3	80	912D	283B	378 (172)	**WS38**	**H48M28B15EE**
30	2 at +2.5%	4 at –2.5%	DT-3	80	912D	283B	365 (166)	**WS38**	**H48M28B30EE**
45	2 at +2.5%	4 at –2.5%	DT-3	80	914F	283B	550 (250)	**WS39**	**H48M28B45EE**
75	2 at +2.5%	4 at –2.5%	DT-3	80	916A	283B	774 (351)	**WS19**	**H48M28B75EE**
112.5	2 at +2.5%	4 at –2.5%	DT-3	80	917	283B	1380 (627)	**WS34**	**H48M28B12EE**
150	2 at +2.5%	4 at –2.5%	DT-3	80	918A	283B	1604 (728)	**WS34**	**H48M28B49EE**
225	2 at +2.5%	4 at –2.5%	DT-3	80	919E	292A	2336 (1061)	**WS35**	**H48M28B22EE**
300	2 at +2.5%	4 at –2.5%	DT-3	80	919E	292A	2689 (1221)	**WS35**	**H48M28B33EE**

Notes

① Weights subject to change.

For other ratings or catalog numbers not shown, or for special enclosure types (including stainless steel), refer to Eaton. Frame drawings/dimensions information begins on **Page V2-T2-216**.

Three-Phase—K-Factor Rated 60 Hz NEMA TP-1 Energy-Efficient—Aluminum Windings

K-13 480 Delta Volts to 208Y/120 Volts

kVA	Full Capacity Taps FCAN	FCBN	Type	°C Temp. Rise	Frame	Wiring Diagram Number	Weight Lbs (kg) ①	Weathershield	Catalog Number
15	2 at +2.5%	4 at –2.5%	DT-3	150	912D	283B	271 (123)	**WS38**	**N48M28T15EE**
30	2 at +2.5%	4 at –2.5%	DT-3	150	912D	283B	365 (166)	**WS38**	**N48M28T30EE**
45	2 at +2.5%	4 at –2.5%	DT-3	150	914F	283B	545 (247)	**WS39**	**N48M28T45EE**
75	2 at +2.5%	4 at –2.5%	DT-3	150	916A	283B	812 (369)	**WS19**	**N48M28T75EE**
112.5	2 at +2.5%	4 at –2.5%	DT-3	150	916A	283B	920 (418)	**WS19**	**N48M28T12EE**
150	2 at +2.5%	4 at –2.5%	DT-3	150	917	283B	1221 (554)	**WS34**	**N48M28T49EE**
225	2 at +2.5%	4 at –2.5%	DT-3	150	923	283B	1960 (890)	**WS37**	**N48M28T22EE**
300	2 at +2.5%	4 at –2.5%	DT-3	150	919E	292A	2358 (1071)	**WS35**	**N48M28T33EE**
500	2 at +2.5%	4 at –2.5%	DT-3	150	922	292A	4799 (2179)	**WS36**	**N48M28T55EE**
15	2 at +2.5%	4 at –2.5%	DT-3	115	912D	283B	332 (151)	**WS38**	**N48M28F15EE**
30	2 at +2.5%	4 at –2.5%	DT-3	115	912D	283B	390 (177)	**WS38**	**N48M28F30EE**
45	2 at +2.5%	4 at –2.5%	DT-3	115	914F	283B	548 (249)	**WS39**	**N48M28F45EE**
75	2 at +2.5%	4 at –2.5%	DT-3	115	916A	283B	808 (367)	**WS19**	**N48M28F75EE**
112.5	2 at +2.5%	4 at –2.5%	DT-3	115	916A	283B	990 (449)	**WS19**	**N48M28F12EE**
150	2 at +2.5%	4 at –2.5%	DT-3	115	918A	292A	1769 (803)	**WS34**	**N48M28F49EE**
225	2 at +2.5%	4 at –2.5%	DT-3	115	919E	292A	2306 (1047)	**WS35**	**N48M28F22EE**
300	2 at +2.5%	4 at –2.5%	DT-3	115	919E	292A	3291 (1494)	**WS35**	**N48M28F33EE**
15	2 at +2.5%	4 at –2.5%	DT-3	80	912D	283B	315 (143)	**WS38**	**N48M28B15EE**
30	2 at +2.5%	4 at –2.5%	DT-3	80	912D	283B	408 (185)	**WS38**	**N48M28B30EE**
45	2 at +2.5%	4 at –2.5%	DT-3	80	914F	283B	555 (252)	**WS39**	**N48M28B45EE**
75	2 at +2.5%	4 at –2.5%	DT-3	80	916A	283B	838 (380)	**WS19**	**N48M28B75EE**
112.5	2 at +2.5%	4 at –2.5%	DT-3	80	917	283B	1367 (621)	**WS34**	**N48M28B12EE**
150	2 at +2.5%	4 at –2.5%	DT-3	80	918A	292A	1607 (730)	**WS34**	**N48M28B49EE**
225	2 at +2.5%	4 at –2.5%	DT-3	80	919E	292A	2582 (1172)	**WS35**	**N48M28B22EE**
300	2 at +2.5%	4 at –2.5%	DT-3	80	920E	292A	3228 (1466)	**WS35**	**N48M28B33EE**

Notes

① Weights subject to change.

For other ratings or catalog numbers not shown, or for special enclosure types (including stainless steel), refer to Eaton. Frame drawings/dimensions information begins on **Page V2-T2-216**.

Three-Phase—K-Factor Rated 60 Hz NEMA TP-1 Energy-Efficient—Aluminum Windings

K-20 480 Delta Volts to 208Y/120 Volts

kVA	Full Capacity Taps FCAN	FCBN	Type	°C Temp. Rise	Frame	Wiring Diagram Number	Weight Lbs (kg) ①	Weathershield	Catalog Number
15	2 at +2.5%	4 at –2.5%	DT-3	150	912D	283B	295 (134)	**WS38**	**G48M28T15EE**
30	2 at +2.5%	4 at –2.5%	DT-3	150	912D	283B	367 (167)	**WS38**	**G48M28T30EE**
45	2 at +2.5%	4 at –2.5%	DT-3	150	914F	283B	563 (256)	**WS39**	**G48M28T45EE**
75	2 at +2.5%	4 at –2.5%	DT-3	150	916A	283B	808 (367)	**WS19**	**G48M28T75EE**
112.5	2 at +2.5%	4 at –2.5%	DT-3	150	917	283B	1379 (626)	**WS34**	**G48M28T12EE**
150	2 at +2.5%	4 at –2.5%	DT-3	150	918A	292A	1559 (708)	**WS34**	**G48M28T49EE**
225	2 at +2.5%	4 at –2.5%	DT-3	150	919E	292A	2600 (1180)	**WS35**	**G48M28T22EE**
300	2 at +2.5%	4 at –2.5%	DT-3	150	919E	292A	2968 (1347)	**WS35**	**G48M28T33EE**
15	2 at +2.5%	4 at –2.5%	DT-3	115	912D	283B	300 (136)	**WS38**	**G48M28F15EE**
30	2 at +2.5%	4 at –2.5%	DT-3	115	912D	283B	403 (183)	**WS38**	**G48M28F30EE**
45	2 at +2.5%	4 at –2.5%	DT-3	115	914F	283B	574 (261)	**WS39**	**G48M28F45EE**
75	2 at +2.5%	4 at –2.5%	DT-3	115	916A	283B	911 (414)	**WS19**	**G48M28F75EE**
112.5	2 at +2.5%	4 at –2.5%	DT-3	115	917	283B	1379 (626)	**WS34**	**G48M28F12EE**
150	2 at +2.5%	4 at –2.5%	DT-3	115	918A	292A	—	**WS34**	**G48M28F49EE**
225	2 at +2.5%	4 at –2.5%	DT-3	115	919E	292A	—	**WS35**	**G48M28F22EE**
300	2 at +2.5%	4 at –2.5%	DT-3	115	919E	292A	—	**WS35**	**G48M28F33EE**
15	2 at +2.5%	4 at –2.5%	DT-3	80	912D	283B	340 (154)	**WS38**	**G48M28B15EE**
30	2 at +2.5%	4 at –2.5%	DT-3	80	912D	283B	405 (184)	**WS38**	**G48M28B30EE**
45	2 at +2.5%	4 at –2.5%	DT-3	80	914F	283B	580 (263)	**WS39**	**G48M28B45EE**
75	2 at +2.5%	4 at –2.5%	DT-3	80	916A	283B	930 (422)	**WS19**	**G48M28B75EE**
112.5	2 at +2.5%	4 at –2.5%	DT-3	80	917	283B	1400 (636)	**WS34**	**G48M28B12EE**
150	2 at +2.5%	4 at –2.5%	DT-3	80	918A	292A	—	**WS34**	**G48M28B49EE**
225	2 at +2.5%	4 at –2.5%	DT-3	80	919E	292A	—	**WS35**	**G48M28B22EE**
300	2 at +2.5%	4 at –2.5%	DT-3	80	919E	292A	—	**WS35**	**G48M28B33EE**

Notes

① Weights subject to change.

For other ratings or catalog numbers not shown, or for special enclosure types (including stainless steel), refer to Eaton. Frame drawings/dimensions information begins on **Page V2-T2-216**.

Single-Phase—K-Factor Rated 60 Hz NEMA TP-1 Energy-Efficient—Copper Windings

K-4 240 x 480 Volts to 120/240 Volts

kVA	Full Capacity Taps FCAN	FCBN	Type	°C Temp. Rise	Frame	Wiring Diagram Number	Weight Lbs (kg) ①	Weathershield	Catalog Number
15	②	②	DS-3	150	816	261A	280 (127)	**WS11**	**HT20P11S15CUEE**
25	②	②	DS-3	150	818	261A	431 (195)	**WS11**	**HT20P11S25CUEE**
37.5	②	②	DS-3	150	818	261A	437 (198)	**WS11**	**HT20P11S37CUEE**
50	②	②	DS-3	150	819	261A	686 (311)	**WS16**	**HT20P11S50CUEE**
75	②	②	DS-3	150	820	261A	—	**WS16**	**HT20P11S75CUEE**
15	②	②	DS-3	115	816	261A	276 (125)	**WS11**	**HT20P11F15CUEE**
25	②	②	DS-3	115	818	261A	435 (197)	**WS11**	**HT20P11F25CUEE**
37.5	②	②	DS-3	115	818	261A	440 (200)	**WS11**	**HT20P11F37CUEE**
50	②	②	DS-3	115	820	261A	700 (318)	**WS16**	**HT20P11F50CUEE**
75	②	②	DS-3	115	821	261A	—	**WS13**	**HT20P11F75CUEE**
15	②	②	DS-3	80	816	261A	—	**WS11**	**HT20P11B15CUEE**
25	②	②	DS-3	80	818	261A	—	**WS11**	**HT20P11B25CUEE**
37.5	②	②	DS-3	80	819	261A	—	**WS16**	**HT20P11B37CUEE**
50	②	②	DS-3	80	820	261A	—	**WS16**	**HT20P11B50CUEE**
75	②	②	DS-3	80	821	261A	—	**WS13**	**HT20P11B75CUEE**

K-13 240 x 480 Volts to 120/240 Volts

kVA	Full Capacity Taps FCAN	FCBN	Type	°C Temp. Rise	Frame	Wiring Diagram Number	Weight Lbs (kg) ①	Weathershield	Catalog Number
15	②	②	DS-3	150	816	261A	283 (128)	**WS11**	**NT20P11S15CUEE**
25	②	②	DS-3	150	818	261A	420 (191)	**WS11**	**NT20P11S25CUEE**
37.5	②	②	DS-3	150	818	261A	425 (193)	**WS11**	**NT20P11S37CUEE**
50	②	②	DS-3	150	820	261A	690 (313)	**WS16**	**NT20P11S50CUEE**
75	②	②	DS-3	150	821	261A	1056 (479)	**WS13**	**NT20P11S75CUEE**
15	②	②	DS-3	115	818	261A	411 (186)	**WS11**	**NT20P11F15CUEE**
25	②	②	DS-3	115	818	261A	427 (194)	**WS11**	**NT20P11F25CUEE**
37.5	②	②	DS-3	115	819	261A	435 (197)	**WS16**	**NT20P11F37CUEE**
50	②	②	DS-3	115	820	261A	710 (322)	**WS16**	**NT20P11F50CUEE**
75	②	②	DS-3	115	821	261A	1100 (499)	**WS13**	**NT20P11F75CUEE**
15	②	②	DS-3	80	818	261A	—	**WS11**	**NT20P11B15CUEE**
25	②	②	DS-3	80	818	261A	—	**WS11**	**NT20P11B25CUEE**
37.5	②	②	DS-3	80	819	261A	—	**WS16**	**NT20P11B37CUEE**
50	②	②	DS-3	80	820	261A	—	**WS16**	**NT20P11B50CUEE**
75	②	②	DS-3	80	821	261A	—	**WS13**	**NT20P11B75CUEE**

Notes

① Weights subject to change.

② 1 at +5%, 2 at –5% at 240 volts primary; 2 at +2.5%, 4 at –2.5% at 480 volts primary.

For other ratings or catalog numbers not shown, or for special enclosure types (including stainless steel), refer to Eaton. Frame drawings/dimensions information begins on **Page V2-T2-216**.

Three-Phase—K-Factor Rated 60 Hz NEMA TP-1 Energy-Efficient—Copper Windings

K-4 480 Delta Volts to 208Y/120 Volts

kVA	Full Capacity Taps FCAN	FCBN	Type	°C Temp. Rise	Frame	Wiring Diagram Number	Weight Lbs (kg) ①	Weathershield	Catalog Number
15	2 at +2.5%	4 at –2.5%	DT-3	150	912D	283B	251 (114)	**WS38**	**H48M28T15CUEE**
30	2 at +2.5%	4 at –2.5%	DT-3	150	912D	283B	326 (148)	**WS38**	**H48M28T30CUEE**
45	2 at +2.5%	4 at –2.5%	DT-3	150	912D	283B	479 (217)	**WS38**	**H48M28T45CUEE**
75	2 at +2.5%	4 at –2.5%	DT-3	150	914F	283B	463 (210)	**WS39**	**H48M28T75CUEE**
112.5	2 at +2.5%	4 at –2.5%	DT-3	150	916A	283B	977 (444)	**WS19**	**H48M28T12CUEE**
150	2 at +2.5%	4 at –2.5%	DT-3	150	916A	283B	1212 (550)	**WS19**	**H48M28T49CUEE**
225	2 at +2.5%	4 at –2.5%	DT-3	150	917	292A	1815 (824)	**WS34**	**H48M28T22CUEE**
300	2 at +2.5%	4 at –2.5%	DT-3	150	923	283B	2400 (1090)	**WS37**	**H48M28T33CUEE**
15	2 at +2.5%	4 at –2.5%	DT-3	115	912D	283B	256 (116)	**WS38**	**H48M28F15CUEE**
30	2 at +2.5%	4 at –2.5%	DT-3	115	912D	283B	341 (155)	**WS38**	**H48M28F30CUEE**
45	2 at +2.5%	4 at –2.5%	DT-3	115	912D	283B	526 (239)	**WS38**	**H48M28F45CUEE**
75	2 at +2.5%	4 at –2.5%	DT-3	115	914F	283B	759 (345)	**WS39**	**H48M28F75CUEE**
112.5	2 at +2.5%	4 at –2.5%	DT-3	115	916A	283B	1030 (468)	**WS19**	**H48M28F12CUEE**
150	2 at +2.5%	4 at –2.5%	DT-3	115	917	283B	1631 (740)	**WS34**	**H48M28F49CUEE**
225	2 at +2.5%	4 at –2.5%	DT-3	115	918A	292A	1965 (892)	**WS34**	**H48M28F22CUEE**
300	2 at +2.5%	4 at –2.5%	DT-3	115	923	283B	2337 (1061)	**WS37**	**H48M28F33CUEE**
15	2 at +2.5%	4 at –2.5%	DT-3	80	912D	283B	365 (166)	**WS38**	**H48M28B15CUEE**
30	2 at +2.5%	4 at –2.5%	DT-3	80	912D	283B	424 (192)	**WS38**	**H48M28B30CUEE**
45	2 at +2.5%	4 at –2.5%	DT-3	80	914F	283B	653 (296)	**WS39**	**H48M28B45CUEE**
75	2 at +2.5%	4 at –2.5%	DT-3	80	916A	283B	640 (291)	**WS19**	**H48M28B75CUEE**
112.5	2 at +2.5%	4 at –2.5%	DT-3	80	916A	283B	1264 (574)	**WS19**	**H48M28B12CUEE**
150	2 at +2.5%	4 at –2.5%	DT-3	80	917	292A	1685 (765)	**WS34**	**H48M28B49CUEE**
225	2 at +2.5%	4 at –2.5%	DT-3	80	923	292A	2096 (952)	**WS37**	**H48M28B22CUEE**
300	2 at +2.5%	4 at –2.5%	DT-3	80	919E	292A	4600 (2087)	**WS35**	**H48M28B33CUEE**

Notes

① Weights subject to change.

For other ratings or catalog numbers not shown, or for special enclosure types (including stainless steel), refer to Eaton. Frame drawings/dimensions information begins on **Page V2-T2-216**.

Three-Phase—K-Factor Rated 60 Hz NEMA TP-1 Energy-Efficient—Copper Windings

K-13 480 Delta Volts to 208Y/120 Volts

kVA	Full Capacity Taps FCAN	FCBN	Type	°C Temp. Rise	Frame	Wiring Diagram Number	Weight Lbs (kg) ①	Weathershield	Catalog Number
15	2 at +2.5%	4 at –2.5%	DT-3	150	912D	283B	346 (157)	**WS38**	**N48M28T15CUEE**
30	2 at +2.5%	4 at –2.5%	DT-3	150	912D	283B	390 (177)	**WS38**	**N48M28T30CUEE**
45	2 at +2.5%	4 at –2.5%	DT-3	150	914F	283B	623 (283)	**WS39**	**N48M28T45CUEE**
75	2 at +2.5%	4 at –2.5%	DT-3	150	916A	283B	848 (385)	**WS19**	**N48M28T75CUEE**
112.5	2 at +2.5%	4 at –2.5%	DT-3	150	916A	283B	1080 (490)	**WS19**	**N48M28T12CUEE**
150	2 at +2.5%	4 at –2.5%	DT-3	150	917	292A	1431 (650)	**WS34**	**N48M28T49CUEE**
225	2 at +2.5%	4 at –2.5%	DT-3	150	923	292A	2129 (967)	**WS37**	**N48M28T22CUEE**
15	2 at +2.5%	4 at –2.5%	DT-3	115	912D	283B	341 (155)	**WS38**	**N48M28F15CUEE**
30	2 at +2.5%	4 at –2.5%	DT-3	115	912D	283B	444 (202)	**WS38**	**N48M28F30CUEE**
45	2 at +2.5%	4 at –2.5%	DT-3	115	914F	283B	598 (271)	**WS39**	**N48M28F45CUEE**
75	2 at +2.5%	4 at –2.5%	DT-3	115	916A	283B	894 (406)	**WS19**	**N48M28F75CUEE**
112.5	2 at +2.5%	4 at –2.5%	DT-3	115	916A	283B	1054 (479)	**WS19**	**N48M28F12CUEE**
150	2 at +2.5%	4 at –2.5%	DT-3	115	917	292A	1399 (635)	**WS34**	**N48M28F49CUEE**
225	2 at +2.5%	4 at –2.5%	DT-3	115	923	292A	2088 (948)	**WS37**	**N48M28F22CUEE**
15	2 at +2.5%	4 at –2.5%	DT-3	80	912D	283B	370 (168)	**WS38**	**N48M28B15CUEE**
30	2 at +2.5%	4 at –2.5%	DT-3	80	912D	283B	490 (222)	**WS38**	**N48M28B30CUEE**
45	2 at +2.5%	4 at –2.5%	DT-3	80	914F	283B	635 (288)	**WS39**	**N48M28B45CUEE**
75	2 at +2.5%	4 at –2.5%	DT-3	80	916A	283B	987 (448)	**WS19**	**N48M28B75CUEE**
112.5	2 at +2.5%	4 at –2.5%	DT-3	80	916A	283B	854 (388)	**WS19**	**N48M28B12CUEE**
150	2 at +2.5%	4 at –2.5%	DT-3	80	918A	283B	1134 (515)	**WS34**	**N48M28B49CUEE**
225	2 at +2.5%	4 at –2.5%	DT-3	80	919	292A	4091 (1857)	**WS35**	**N48M28B22CUEE**

Notes

① Weights subject to change.

For other ratings or catalog numbers not shown, or for special enclosure types (including stainless steel), refer to Eaton. Frame drawings/dimensions information begins on **Page V2-T2-216**.

Three-Phase—K-Factor Rated 60 Hz NEMA TP-1 Energy-Efficient—Copper Windings

K-20 480 Delta Volts to 208Y/120 Volts

kVA	Full Capacity Taps FCAN	FCBN	Type	°C Temp. Rise	Frame	Wiring Diagram Number	Weight Lbs (kg) ①	Weathershield	Catalog Number
15	2 at +2.5%	4 at –2.5%	DT-3	150	912D	283B	390 (177)	**WS38**	**G48M28T15CUEE**
30	2 at +2.5%	4 at –2.5%	DT-3	150	912D	283B	431 (196)	**WS38**	**G48M28T30CUEE**
45	2 at +2.5%	4 at –2.5%	DT-3	150	914F	283B	639 (290)	**WS39**	**G48M28T45CUEE**
75	2 at +2.5%	4 at –2.5%	DT-3	150	916A	283B	905 (411)	**WS19**	**G48M28T75CUEE**
112.5	2 at +2.5%	4 at –2.5%	DT-3	150	916A	283B	1060 (481)	**WS19**	**G48M28T12CUEE**
150	2 at +2.5%	4 at –2.5%	DT-3	150	917	283B	1808 (821)	**WS34**	**G48M28T49CUEE**
225	2 at +2.5%	4 at –2.5%	DT-3	150	923	283B	2386 (1083)	**WS37**	**G48M28T22CUEE**
15	2 at +2.5%	4 at –2.5%	DT-3	115	912D	283B	400 (182)	**WS38**	**G48M28F15CUEE**
30	2 at +2.5%	4 at –2.5%	DT-3	115	912D	283B	450 (204)	**WS38**	**G48M28F30CUEE**
45	2 at +2.5%	4 at –2.5%	DT-3	115	914F	283B	690 (313)	**WS39**	**G48M28F45CUEE**
75	2 at +2.5%	4 at –2.5%	DT-3	115	916A	283B	1148 (521)	**WS19**	**G48M28F75CUEE**
112.5	2 at +2.5%	4 at –2.5%	DT-3	115	917	283B	—	**WS34**	**G48M28F12CUEE**
150	2 at +2.5%	4 at –2.5%	DT-3	115	923	283B	—	**WS37**	**G48M28F49CUEE**
225	2 at +2.5%	4 at –2.5%	DT-3	115	919E	292A	—	**WS35**	**G48M28F22CUEE**
15	2 at +2.5%	4 at –2.5%	DT-3	80	912D	283B	400 (182)	**WS38**	**G48M28B15CUEE**
30	2 at +2.5%	4 at –2.5%	DT-3	80	912D	283B	441 (200)	**WS38**	**G48M28B30CUEE**
45	2 at +2.5%	4 at –2.5%	DT-3	80	914F	283B	676 (307)	**WS39**	**G48M28B45CUEE**
75	2 at +2.5%	4 at –2.5%	DT-3	80	916A	283B	1140 (518)	**WS19**	**G48M28B75CUEE**
112.5	2 at +2.5%	4 at –2.5%	DT-3	80	917	292A	—	**WS34**	**G48M28B12CUEE**
150	2 at +2.5%	4 at –2.5%	DT-3	80	923	292A	2417 (1097)	**WS37**	**G48M28B49CUEE**

Notes

① Weights subject to change.

For other ratings or catalog numbers not shown, or for special enclosure types (including stainless steel), refer to Eaton. Frame drawings/dimensions information begins on **Page V2-T2-216**.

Accessories

Please refer to Section 2.7 **Page V2-T2-191**.

Technical Data and Specifications

Frequency

Eaton standard dry-type distribution transformers are designed for 60 Hz operation. Transformers required for other frequencies are available and must be specifically designed.

Overload Capability

Short-term overload is designed into transformers as required by ANSI. Dry-type distribution transformers will deliver 200% nameplate load for one-half hour, 150% load for one hour, and 125% load for four hours without being damaged, provided that a constant 50% load precedes and follows the overload. See ANSI C57.96-01.250 for additional limitations.

Continuous overload capacity is not deliberately designed into a transformer because the design objective is to be within the allowed winding temperature rise with nameplate loading.

Insulation System and Temperature Rise

Industry standards classify insulation systems and rise as shown below:

Insulation System Classification

Ambient	+ Winding Rise	+ Hot Spot	= Temp. Class
40°C	55°C	10°C	105°C
40°C	80°C	30°C	150°C
25°C	135°C	20°C	180°C
40°C	115°C	30°C	185°C
40°C	150°C	30°C	220°C

The design life of transformers having different insulation systems is the same—the lower-temperature systems are designed for the same life as the higher-temperature systems.

Enclosures

Eaton ventilated transformers, Type KT, use a NEMA 2 rated (drip-proof) enclosure as standard, and are rated NEMA 3R with the addition of weathershields.

Winding Terminations

Primary and secondary windings are terminated in the wiring compartment. Ventilated transformers have leads brought out to aluminum pads that are pre-drilled to accept Cu/Al lugs. **Lugs are not supplied with these transformers.** Eaton recommends that external cables be rated 75°C for ventilated designs.

Sound Levels

All Eaton 600 volt class general-purpose dry-type distribution transformers are designed to meet NEMA ST-20 sound levels listed here. These are the sound levels measured in a soundproof environment. Actual sound levels measured at an installation will likely be higher due to electrical connections and environmental conditions. Lower sound levels are available and should be specified when the transformer is going to be installed in an area where sound may be a concern.

For additional information, please refer to Section 2.7 **Page V2-T2-195**.

Average Sound Levels

NEMA ST-20 Average Sound Level, dB

Equivalent Winding kVA Range	Self-Cooled Ventilated (up to 1.2 kV) K-Factor 1, 4, 9	Self-Cooled Ventilated (up to 1.2 kV) K-Factor 13, 20	Encapsulated (up to 1.2 kV)
3.00 and below	40	40	45
3.01 to 9.00	40	40	45
9.01 to 15.00	45	45	50
15.01 to 30.00	45	45	50
30.01 to 50.00	45	48	50
50.01 to 75.00	50	53	55
75.01 to 112.50	50	53	55
112.51 to 150.00	50	53	55
150.01 to 225.00	55	58	57
225.01 to 300.00	55	58	57
300.01 to 500.00	60	63	59
500.01 to 700.00	62	65	61
700.01 to 1000.00	64	67	63
Greater than 1000	Consult factory	Consult factory	Consult factory

Note

For other ratings or catalog numbers not shown, or for special enclosure types (including stainless steel), refer to Eaton.

Contents

Description	*Page*
NEMA Premium Efficient Transformers	
Features, Benefits and Functions	**V2-T2-62**
Standards and Certifications	**V2-T2-62**
Catalog Number Selection	**V2-T2-63**
Product Selection	**V2-T2-63**
E3 Super Efficient Transformers	**V2-T2-66**

NEMA Premium® Efficient Transformers

Product Description

Note: The following pages provide listings for most standard transformer ratings and catalog numbers. For other ratings or catalog numbers not shown, or for special enclosure types (including stainless steel), refer to Eaton.

Types DS-3, DT-3

- Ventilated, NEMA 2 enclosure standard
- Suitable for indoor applications, outdoors when weathershields are also installed
- Upright mounting only
- 220°C insulation system
- 150°C rise standard; 115°C or 80°C rise optional
- Available in single-phase ratings 15–167 kVA, 600 volts primary (DS-3)
- Available in three-phase ratings 15–1000 kVA and up to 600 volts primary (DT-3)

Application Description

NEMA Premium Efficient compliant energy-efficient transformers are specifically designed to meet the energy efficiency standards set forth in NEMA publication "NEMA Premium Efficiency Transformer Program Guidelines." Surveys have shown that the average loading of low voltage dry-type distribution transformers, over a 24-hour period, is approximately 35%. NEMA Premium compliant transformers are optimized to offer maximum efficiency at 35% of nameplate rating.

The range of products covered by NEMA Premium Efficient are:

NEMA Premium Efficient Product Range

Rating	Voltage Class	Voltage
Dry-Type Rating	Single-phase	15–333 kVA
	Three-phase	15–1000 kVA

Transformers that are currently specifically excluded from the scope of NEMA Premium Program include:

- Liquid-filled transformers below 10 kVA
- Dry-type transformers below 15 kVA
- AC and DC drives transformers
- Rectifier transformers designed for high harmonics
- Autotransformers
- Non-distribution transformers, such as UPS transformers
- Special impedance or regulation transformers
- Regulating transformers
- Sealed and non-ventilated transformers
- Machine tool transformers
- Welding transformers
- Transformers with tap ranges greater than 15%
- Transformers with a frequency other than 60 Hz
- Grounding transformers
- Testing transformers

NEMA Premium Efficient Efficiency Levels

Tables of Energy Efficiency NEMA Premium Efficiency Levels Dry-Type Distribution Transformers—Low Voltage (600V and below)

Single-Phase		Three-Phase	
kVA	Efficiency	kVA	Efficiency
15	98.39	15	97.90
25	98.60	30	98.25
37.5	98.74	45	98.39
50	98.81	75	98.60
75	98.95	112.5	98.74
100	99.02	150	98.81
167	99.09	225	98.95
250	99.16	300	99.02
333	99.23	500	99.09
—	—	750	99.16
—	—	1000	99.23

Features, Benefits and Functions

- 60 Hz operation (except as noted)
- Short-term overload capability as required by ANSI
- Meet NEMA ST-20 sound levels
- Exceed federal energy efficiency requirements for low voltage dry-type distribution transformers effective as of January 1, 2007

Standards and Certifications

- UL listed

Listed

Industry Standards

All Eaton dry-type distribution and control transformers are built and tested in accordance with applicable NEMA, ANSI and IEEE Standards. All 600 volt class transformers are UL listed unless otherwise noted.

Seismically Qualified

Eaton manufactured dry-type distribution transformers are seismically qualified and exceed requirements of the Uniform Building Code (UBC), International Building Code (IBC) and California Code Title 24.

Catalog Number Selection

Please refer to Section 2.7 **Page V2-T2-187**.

Product Selection

Additional Product Selection information begins on **Page V2-T2-189**.

Three-Phase—Type DT-3 60 Hz NEMA Premium Efficient—Copper Windings

K-1 480 Volts to 208Y/120 Volts

kVA	Full Capacity Taps FCAN	FCBN	Type	°C Temp. Rise	Frame	Wiring Diagram Number	Weight Lbs (kg)	Weathershield	Catalog Number
15	2 at +2.5%	4 at –2.5%	DT-3	150	—	283B	—	—	**V48M28T15CUN3**
30	2 at +2.5%	4 at –2.5%	DT-3	150	—	283B	—	—	**V48M28T30CUN3**
45	2 at +2.5%	4 at –2.5%	DT-3	150	—	283B	—	—	**V48M28T45CUN3**
75	2 at +2.5%	4 at –2.5%	DT-3	150	—	283B	—	—	**V48M28T75CUN3**
112.5	2 at +2.5%	4 at –2.5%	DT-3	150	—	283B	—	—	**V48M28T12CUN3**
150	2 at +2.5%	4 at –2.5%	DT-3	150	—	283B	—	—	**V48M28T49CUN3**
225	2 at +2.5%	4 at –2.5%	DT-3	150	—	283B	—	—	**V48M28T22CUN3**
300	2 at +2.5%	4 at –2.5%	DT-3	150	—	283B	—	—	**V48M28T33CUN3**
15	2 at +2.5%	4 at –2.5%	DT-3	115	—	283B	—	—	**V48M28F15CUN3**
30	2 at +2.5%	4 at –2.5%	DT-3	115	—	283B	—	—	**V48M28F30CUN3**
45	2 at +2.5%	4 at –2.5%	DT-3	115	—	283B	—	—	**V48M28F45CUN3**
75	2 at +2.5%	4 at –2.5%	DT-3	115	—	283B	—	—	**V48M28F75CUN3**
112.5	2 at +2.5%	4 at –2.5%	DT-3	115	—	283B	—	—	**V48M28F12CUN3**
150	2 at +2.5%	4 at –2.5%	DT-3	115	—	283B	—	—	**V48M28F49CUN3**
225	2 at +2.5%	4 at –2.5%	DT-3	115	—	283B	—	—	**V48M28F22CUN3**
300	2 at +2.5%	4 at –2.5%	DT-3	115	—	283B	—	—	**V48M28F33CUN3**
15	2 at +2.5%	4 at –2.5%	DT-3	80	—	283B	—	—	**V48M28B15CUN3**
30	2 at +2.5%	4 at –2.5%	DT-3	80	—	283B	—	—	**V48M28B30CUN3**
45	2 at +2.5%	4 at –2.5%	DT-3	80	—	283B	—	—	**V48M28B45CUN3**
75	2 at +2.5%	4 at –2.5%	DT-3	80	—	283B	—	—	**V48M28B75CUN3**
112.5	2 at +2.5%	4 at –2.5%	DT-3	80	—	283B	—	—	**V48M28B12CUN3**
150	2 at +2.5%	4 at –2.5%	DT-3	80	—	283B	—	—	**V48M28B49CUN3**
225	2 at +2.5%	4 at –2.5%	DT-3	80	—	283B	—	—	**V48M28B22CUN3**

Note

For other ratings or catalog numbers not shown, or for special enclosure types (including stainless steel), refer to Eaton. Frame drawings/dimensions information begins on **Page V2-T2-216**.

Three-Phase—Type DT-3 60 Hz NEMA Premium Efficient—Copper Windings

K-9 480 Volts to 208Y/120 Volts

kVA	Full Capacity Taps FCAN	FCBN	Type	°C Temp. Rise	Frame	Wiring Diagram Number	Weight Lbs (kg)	Weathershield	Catalog Number
15	2 at +2.5%	4 at –2.5%	DT-3	150	—	283B	—	—	**B48M28T15CUN3**
30	2 at +2.5%	4 at –2.5%	DT-3	150	—	283B	—	—	**B48M28T30CUN3**
45	2 at +2.5%	4 at –2.5%	DT-3	150	—	283B	—	—	**B48M28T45CUN3**
75	2 at +2.5%	4 at –2.5%	DT-3	150	—	283B	—	—	**B48M28T75CUN3**
112.5	2 at +2.5%	4 at –2.5%	DT-3	150	—	283B	—	—	**B48M28T12CUN3**
150	2 at +2.5%	4 at –2.5%	DT-3	150	—	283B	—	—	**B48M28T49CUN3**
225	2 at +2.5%	4 at –2.5%	DT-3	150	—	283B	—	—	**B48M28T22CUN3**
300	2 at +2.5%	4 at –2.5%	DT-3	150	—	283B	—	—	**B48M28T33CUN3**
15	2 at +2.5%	4 at –2.5%	DT-3	115	—	283B	—	—	**B48M28F15CUN3**
30	2 at +2.5%	4 at –2.5%	DT-3	115	—	283B	—	—	**B48M28F30CUN3**
45	2 at +2.5%	4 at –2.5%	DT-3	115	—	283B	—	—	**B48M28F45CUN3**
75	2 at +2.5%	4 at –2.5%	DT-3	115	—	283B	—	—	**B48M28F75CUN3**
112.5	2 at +2.5%	4 at –2.5%	DT-3	115	—	283B	—	—	**B48M28F12CUN3**
150	2 at +2.5%	4 at –2.5%	DT-3	115	—	283B	—	—	**B48M28F49CUN3**
225	2 at +2.5%	4 at –2.5%	DT-3	115	—	283B	—	—	**B48M28F22CUN3**
300	2 at +2.5%	4 at –2.5%	DT-3	115	—	283B	—	—	**B48M28F33CUN3**
15	2 at +2.5%	4 at –2.5%	DT-3	80	—	283B	—	—	**B48M28B15CUN3**
30	2 at +2.5%	4 at –2.5%	DT-3	80	—	283B	—	—	**B48M28B30CUN3**
45	2 at +2.5%	4 at –2.5%	DT-3	80	—	283B	—	—	**B48M28B45CUN3**
75	2 at +2.5%	4 at –2.5%	DT-3	80	—	283B	—	—	**B48M28B75CUN3**
112.5	2 at +2.5%	4 at –2.5%	DT-3	80	—	283B	—	—	**B48M28B12CUN3**
150	2 at +2.5%	4 at –2.5%	DT-3	80	—	283B	—	—	**B48M28B49CUN3**
225	2 at +2.5%	4 at –2.5%	DT-3	80	—	283B	—	—	**B48M28B22CUN3**

Note

For other ratings or catalog numbers not shown, or for special enclosure types (including stainless steel), refer to Eaton. Frame drawings/dimensions information begins on **Page V2-T2-216**.

Three-Phase—Type DT-3 60 Hz NEMA Premium Efficient—Copper Windings

K-13 480 Delta Volts to 208Y/120 Volts

kVA	Full Capacity Taps FCAN	FCBN	Type	°C Temp. Rise	Frame	Wiring Diagram Number	Weight Lbs (kg)	Weathershield	Catalog Number
15	2 at +2.5%	4 at -2.5%	DT-3	150	—	283C	—	—	**N48M28T15CUN3**
30	2 at +2.5%	4 at –2.5%	DT-3	150	—	283B	—	—	**N48M28T30CUN3**
45	2 at +2.5%	4 at –2.5%	DT-3	150	—	283B	—	—	**N48M28T45CUN3**
75	2 at +2.5%	4 at –2.5%	DT-3	150	—	283B	—	—	**N48M28T75CUN3**
112.5	2 at +2.5%	4 at –2.5%	DT-3	150	—	283B	—	—	**N48M28T12CUN3**
150	2 at +2.5%	4 at –2.5%	DT-3	150	—	283B	—	—	**N48M28T49CUN3**
225	2 at +2.5%	4 at –2.5%	DT-3	150	—	283B	—	—	**N48M28T22CUN3**
300	2 at +2.5%	4 at –2.5%	DT-3	150	—	292A	—	—	**N48M28T33CUN3**
15	2 at +2.5%	4 at –2.5%	DT-3	115	—	283C	—	—	**N48M28F15CUN3**
30	2 at +2.5%	4 at –2.5%	DT-3	115	—	283B	—	—	**N48M28F30CUN3**
45	2 at +2.5%	4 at –2.5%	DT-3	115	—	283B	—	—	**N48M28F45CUN3**
75	2 at +2.5%	4 at –2.5%	DT-3	115	—	283B	—	—	**N48M28F75CUN3**
112.5	2 at +2.5%	4 at –2.5%	DT-3	115	—	283B	—	—	**N48M28F12CUN3**
150	2 at +2.5%	4 at –2.5%	DT-3	115	—	283B	—	—	**N48M28F49CUN3**
225	2 at +2.5%	4 at –2.5%	DT-3	115	—	283B	—	—	**N48M28F22CUN3**
300	2 at +2.5%	4 at –2.5%	DT-3	115	—	292A	—	—	**N48M28F33CUN3**
15	2 at +2.5%	4 at –2.5%	DT-3	80	—	283B	—	—	**N48M28B15CUN3**
30	2 at +2.5%	4 at –2.5%	DT-3	80	—	283B	—	—	**N48M28B30CUN3**
45	2 at +2.5%	4 at –2.5%	DT-3	80	—	283B	—	—	**N48M28B45CUN3**
75	2 at +2.5%	4 at –2.5%	DT-3	80	—	283B	—	—	**N48M28B75CUN3**
112.5	2 at +2.5%	4 at –2.5%	DT-3	80	—	283B	—	—	**N48M28B12CUN3**
150	2 at +2.5%	4 at –2.5%	DT-3	80	—	283B	—	—	**N48M28B49CUN3**
225	2 at +2.5%	4 at –2.5%	DT-3	80	—	292A	—	—	**N48M28B22CUN3**

Note

For other ratings or catalog numbers not shown, or for special enclosure types (including stainless steel), refer to Eaton. Frame drawings/dimensions information begins on **Page V2-T2-216**.

Contents

Description	*Page*
NEMA Premium Efficient Transformers	**V2-T2-61**
E3 Super Efficient Transformers	
Features, Benefits and Functions	**V2-T2-67**
Standards and Certifications	**V2-T2-67**
Catalog Number Selection	**V2-T2-68**
Product Selection	**V2-T2-68**

E3 Super Efficient Transformers

Product Description

Note: The following pages provide listings for most standard transformer ratings and catalog numbers. For other ratings or catalog numbers not shown, or for special enclosure types (including stainless steel), refer to Eaton.

Types DS-3, DT-3

- Ventilated, NEMA 2 enclosure standard
- Suitable for indoor applications, outdoors when weathershields are also installed
- Upright mounting only
- 220°C insulation system
- 150°C rise standard; 115°C or 80°C rise optional
- Available in single-phase ratings 15–167 kVA, 600 volts primary (DS-3)
- Available in three-phase ratings 15–1000 kVA and up to 600 volts primary (DT-3)

Application Description

E3 CSL3-2007energy-efficient transformers are specifically designed to meet the energy efficiency guidelines as intended in the U.S. Department of Energy 10 CFR Parts 430 and 431, dated October 12, 2007. Surveys have shown that the average loading of low voltage dry-type distribution transformers, over a 24-hour period, is approximately 35%. E3 Efficient transformers are optimized to offer maximum efficiency at 35% of nameplate rating.

Additional clarifications regarding CSL3-2007 can be found in NEMA's whitepaper *"Clarifications on the Use of Department of Energy Design—Line 6, 7 and 8 transformers contained within 10 CFR 430 and 431."*

The range of products covered by E3 Efficient are:

E3 Efficient Product Range

Rating	Voltage Class	Voltage
Dry-Type Rating	Single-phase	15–333 kVA
	Three-phase	15–1000 kVA

Transformers that are excluded from the scope of E3 Efficient transformers include:

- Liquid-filled transformers below 10 kVA
- Dry-type transformers below 15 kVA
- AC and DC drives transformers
- Rectifier transformers designed for high harmonics
- Autotransformers
- Non-distribution transformers, such as UPS transformers
- Special impedance or regulation transformers
- Regulating transformers
- Sealed and non-ventilated transformers
- Machine tool transformers
- Welding transformers
- Transformers with tap ranges greater than 15%
- Transformers with a frequency other than 60 Hz
- Grounding transformers
- Testing transformers

E3 Efficient Efficiency Levels

Tables of Energy Efficiency E3 Efficiency Levels Dry-Type Distribution Transformers— Low Voltage (600V and below)

Single-Phase		Three-Phase	
kVA	**Efficiency**	**kVA**	**Efficiency**
15	98.23	15	97.97
25	98.44	30	98.29
37.5	98.59	45	98.45
50	98.69	75	98.64
75	98.64	112.5	98.77
100	98.90	150	98.86
167	99.03	225	98.97
250	99.12	300	99.04
333	99.18	500	99.16
—	—	750	99.24
—	—	1000	99.29

Features, Benefits and Functions

- 60 Hz operation (except as noted)
- Short-term overload capability as required by ANSI
- Meet NEMA ST-20 sound levels
- Meet or exceed federal energy efficiency requirements for low voltage dry-type distribution transformers as intended in U.S. DOE Document 10 CFR Parts 430 and 431, dated October 12, 2007.

Standards and Certifications

- UL listed

Listed

Industry Standards

All Eaton dry-type distribution and control transformers are built and tested in accordance with applicable NEMA, ANSI and IEEE Standards. All 600 volt class transformers are UL listed unless otherwise noted.

Seismically Qualified

Eaton manufactured dry-type distribution transformers are seismically qualified and exceed requirements of the Uniform Building Code (UBC), International Building Code (IBC) and California Code Title 24.

Catalog Number Selection

Please refer to Section 2.7 **Page V2-T2-187**.

Product Selection

Additional Product Selection information begins on **Page V2-T2-189**.

Three-Phase—Type DT-3 60 Hz E3 Super Energy-Efficient—Copper Windings

K-1 480 Volts to 208Y/120 Volts

kVA	Full Capacity Taps FCAN	FCBN	Type	°C Temp. Rise	Frame	Wiring Diagram Number	Weight Lbs (kg)	Weathershield	Catalog Number
15	2 at +2.5%	4 at –2.5%	DT-3	150	—	283B	—	—	**V48M28T15CUE3**
30	2 at +2.5%	4 at –2.5%	DT-3	150	—	283B	—	—	**V48M28T30CUE3**
45	2 at +2.5%	4 at –2.5%	DT-3	150	—	283B	—	—	**V48M28T45CUE3**
75	2 at +2.5%	4 at –2.5%	DT-3	150	—	283B	—	—	**V48M28T75CUE3**
112.5	2 at +2.5%	4 at –2.5%	DT-3	150	—	283B	—	—	**V48M28T12CUE3**
150	2 at +2.5%	4 at –2.5%	DT-3	150	—	283B	—	—	**V48M28T49CUE3**
225	2 at +2.5%	4 at –2.5%	DT-3	150	—	283B	—	—	**V48M28T22CUE3**
300	2 at +2.5%	4 at –2.5%	DT-3	150	—	283B	—	—	**V48M28T33CUE3**
15	2 at +2.5%	4 at –2.5%	DT-3	115	—	283B	—	—	**V48M28F15CUE3**
30	2 at +2.5%	4 at –2.5%	DT-3	115	—	283B	—	—	**V48M28F30CUE3**
45	2 at +2.5%	4 at –2.5%	DT-3	115	—	283B	—	—	**V48M28F45CUE3**
75	2 at +2.5%	4 at –2.5%	DT-3	115	—	283B	—	—	**V48M28F75CUE3**
112.5	2 at +2.5%	4 at –2.5%	DT-3	115	—	283B	—	—	**V48M28F12CUE3**
150	2 at +2.5%	4 at –2.5%	DT-3	115	—	283B	—	—	**V48M28F49CUE3**
225	2 at +2.5%	4 at –2.5%	DT-3	115	—	283B	—	—	**V48M28F22CUE3**
300	2 at +2.5%	4 at –2.5%	DT-3	115	—	283B	—	—	**V48M28F33CUE3**
15	2 at +2.5%	4 at –2.5%	DT-3	80	—	283B	—	—	**V48M28B15CUE3**
30	2 at +2.5%	4 at –2.5%	DT-3	80	—	283B	—	—	**V48M28B30CUE3**
45	2 at +2.5%	4 at –2.5%	DT-3	80	—	283B	—	—	**V48M28B45CUE3**
75	2 at +2.5%	4 at –2.5%	DT-3	80	—	283B	—	—	**V48M28B75CUE3**
112.5	2 at +2.5%	4 at –2.5%	DT-3	80	—	283B	—	—	**V48M28B12CUE3**
150	2 at +2.5%	4 at –2.5%	DT-3	80	—	283B	—	—	**V48M28B49CUE3**
225	2 at +2.5%	4 at –2.5%	DT-3	80	—	283B	—	—	**V48M28B22CUE3**

Note

For other ratings or catalog numbers not shown, or for special enclosure types (including stainless steel), refer to Eaton. Frame drawings/dimensions information begins on **Page V2-T2-216**.

Three-Phase—Type DT-3 60 Hz E3 Super Energy-Efficient—Copper Windings

K-9 480 Volts to 208Y/120 Volts

kVA	Full Capacity Taps FCAN	FCBN	Type	°C Temp. Rise	Frame	Wiring Diagram Number	Weight Lbs (kg) ①	Weathershield	Catalog Number
15	2 at +2.5%	4 at –2.5%	DT-3	150	912D	283B	330 (150)	**WS38**	**B48M28T15CUE3**
30	2 at +2.5%	4 at –2.5%	DT-3	150	912D	283B	400 (182)	**WS38**	**B48M28T30CUE3**
45	2 at +2.5%	4 at –2.5%	DT-3	150	915F	283B	630 (286)	**WS39**	**B48M28T45CUE3**
75	2 at +2.5%	4 at –2.5%	DT-3	150	915F	283B	865 (393)	**WS39**	**B48M28T75CUE3**
112.5	2 at +2.5%	4 at –2.5%	DT-3	150	917	283B	1520 (690)	**WS34**	**B48M28T12CUE3**
150	2 at +2.5%	4 at –2.5%	DT-3	150	917	283B	1650 (749)	**WS34**	**B48M28T49CUE3**
225	2 at +2.5%	4 at –2.5%	DT-3	150	918A	283B	2090 (949)	**WS34**	**B48M28T22CUE3**
300	2 at +2.5%	4 at –2.5%	DT-3	150	919E	283B	3900 (1771)	**WS35**	**B48M28T33CUE3**
15	2 at +2.5%	4 at –2.5%	DT-3	115	912D	283B	335 (152)	**WS38**	**B48M28F15CUE3**
30	2 at +2.5%	4 at –2.5%	DT-3	115	912D	283B	406 (184)	**WS38**	**B48M28F30CUE3**
45	2 at +2.5%	4 at –2.5%	DT-3	115	915F	283B	635 (288)	**WS39**	**B48M28F45CUE3**
75	2 at +2.5%	4 at –2.5%	DT-3	115	915F	283B	870 (395)	**WS39**	**B48M28F75CUE3**
112.5	2 at +2.5%	4 at –2.5%	DT-3	115	917	283B	1526 (693)	**WS34**	**B48M28F12CUE3**
150	2 at +2.5%	4 at –2.5%	DT-3	115	917	283B	1665 (756)	**WS34**	**B48M28F49CUE3**
225	2 at +2.5%	4 at –2.5%	DT-3	115	918A	283B	2094 (951)	**WS34**	**B48M28F22CUE3**
300	2 at +2.5%	4 at –2.5%	DT-3	115	919E	283B	3900 (1771)	**WS35**	**B48M28F33CUE3**
15	2 at +2.5%	4 at –2.5%	DT-3	80	912D	283B	406 (184)	**WS38**	**B48M28B15CUE3**
30	2 at +2.5%	4 at –2.5%	DT-3	80	915F	283B	635 (288)	**WS39**	**B48M28B30CUE3**
45	2 at +2.5%	4 at –2.5%	DT-3	80	915F	283B	870 (395)	**WS39**	**B48M28B45CUE3**
75	2 at +2.5%	4 at –2.5%	DT-3	80	917	283B	1526 (693)	**WS34**	**B48M28B75CUE3**
112.5	2 at +2.5%	4 at –2.5%	DT-3	80	917	283B	1665 (756)	**WS34**	**B48M28B12CUE3**
150	2 at +2.5%	4 at –2.5%	DT-3	80	918A	283B	2094 (951)	**WS34**	**B48M28B49CUE3**
225	2 at +2.5%	4 at –2.5%	DT-3	80	919E	283B	3900 (1771)	**WS35**	**B48M28B22CUE3**

Notes

① Weights subject to change.

For other ratings or catalog numbers not shown, or for special enclosure types (including stainless steel), refer to Eaton. Frame drawings/dimensions information begins on **Page V2-T2-216**.

Three-Phase—Type DT-3 60 Hz E3 Super Energy-Efficient—Copper Windings

K-13 480 Delta Volts to 208Y/120 Volts

kVA	Full Capacity Taps FCAN	FCBN	Type	°C Temp. Rise	Frame	Wiring Diagram Number	Weight Lbs (kg) ①	Weathershield	Catalog Number
15	2 at +2.5%	4 at -2.5%	DT-3	150	912D	283C	325 (148)	**WS38**	**N48M28T15CUE3**
30	2 at +2.5%	4 at –2.5%	DT-3	150	912D	283B	370 (168)	**WS38**	**N48M28T30CUE3**
45	2 at +2.5%	4 at –2.5%	DT-3	150	915F	283B	635 (288)	**WS39**	**N48M28T45CUE3**
75	2 at +2.5%	4 at –2.5%	DT-3	150	915F	283B	870 (395)	**WS39**	**N48M28T75CUE3**
112.5	2 at +2.5%	4 at –2.5%	DT-3	150	917	283B	1526 (693)	**WS34**	**N48M28T12CUE3**
150	2 at +2.5%	4 at –2.5%	DT-3	150	917	283B	1665 (756)	**WS34**	**N48M28T49CUE3**
225	2 at +2.5%	4 at –2.5%	DT-3	150	918A	283B	2094 (951)	**WS34**	**N48M28T22CUE3**
300	2 at +2.5%	4 at –2.5%	DT-3	150	919E	292A	3900 (1771)	**WS35**	**N48M28T33CUE3**
15	2 at +2.5%	4 at –2.5%	DT-3	115	912D	283C	325 (148)	**WS38**	**N48M28F15CUE3**
30	2 at +2.5%	4 at –2.5%	DT-3	115	912D	283B	370 (168)	**WS38**	**N48M28F30CUE3**
45	2 at +2.5%	4 at –2.5%	DT-3	115	915F	283B	635 (288)	**WS39**	**N48M28F45CUE3**
75	2 at +2.5%	4 at –2.5%	DT-3	115	915F	283B	870 (395)	**WS39**	**N48M28F75CUE3**
112.5	2 at +2.5%	4 at –2.5%	DT-3	115	917	283B	1526 (693)	**WS34**	**N48M28F12CUE3**
150	2 at +2.5%	4 at –2.5%	DT-3	115	917	283B	1665 (756)	**WS34**	**N48M28F49CUE3**
225	2 at +2.5%	4 at –2.5%	DT-3	115	918A	283B	2094 (951)	**WS34**	**N48M28F22CUE3**
300	2 at +2.5%	4 at –2.5%	DT-3	115	919E	292A	3900 (1771)	**WS35**	**N48M28F33CUE3**
15	2 at +2.5%	4 at –2.5%	DT-3	80	912D	283B	370 (168)	**WS38**	**N48M28B15CUE3**
30	2 at +2.5%	4 at –2.5%	DT-3	80	915F	283B	635 (288)	**WS39**	**N48M28B30CUE3**
45	2 at +2.5%	4 at –2.5%	DT-3	80	915F	283B	870 (395)	**WS39**	**N48M28B45CUE3**
75	2 at +2.5%	4 at –2.5%	DT-3	80	917	283B	1526 (693)	**WS34**	**N48M28B75CUE3**
112.5	2 at +2.5%	4 at –2.5%	DT-3	80	917	283B	1665 (756)	**WS34**	**N48M28B12CUE3**
150	2 at +2.5%	4 at –2.5%	DT-3	80	918A	283B	2094 (951)	**WS34**	**N48M28B49CUE3**
225	2 at +2.5%	4 at –2.5%	DT-3	80	919E	292A	3900 (1771)	**WS35**	**N48M28B22CUE3**

Notes

① Weights subject to change.

For other ratings or catalog numbers not shown, or for special enclosure types (including stainless steel), refer to Eaton. Frame drawings/dimensions information begins on **Page V2-T2-216**.

Harmonic Mitigating Transformer

Contents

Description	*Page*
Energy-Efficient Harmonic Mitigating Transformers	
Standards and Certifications	**V2-T2-72**
Catalog Number Selection	**V2-T2-72**
Product Selection	**V2-T2-73**
NEMA TP-1 Efficient	**V2-T2-73**
E3 Super Efficient	**V2-T2-81**
Accessories	**V2-T2-89**
Technical Data and Specifications	**V2-T2-89**

Product Description

Note: The following pages provide listings for most standard transformer ratings and catalog numbers. For other ratings or catalog numbers not shown, or for special enclosure types (including stainless steel), refer to Eaton.

The electrical transformer has been a staple of electrical power systems for the past 100+ years. While the types of electrical loads that are being added to our systems today have radically changed, the transformer has stayed relatively the same in design during this time frame. Eaton's harmonic mitigating transformer (HMT) represents the evolution of the transformer into something that will best provide clean, energy-efficient electricity to power the loads of today and tomorrow. The recent shift of our electrical loads from predominately AC consumers (resistive heating elements, incandescent lighting, three-phase motor load) to DC consumers (such as computers, fax machines, printers, down to the "wall-wart" that recharges the cell phone) requires that our electrical infrastructure changes as well. These new loads now introduce other currents and frequencies into our electrical power systems—commonly known as "harmonics." Harmonic currents can cause additional heating, which may cause transformers, generators and conductors to become overloaded. Excessive heat is one of the major reasons that standard transformers and conductors fail prematurely. These harmonic currents have various other effects (such as "loss of ride-through capability," reduced lifespan and mysterious misoperation of equipment) on the components and loads of an electrical distribution system. Eaton's HMTs, when used properly within an electrical system, will help keep the loads operating the way the manufacturer designed them and keep the facility's electrical system free from voltage distortion.

Three-Phase, Type DT-3 HMT, 60 Hz

- Harmonic mitigating (cancellation) transformers are a cost-effective means of treating harmful harmonics in an electrical distribution system
- Reducing harmonic content in electrical systems can result in a more reliable electrical system, lower maintenance costs, less downtime, fewer equipment malfunctions, and lower cooling system capacity
- Available in a variety of phase-shift configurations that allow flexibility to target specific families of harmonics
- Harmonic treatment via electromagnetic flux cancellation
- May be installed as a stand-alone transformer, or included in IFS™
- Available in three-phase ratings, 15–500 kVA, up to 600 volts primary

Features and Benefits

- 480 volt to 208/120 volt standard. Additional voltage combinations available
- 150°C, 115°C or 80°C temperature rise available
- Copper windings and terminals standard; aluminum available
- Meet or exceed NEMA TP-1 energy-efficiency level
- 200% rated neutral
- Single electrostatic shield for attenuation of common mode and transverse mode noise
- Approximately 98% efficient when operated in systems with 100% nonlinear load profiles
- 220°C insulation system
- Third-party tested for harmonic performance and energy efficiency
- Meet NEMA ST-20 sound standards
- Eliminate circulating harmonic currents in primary windings of transformers
- Enclosures are NEMA 2 drip-proof. The addition of optional weather-shields makes the enclosure NEMA 3R rainproof
- Harmonic cancellation via electromagnetic flux cancellation. Filters, capacitors or other such devices are not used
- Help meet IEEE 519 harmonic limits

Standards and Certifications

- UL listed

Listed

Industry Standards

All Eaton dry-type transformers are built and tested in accordance with applicable NEMA, ANSI and IEEE standards. Harmonic mitigating transformers are UL listed.

IEEE 519-1992

Proper use of Eaton's harmonic mitigating transformers within your electrical system will help you to meet the harmonic distortion limits as proposed by IEEE 519-1992, "IEEE Recommended Practices and Requirements for Harmonic Control in Electrical Power Systems."

Seismic Qualified

Eaton dry-type distribution transformers are seismically qualified and exceed the requirements of the Uniform Building Code (UBC), International Building Code (IBC) and California Code Title 24.

Catalog Number Selection

Energy-Efficient Harmonic Mitigating Transformers

X 48 M 28 F 30 TCUEE NEG

Primary Voltage ①
- **48** = 480 three-phase, three-wire
- **60** = 600 three-phase, three-wire

Tap Arrangement
- **M** = 2 at +2.5%, 4 at –2.5%
- **D** = 2 at +2.5%, 2 at –2.5%

Secondary Voltage ①
- **28** = 208/120 three-phase, four-wire
- **47** = 480/277 three-phase, four-wire

Temperature Rise
- **F** = 115°C (standard)
- **T** = 150°C
- **B** = 80°C

kVA Rating

15 = 15	**49** = 150
30 = 30	**22** = 225
45 = 45	**33** = 300
75 = 75	**55** = 500
12 = 112.5	

Modifications ①
- **T** = Single thermal sensor (190°C)
- **TT** = Two thermal sensors (190°C and 175°C)
- **X** = 50/60 Hz
- **CU** = Copper windings (std.)
- **EE** = ENERGY STAR label (std.)
- **SS** = Grade 304 stainless steel enclosure
- **E3** = Super efficient

Phase Shift
- **NON** = 0°
- **THR** = –30°
- **POS** = +15°
- **NEG** = –15°

NEMA TP-1-2002 Efficiency Levels

Tables of Energy Efficiency NEMA Class 1 Efficiency Levels Dry-Type Distribution Transformers—Low Voltage (600V and below)

Three-Phase

kVA	Efficiency
15	97.0
30	97.5
45	97.7
75	98.0
112.5	98.2
150	98.3
225	98.5
300	98.6
500	98.7
750	98.8
1000	98.9

E3 Efficient Efficiency Levels

Tables of Energy Efficiency E3 Efficiency Levels Dry-Type Distribution Transformers—Low Voltage (600V and below)

Three-Phase

kVA	Efficiency
15	97.97
30	98.29
45	98.45
75	98.64
112.5	98.77
150	98.86
225	98.97
300	99.04
500	99.16
750	99.24
1000	99.29

Note

① The most common ratings are shown. Contact Eaton for availability of additional ratings.

Product Selection

Three-Phase—Type DT-3 60 Hz NEMA TP-1 Energy-Efficient Harmonic Mitigating

480 Volts to 208Y/120 Volts—Aluminum Windings—Type NON 0-Degree Phase Shift

kVA	Full Capacity Taps FCAN	FCBN	Type	°C Temp. Rise	Frame	Wiring Diagram Number	Weight Lbs (kg)	Weathershield	Catalog Number
15	2 at +2.5%	4 at –2.5%	DT-3	150	912D	200X	290 (132)	**WS38**	**X48M28T15EENON**
30	2 at +2.5%	4 at –2.5%	DT-3	150	912D	200X	365 (166)	**WS38**	**X48M28T30EENON**
45	2 at +2.5%	4 at –2.5%	DT-3	150	915F	200X	560 (254)	**WS39**	**X48M28T45EENON**
75	2 at +2.5%	4 at –2.5%	DT-3	150	916A	200X	800 (363)	**WS19**	**X48M28T75EENON**
112.5	2 at +2.5%	4 at –2.5%	DT-3	150	917	200X	1380 (627)	**WS34**	**X48M28T12EENON**
150	2 at +2.5%	4 at –2.5%	DT-3	150	918A	200X	1560 (708)	**WS34**	**X48M28T49EENON**
225	2 at +2.5%	4 at –2.5%	DT-3	150	919EX	201X	2400 (1090)	**WS35**	**X48M28T22EENON**
300	2 at +2.5%	4 at –2.5%	DT-3	150	919EX	201X	2970 (1348)	**WS35**	**X48M28T33EENON**
15	2 at +2.5%	4 at –2.5%	DT-3	115	912D	200X	360 (163)	**WS38**	**X48M28F15EENON**
30	2 at +2.5%	4 at –2.5%	DT-3	115	912D	200X	405 (184)	**WS38**	**X48M28F30EENON**
45	2 at +2.5%	4 at –2.5%	DT-3	115	915F	200X	575 (261)	**WS39**	**X48M28F45EENON**
75	2 at +2.5%	4 at –2.5%	DT-3	115	916A	200X	900 (409)	**WS19**	**X48M28F75EENON**
112.5	2 at +2.5%	4 at –2.5%	DT-3	115	917	200X	1380 (627)	**WS34**	**X48M28F12EENON**
150	2 at +2.5%	4 at –2.5%	DT-3	115	918A	200X	1600 (726)	**WS34**	**X48M28F49EENON**
225	2 at +2.5%	4 at –2.5%	DT-3	115	919EX	201X	2600 (1180)	**WS35**	**X48M28F22EENON**
300	2 at +2.5%	4 at –2.5%	DT-3	115	919EX	201X	3100 (1407)	**WS35**	**X48M28F33EENON**
15	2 at +2.5%	4 at –2.5%	DT-3	80	912D	200X	380 (173)	**WS38**	**X48M28B15EENON**
30	2 at +2.5%	4 at –2.5%	DT-3	80	915F	200X	560 (254)	**WS39**	**X48M28B30EENON**
45	2 at +2.5%	4 at –2.5%	DT-3	80	915F	200X	800 (363)	**WS39**	**X48M28B45EENON**
75	2 at +2.5%	4 at –2.5%	DT-3	80	916A	200X	1380 (627)	**WS19**	**X48M28B75EENON**
112.5	2 at +2.5%	4 at –2.5%	DT-3	80	917	200X	1560 (708)	**WS34**	**X48M28B12EENON**
150	2 at +2.5%	4 at –2.5%	DT-3	80	918A	200X	2400 (1090)	**WS34**	**X48M28B49EENON**
225	2 at +2.5%	4 at –2.5%	DT-3	80	919EX	201X	2970 (1348)	**WS35**	**X48M28B22EENON**
300	2 at +2.5%	4 at –2.5%	DT-3	80	919EX	201X	3400 (1544)	**WS35**	**X48M28B33EENON**

Note

Frame drawings/dimensions information begins on **Page V2-T2-216**.

Three-Phase—Type DT-3 60 Hz NEMA TP-1 Energy-Efficient Harmonic Mitigating

480 Volts to 208Y/120 Volts—Copper Windings—Type NON 0-Degree Phase Shift

kVA	Full Capacity Taps FCAN	FCBN	Type	°C Temp. Rise	Frame	Wiring Diagram Number	Weight Lbs (kg)	Weathershield	Catalog Number
15	2 at +2.5%	4 at –2.5%	DT-3	150	912D	200X	335 (152)	**WS38**	**X48M28T15CUEENON**
30	2 at +2.5%	4 at –2.5%	DT-3	150	912D	200X	430 (195)	**WS38**	**X48M28T30CUEENON**
45	2 at +2.5%	4 at –2.5%	DT-3	150	915F	200X	627 (285)	**WS39**	**X48M28T45CUEENON**
75	2 at +2.5%	4 at –2.5%	DT-3	150	916A	200X	926 (420)	**WS19**	**X48M28T75CUEENON**
112.5	2 at +2.5%	4 at –2.5%	DT-3	150	917	200X	1610 (731)	**WS34**	**X48M28T12CUEENON**
150	2 at +2.5%	4 at –2.5%	DT-3	150	918A	200X	1800 (817)	**WS34**	**X48M28T49CUEENON**
225	2 at +2.5%	4 at –2.5%	DT-3	150	919EX	201X	3580 (1625)	**WS35**	**X48M28T22CUEENON**
300	2 at +2.5%	4 at –2.5%	DT-3	150	919EX	201X	3500 (1589)	**WS35**	**X48M28T33CUEENON**
15	2 at +2.5%	4 at –2.5%	DT-3	115	912D	200X	362 (164)	**WS38**	**X48M28F15CUEENON**
30	2 at +2.5%	4 at –2.5%	DT-3	115	912D	200X	430 (195)	**WS38**	**X48M28F30CUEENON**
45	2 at +2.5%	4 at –2.5%	DT-3	115	915F	200X	627 (285)	**WS39**	**X48M28F45CUEENON**
75	2 at +2.5%	4 at –2.5%	DT-3	115	916A	200X	926 (420)	**WS19**	**X48M28F75CUEENON**
112.5	2 at +2.5%	4 at –2.5%	DT-3	115	917	200X	1628 (739)	**WS34**	**X48M28F12CUEENON**
150	2 at +2.5%	4 at –2.5%	DT-3	115	918A	200X	2001 (908)	**WS34**	**X48M28F49CUEENON**
225	2 at +2.5%	4 at –2.5%	DT-3	115	919EX	201X	3596 (1633)	**WS35**	**X48M28F22CUEENON**
300	2 at +2.5%	4 at –2.5%	DT-3	115	919EX	201X	3891 (1767)	**WS35**	**X48M28F33CUEENON**
15	2 at +2.5%	4 at –2.5%	DT-3	80	912D	200X	358 (163)	**WS38**	**X48M28B15CUEENON**
30	2 at +2.5%	4 at –2.5%	DT-3	80	915F	200X	558 (253)	**WS39**	**X48M28B30CUEENON**
45	2 at +2.5%	4 at –2.5%	DT-3	80	915F	200X	630 (286)	**WS39**	**X48M28B45CUEENON**
75	2 at +2.5%	4 at –2.5%	DT-3	80	916A	200X	940 (427)	**WS19**	**X48M28B75CUEENON**
112.5	2 at +2.5%	4 at –2.5%	DT-3	80	917	200X	1628 (739)	**WS34**	**X48M28B12CUEENON**
150	2 at +2.5%	4 at –2.5%	DT-3	80	918A	200X	1800 (817)	**WS34**	**X48M28B49CUEENON**
225	2 at +2.5%	4 at –2.5%	DT-3	80	919EX	201X	3400 (1544)	**WS35**	**X48M28B22CUEENON**
300	2 at +2.5%	4 at –2.5%	DT-3	80	919EX	201X	4377 (1987)	**WS35**	**X48M28B33CUEENON**

Note

Frame drawings/dimensions information begins on **Page V2-T2-216**.

Three-Phase—Type DT-3 60 Hz NEMA TP-1 Energy-Efficient Harmonic Mitigating

480 Volts to 208Y/120 Volts—Aluminum Windings—Type THR 30-Degree Phase Shift

kVA	Full Capacity Taps FCAN	FCBN	Type	°C Temp. Rise	Frame	Wiring Diagram Number	Weight Lbs (kg)	Weathershield	Catalog Number
15	2 at +2.5%	4 at –2.5%	DT-3	150	912D	200X	290 (132)	**WS38**	**X48M28T15EETHR**
30	2 at +2.5%	4 at –2.5%	DT-3	150	912D	200X	365 (166)	**WS38**	**X48M28T30EETHR**
45	2 at +2.5%	4 at –2.5%	DT-3	150	915F	200X	560 (254)	**WS39**	**X48M28T45EETHR**
75	2 at +2.5%	4 at –2.5%	DT-3	150	916A	200X	800 (363)	**WS19**	**X48M28T75EETHR**
112.5	2 at +2.5%	4 at –2.5%	DT-3	150	917	200X	1380 (627)	**WS34**	**X48M28T12EETHR**
150	2 at +2.5%	4 at –2.5%	DT-3	150	918A	200X	1560 (708)	**WS34**	**X48M28T49EETHR**
225	2 at +2.5%	4 at –2.5%	DT-3	150	919EX	201X	2400 (1090)	**WS35**	**X48M28T22EETHR**
300	2 at +2.5%	4 at –2.5%	DT-3	150	919EX	201X	2970 (1348)	**WS35**	**X48M28T33EETHR**
15	2 at +2.5%	4 at –2.5%	DT-3	115	912D	200X	360 (163)	**WS38**	**X48M28F15EETHR**
30	2 at +2.5%	4 at –2.5%	DT-3	115	912D	200X	405 (184)	**WS38**	**X48M28F30EETHR**
45	2 at +2.5%	4 at –2.5%	DT-3	115	915F	200X	575 (261)	**WS39**	**X48M28F45EETHR**
75	2 at +2.5%	4 at –2.5%	DT-3	115	916A	200X	900 (409)	**WS19**	**X48M28F75EETHR**
112.5	2 at +2.5%	4 at –2.5%	DT-3	115	917	200X	1380 (627)	**WS34**	**X48M28F12EETHR**
150	2 at +2.5%	4 at –2.5%	DT-3	115	918A	200X	1600 (726)	**WS34**	**X48M28F49EETHR**
225	2 at +2.5%	4 at –2.5%	DT-3	115	919EX	201X	2600 (1180)	**WS35**	**X48M28F22EETHR**
300	2 at +2.5%	4 at –2.5%	DT-3	115	919EX	201X	3100 (1407)	**WS35**	**X48M28F33EETHR**
15	2 at +2.5%	4 at –2.5%	DT-3	80	912D	200X	380 (173)	**WS38**	**X48M28B15EETHR**
30	2 at +2.5%	4 at –2.5%	DT-3	80	915F	200X	560 (254)	**WS39**	**X48M28B30EETHR**
45	2 at +2.5%	4 at –2.5%	DT-3	80	915F	200X	800 (363)	**WS39**	**X48M28B45EETHR**
75	2 at +2.5%	4 at –2.5%	DT-3	80	916A	200X	1380 (627)	**WS19**	**X48M28B75EETHR**
112.5	2 at +2.5%	4 at –2.5%	DT-3	80	917	200X	1560 (708)	**WS34**	**X48M28B12EETHR**
150	2 at +2.5%	4 at –2.5%	DT-3	80	918A	200X	2400 (1090)	**WS34**	**X48M28B49EETHR**
225	2 at +2.5%	4 at –2.5%	DT-3	80	919EX	201X	2970 (1348)	**WS35**	**X48M28B22EETHR**
300	2 at +2.5%	4 at –2.5%	DT-3	80	919EX	201X	3400 (1544)	**WS35**	**X48M28B33EETHR**

Note

Frame drawings/dimensions information begins on **Page V2-T2-216**.

Three-Phase—Type DT-3 60 Hz NEMA TP-1 Energy-Efficient Harmonic Mitigating

480 Volts to 208Y/120 Volts—Copper Windings—Type THR 30-Degree Phase Shift

kVA	Full Capacity Taps FCAN	FCBN	Type	°C Temp. Rise	Frame	Wiring Diagram Number	Weight Lbs (kg)	Weathershield	Catalog Number
15	2 at +2.5%	4 at –2.5%	DT-3	150	912D	203X	335 (152)	**WS38**	**X48M28T15CUEETHR**
30	2 at +2.5%	4 at –2.5%	DT-3	150	912D	203X	450 (204)	**WS38**	**X48M28T30CUEETHR**
45	2 at +2.5%	4 at –2.5%	DT-3	150	915F	203X	627 (285)	**WS39**	**X48M28T45CUEETHR**
75	2 at +2.5%	4 at –2.5%	DT-3	150	916A	203X	855 (388)	**WS19**	**X48M28T75CUEETHR**
112.5	2 at +2.5%	4 at –2.5%	DT-3	150	917	203X	1610 (731)	**WS34**	**X48M28T12CUEETHR**
150	2 at +2.5%	4 at –2.5%	DT-3	150	918A	203X	1800 (817)	**WS34**	**X48M28T49CUEETHR**
225	2 at +2.5%	4 at –2.5%	DT-3	150	919EX	203X	3450 (1566)	**WS35**	**X48M28T22CUEETHR**
300	2 at +2.5%	4 at –2.5%	DT-3	150	919EX	203X	3894 (1768)	**WS35**	**X48M28T33CUEETHR**
15	2 at +2.5%	4 at –2.5%	DT-3	115	912D	203X	362 (164)	**WS38**	**X48M28F15CUEETHR**
30	2 at +2.5%	4 at –2.5%	DT-3	115	912D	203X	450 (204)	**WS38**	**X48M28F30CUEETHR**
45	2 at +2.5%	4 at –2.5%	DT-3	115	915F	203X	610 (277)	**WS39**	**X48M28F45CUEETHR**
75	2 at +2.5%	4 at –2.5%	DT-3	115	916A	203X	868 (394)	**WS19**	**X48M28F75CUEETHR**
112.5	2 at +2.5%	4 at –2.5%	DT-3	115	917	203X	1643 (746)	**WS34**	**X48M28F12CUEETHR**
150	2 at +2.5%	4 at –2.5%	DT-3	115	918A	203X	2001 (908)	**WS34**	**X48M28F49CUEETHR**
225	2 at +2.5%	4 at –2.5%	DT-3	115	919EX	203X	3370 (1530)	**WS35**	**X48M28F22CUEETHR**
300	2 at +2.5%	4 at –2.5%	DT-3	115	919EX	203X	3894 (1768)	**WS35**	**X48M28F33CUEETHR**
15	2 at +2.5%	4 at –2.5%	DT-3	80	912D	203X	358 (163)	**WS38**	**X48M28B15CUEETHR**
30	2 at +2.5%	4 at –2.5%	DT-3	80	915F	203X	558 (253)	**WS39**	**X48M28B30CUEETHR**
45	2 at +2.5%	4 at –2.5%	DT-3	80	915F	203X	630 (286)	**WS39**	**X48M28B45CUEETHR**
75	2 at +2.5%	4 at –2.5%	DT-3	80	916A	203X	940 (427)	**WS19**	**X48M28B75CUEETHR**
112.5	2 at +2.5%	4 at –2.5%	DT-3	80	917	203X	1628 (739)	**WS34**	**X48M28B12CUEETHR**
150	2 at +2.5%	4 at –2.5%	DT-3	80	918A	203X	1800 (817)	**WS34**	**X48M28B49CUEETHR**
225	2 at +2.5%	4 at –2.5%	DT-3	80	919EX	203X	3400 (1544)	**WS35**	**X48M28B22CUEETHR**
300	2 at +2.5%	4 at –2.5%	DT-3	80	919EX	203X	4417 (2005)	**WS35**	**X48M28B33CUEETHR**

Note

Frame drawings/dimensions information begins on **Page V2-T2-216**.

Three-Phase—Type DT-3 60 Hz NEMA TP-1 Energy-Efficient Harmonic Mitigating

480 Volts to 208Y/120 Volts—Aluminum Windings—Type NEG –15-Degree Phase Shift

kVA	Full Capacity Taps FCAN	FCBN	Type	°C Temp. Rise	Frame	Wiring Diagram Number	Weight Lbs (kg)	Weathershield	Catalog Number
15	2 at +2.5%	4 at –2.5%	DT-3	150	912D	200X	290 (132)	**WS38**	**X48M28T15EENEG**
30	2 at +2.5%	4 at –2.5%	DT-3	150	912D	200X	365 (166)	**WS38**	**X48M28T30EENEG**
45	2 at +2.5%	4 at –2.5%	DT-3	150	915F	200X	560 (254)	**WS39**	**X48M28T45EENEG**
75	2 at +2.5%	4 at –2.5%	DT-3	150	916A	200X	800 (363)	**WS19**	**X48M28T75EENEG**
112.5	2 at +2.5%	4 at –2.5%	DT-3	150	917	200X	1380 (627)	**WS34**	**X48M28T12EENEG**
150	2 at +2.5%	4 at –2.5%	DT-3	150	918A	200X	1560 (708)	**WS34**	**X48M28T49EENEG**
225	2 at +2.5%	4 at –2.5%	DT-3	150	919EX	201X	2400 (1090)	**WS35**	**X48M28T22EENEG**
300	2 at +2.5%	4 at –2.5%	DT-3	150	919EX	201X	2970 (1348)	**WS35**	**X48M28T33EENEG**
15	2 at +2.5%	4 at –2.5%	DT-3	115	912D	200X	360 (163)	**WS38**	**X48M28F15EENEG**
30	2 at +2.5%	4 at –2.5%	DT-3	115	912D	200X	405 (184)	**WS38**	**X48M28F30EENEG**
45	2 at +2.5%	4 at –2.5%	DT-3	115	915F	200X	575 (261)	**WS39**	**X48M28F45EENEG**
75	2 at +2.5%	4 at –2.5%	DT-3	115	916A	200X	900 (409)	**WS19**	**X48M28F75EENEG**
112.5	2 at +2.5%	4 at –2.5%	DT-3	115	917	200X	1380 (627)	**WS34**	**X48M28F12EENEG**
150	2 at +2.5%	4 at –2.5%	DT-3	115	918A	200X	1600 (726)	**WS34**	**X48M28F49EENEG**
225	2 at +2.5%	4 at –2.5%	DT-3	115	919EX	201X	2600 (1180)	**WS35**	**X48M28F22EENEG**
300	2 at +2.5%	4 at –2.5%	DT-3	115	919EX	201X	3100 (1407)	**WS35**	**X48M28F33EENEG**
15	2 at +2.5%	4 at –2.5%	DT-3	80	912D	200X	380 (173)	**WS38**	**X48M28B15EENEG**
30	2 at +2.5%	4 at –2.5%	DT-3	80	915F	200X	560 (254)	**WS39**	**X48M28B30EENEG**
45	2 at +2.5%	4 at –2.5%	DT-3	80	915F	200X	800 (363)	**WS39**	**X48M28B45EENEG**
75	2 at +2.5%	4 at –2.5%	DT-3	80	916A	200X	1380 (627)	**WS19**	**X48M28B75EENEG**
112.5	2 at +2.5%	4 at –2.5%	DT-3	80	917	200X	1560 (708)	**WS34**	**X48M28B12EENEG**
150	2 at +2.5%	4 at –2.5%	DT-3	80	918A	200X	2400 (1090)	**WS34**	**X48M28B49EENEG**
225	2 at +2.5%	4 at –2.5%	DT-3	80	919EX	201X	2970 (1348)	**WS35**	**X48M28B22EENEG**
300	2 at +2.5%	4 at –2.5%	DT-3	80	919EX	201X	3400 (1544)	**WS35**	**X48M28B33EENEG**

Note

Frame drawings/dimensions information begins on **Page V2-T2-216**.

Three-Phase—Type DT-3 60 Hz NEMA TP-1 Energy-Efficient Harmonic Mitigating

480 Volts to 208Y/120 Volts—Copper Windings—Type NEG –15-Degree Phase Shift

kVA	Full Capacity Taps FCAN	FCBN	Type	°C Temp. Rise	Frame	Wiring Diagram Number	Weight Lbs (kg)	Weathershield	Catalog Number
15	2 at +2.5%	4 at –2.5%	DT-3	150	912D	200X	335 (152)	**WS38**	**X48M28T15CUEENEG**
30	2 at +2.5%	4 at –2.5%	DT-3	150	912D	200X	430 (195)	**WS38**	**X48M28T30CUEENEG**
45	2 at +2.5%	4 at –2.5%	DT-3	150	915F	200X	627 (285)	**WS39**	**X48M28T45CUEENEG**
75	2 at +2.5%	4 at –2.5%	DT-3	150	916A	200X	926 (420)	**WS19**	**X48M28T75CUEENEG**
112.5	2 at +2.5%	4 at –2.5%	DT-3	150	917	200X	1610 (731)	**WS34**	**X48M28T12CUEENEG**
150	2 at +2.5%	4 at –2.5%	DT-3	150	918A	200X	1800 (817)	**WS34**	**X48M28T49CUEENEG**
225	2 at +2.5%	4 at –2.5%	DT-3	150	919EX	200X	3580 (1625)	**WS35**	**X48M28T22CUEENEG**
300	2 at +2.5%	4 at –2.5%	DT-3	150	919EX	200X	3500 (1589)	**WS35**	**X48M28T33CUEENEG**
15	2 at +2.5%	4 at –2.5%	DT-3	115	912D	200X	353 (160)	**WS38**	**X48M28F15CUEENEG**
30	2 at +2.5%	4 at –2.5%	DT-3	115	912D	200X	430 (195)	**WS38**	**X48M28F30CUEENEG**
45	2 at +2.5%	4 at –2.5%	DT-3	115	915F	200X	627 (285)	**WS39**	**X48M28F45CUEENEG**
75	2 at +2.5%	4 at –2.5%	DT-3	115	916A	200X	926 (420)	**WS19**	**X48M28F75CUEENEG**
112.5	2 at +2.5%	4 at –2.5%	DT-3	115	917	200X	1628 (739)	**WS34**	**X48M28F12CUEENEG**
150	2 at +2.5%	4 at –2.5%	DT-3	115	918A	200X	2001 (908)	**WS34**	**X48M28F49CUEENEG**
225	2 at +2.5%	4 at –2.5%	DT-3	115	919EX	200X	3596 (1633)	**WS35**	**X48M28F22CUEENEG**
300	2 at +2.5%	4 at –2.5%	DT-3	115	919EX	200X	3891 (1767)	**WS35**	**X48M28F33CUEENEG**
15	2 at +2.5%	4 at –2.5%	DT-3	80	912D	200X	358 (163)	**WS38**	**X48M28B15CUEENEG**
30	2 at +2.5%	4 at –2.5%	DT-3	80	915F	200X	558 (253)	**WS39**	**X48M28B30CUEENEG**
45	2 at +2.5%	4 at –2.5%	DT-3	80	915F	200X	630 (286)	**WS39**	**X48M28B45CUEENEG**
75	2 at +2.5%	4 at –2.5%	DT-3	80	916A	200X	940 (427)	**WS19**	**X48M28B75CUEENEG**
112.5	2 at +2.5%	4 at –2.5%	DT-3	80	917	200X	1628 (739)	**WS34**	**X48M28B12CUEENEG**
150	2 at +2.5%	4 at –2.5%	DT-3	80	918A	200X	1800 (817)	**WS34**	**X48M28B49CUEENEG**
225	2 at +2.5%	4 at –2.5%	DT-3	80	919EX	200X	3400 (1544)	**WS35**	**X48M28B22CUEENEG**
300	2 at +2.5%	4 at –2.5%	DT-3	80	920EX	200X	4377 (1987)	**WS35**	**X48M28B33CUEENEG**

Note

Frame drawings/dimensions information begins on **Page V2-T2-216**.

Three-Phase—Type DT-3 60 Hz NEMA TP-1 Energy-Efficient Harmonic Mitigating

480 Volts to 208Y/120 Volts—Aluminum Windings—Type POS +15-Degree Phase Shift

kVA	Full Capacity Taps FCAN	FCBN	Type	°C Temp. Rise	Frame	Wiring Diagram Number	Weight Lbs (kg)	Weathershield	Catalog Number
15	2 at +2.5%	4 at –2.5%	DT-3	150	912D	200X	290 (132)	**WS38**	**X48M28T15EEPOS**
30	2 at +2.5%	4 at –2.5%	DT-3	150	912D	200X	365 (166)	**WS38**	**X48M28T30EEPOS**
45	2 at +2.5%	4 at –2.5%	DT-3	150	915F	200X	560 (254)	**WS39**	**X48M28T45EEPOS**
75	2 at +2.5%	4 at –2.5%	DT-3	150	916A	200X	800 (363)	**WS19**	**X48M28T75EEPOS**
112.5	2 at +2.5%	4 at –2.5%	DT-3	150	917	200X	1380 (627)	**WS34**	**X48M28T12EEPOS**
150	2 at +2.5%	4 at –2.5%	DT-3	150	918A	200X	1560 (708)	**WS34**	**X48M28T49EEPOS**
225	2 at +2.5%	4 at –2.5%	DT-3	150	919EX	201X	2400 (1090)	**WS35**	**X48M28T22EEPOS**
300	2 at +2.5%	4 at –2.5%	DT-3	150	919EX	201X	2970 (1348)	**WS35**	**X48M28T33EEPOS**
15	2 at +2.5%	4 at –2.5%	DT-3	115	912D	200X	360 (163)	**WS38**	**X48M28F15EEPOS**
30	2 at +2.5%	4 at –2.5%	DT-3	115	912D	200X	405 (184)	**WS38**	**X48M28F30EEPOS**
45	2 at +2.5%	4 at –2.5%	DT-3	115	915F	200X	575 (261)	**WS39**	**X48M28F45EEPOS**
75	2 at +2.5%	4 at –2.5%	DT-3	115	916A	200X	900 (409)	**WS19**	**X48M28F75EEPOS**
112.5	2 at +2.5%	4 at –2.5%	DT-3	115	917	200X	1380 (627)	**WS34**	**X48M28F12EEPOS**
150	2 at +2.5%	4 at –2.5%	DT-3	115	918A	200X	1600 (726)	**WS34**	**X48M28F49EEPOS**
225	2 at +2.5%	4 at –2.5%	DT-3	115	919EX	201X	2600 (1180)	**WS35**	**X48M28F22EEPOS**
300	2 at +2.5%	4 at –2.5%	DT-3	115	919EX	201X	3100 (1407)	**WS35**	**X48M28F33EEPOS**
15	2 at +2.5%	4 at –2.5%	DT-3	80	912D	200X	380 (173)	**WS38**	**X48M28B15EEPOS**
30	2 at +2.5%	4 at –2.5%	DT-3	80	915F	200X	560 (254)	**WS39**	**X48M28B30EEPOS**
45	2 at +2.5%	4 at –2.5%	DT-3	80	915F	200X	800 (363)	**WS39**	**X48M28B45EEPOS**
75	2 at +2.5%	4 at –2.5%	DT-3	80	916A	200X	1380 (627)	**WS19**	**X48M28B75EEPOS**
112.5	2 at +2.5%	4 at –2.5%	DT-3	80	917	200X	1560 (708)	**WS34**	**X48M28B12EEPOS**
150	2 at +2.5%	4 at –2.5%	DT-3	80	918A	200X	2400 (1090)	**WS34**	**X48M28B49EEPOS**
225	2 at +2.5%	4 at –2.5%	DT-3	80	919EX	201X	2970 (1348)	**WS35**	**X48M28B22EEPOS**
300	2 at +2.5%	4 at –2.5%	DT-3	80	919EX	201X	3400 (1544)	**WS35**	**X48M28B33EEPOS**

Note

Frame drawings/dimensions information begins on **Page V2-T2-216**.

Three-Phase—Type DT-3 60 Hz NEMA TP-1 Energy-Efficient Harmonic Mitigating

480 Volts to 208Y/120 Volts—Copper Windings—Type POS +15-Degree Phase Shift

kVA	Full Capacity Taps FCAN	FCBN	Type	°C Temp. Rise	Frame	Wiring Diagram Number	Weight Lbs (kg)	Weathershield	Catalog Number
15	2 at +2.5%	4 at –2.5%	DT-3	150	912D	200X	335 (152)	**WS38**	**X48M28T15CUEEPOS**
30	2 at +2.5%	4 at –2.5%	DT-3	150	912D	200X	430 (195)	**WS38**	**X48M28T30CUEEPOS**
45	2 at +2.5%	4 at –2.5%	DT-3	150	915F	200X	627 (285)	**WS39**	**X48M28T45CUEEPOS**
75	2 at +2.5%	4 at –2.5%	DT-3	150	916A	200X	926 (420)	**WS19**	**X48M28T75CUEEPOS**
112.5	2 at +2.5%	4 at –2.5%	DT-3	150	917	200X	1610 (731)	**WS34**	**X48M28T12CUEEPOS**
150	2 at +2.5%	4 at –2.5%	DT-3	150	918A	200X	1800 (817)	**WS34**	**X48M28T49CUEEPOS**
225	2 at +2.5%	4 at –2.5%	DT-3	150	919EX	201X	3580 (1625)	**WS35**	**X48M28T22CUEEPOS**
300	2 at +2.5%	4 at –2.5%	DT-3	150	919EX	201X	3500 (1589)	**WS35**	**X48M28T33CUEEPOS**
15	2 at +2.5%	4 at –2.5%	DT-3	115	912D	200X	362 (164)	**WS38**	**X48M28F15CUEEPOS**
30	2 at +2.5%	4 at –2.5%	DT-3	115	912D	200X	430 (195)	**WS38**	**X48M28F30CUEEPOS**
45	2 at +2.5%	4 at –2.5%	DT-3	115	915F	200X	627 (285)	**WS39**	**X48M28F45CUEEPOS**
75	2 at +2.5%	4 at –2.5%	DT-3	115	916A	200X	926 (420)	**WS19**	**X48M28F75CUEEPOS**
112.5	2 at +2.5%	4 at –2.5%	DT-3	115	917	200X	1628 (739)	**WS34**	**X48M28F12CUEEPOS**
150	2 at +2.5%	4 at –2.5%	DT-3	115	918A	200X	2001 (908)	**WS34**	**X48M28F49CUEEPOS**
225	2 at +2.5%	4 at –2.5%	DT-3	115	919EX	201X	3596 (1633)	**WS35**	**X48M28F22CUEEPOS**
300	2 at +2.5%	4 at –2.5%	DT-3	115	919EX	201X	3891 (1767)	**WS35**	**X48M28F33CUEEPOS**
15	2 at +2.5%	4 at –2.5%	DT-3	80	912D	200X	358 (163)	**WS38**	**X48M28B15CUEEPOS**
30	2 at +2.5%	4 at –2.5%	DT-3	80	915F	200X	558 (253)	**WS39**	**X48M28B30CUEEPOS**
45	2 at +2.5%	4 at –2.5%	DT-3	80	915F	200X	630 (286)	**WS39**	**X48M28B45CUEEPOS**
75	2 at +2.5%	4 at –2.5%	DT-3	80	916A	200X	940 (427)	**WS19**	**X48M28B75CUEEPOS**
112.5	2 at +2.5%	4 at –2.5%	DT-3	80	917	200X	1628 (739)	**WS34**	**X48M28B12CUEEPOS**
150	2 at +2.5%	4 at –2.5%	DT-3	80	918A	200X	1800 (817)	**WS34**	**X48M28B49CUEEPOS**
225	2 at +2.5%	4 at –2.5%	DT-3	80	919EX	201X	3400 (1544)	**WS35**	**X48M28B22CUEEPOS**
300	2 at +2.5%	4 at –2.5%	DT-3	80	919EX	201X	4377 (1987)	**WS35**	**X48M28B33CUEEPOS**

Note

Frame drawings/dimensions information begins on **Page V2-T2-216**.

Three-Phase—Type DT-3 60 Hz E3 Super Energy-Efficient Harmonic Mitigating

480 Volts to 208Y/120 Volts—Aluminum Windings—Type NON 0-Degree Phase Shift

kVA	Full Capacity Taps FCAN	FCBN	Type	°C Temp Rise	Frame	Wiring Diagram Number	Weight Lbs (kg)	Weathershield	Catalog Number
15	2 at +2.5%	4 at –2.5%	DT-3	150	—	200X	—	—	**X48M28T15E3NON**
30	2 at +2.5%	4 at –2.5%	DT-3	150	—	200X	—	—	**X48M28T30E3NON**
45	2 at +2.5%	4 at –2.5%	DT-3	150	—	200X	—	—	**X48M28T45E3NON**
75	2 at +2.5%	4 at –2.5%	DT-3	150	—	200X	—	—	**X48M28T75E3NON**
112.5	2 at +2.5%	4 at –2.5%	DT-3	150	—	200X	—	—	**X48M28T12E3NON**
150	2 at +2.5%	4 at –2.5%	DT-3	150	—	200X	—	—	**X48M28T49E3NON**
225	2 at +2.5%	4 at –2.5%	DT-3	150	—	201X	—	—	**X48M28T22E3NON**
300	2 at +2.5%	4 at –2.5%	DT-3	150	—	201X	—	—	**X48M28T33E3NON**
15	2 at +2.5%	4 at –2.5%	DT-3	115	—	200X	—	—	**X48M28F15E3NON**
30	2 at +2.5%	4 at –2.5%	DT-3	115	—	200X	—	—	**X48M28F30E3NON**
45	2 at +2.5%	4 at –2.5%	DT-3	115	—	200X	—	—	**X48M28F45E3NON**
75	2 at +2.5%	4 at –2.5%	DT-3	115	—	200X	—	—	**X48M28F75E3NON**
112.5	2 at +2.5%	4 at –2.5%	DT-3	115	—	200X	—	—	**X48M28F12E3NON**
150	2 at +2.5%	4 at –2.5%	DT-3	115	—	200X	—	—	**X48M28F49E3NON**
225	2 at +2.5%	4 at –2.5%	DT-3	115	—	201X	—	—	**X48M28F22E3NON**
300	2 at +2.5%	4 at –2.5%	DT-3	115	—	201X	—	—	**X48M28F33E3NON**
15	2 at +2.5%	4 at –2.5%	DT-3	80	—	200X	—	—	**X48M28B15E3NON**
30	2 at +2.5%	4 at –2.5%	DT-3	80	—	200X	—	—	**X48M28B30E3NON**
45	2 at +2.5%	4 at –2.5%	DT-3	80	—	200X	—	—	**X48M28B45E3NON**
75	2 at +2.5%	4 at –2.5%	DT-3	80	—	200X	—	—	**X48M28B75E3NON**
112.5	2 at +2.5%	4 at –2.5%	DT-3	80	—	200X	—	—	**X48M28B12E3NON**
150	2 at +2.5%	4 at –2.5%	DT-3	80	—	200X	—	—	**X48M28B49E3NON**
225	2 at +2.5%	4 at –2.5%	DT-3	80	—	201X	—	—	**X48M28B22E3NON**
300	2 at +2.5%	4 at –2.5%	DT-3	80	—	201X	—	—	**X48M28B33E3NON**

Note

Frame drawings/dimensions information begins on **Page V2-T2-216**.

Three-Phase—Type DT-3 60 Hz E3 Super Energy-Efficient Harmonic Mitigating

480 Volts to 208Y/120 Volts—Copper Windings—Type NON 0-Degree Phase Shift

kVA	Full Capacity Taps FCAN	FCBN	Type	°C Temp Rise	Frame	Wiring Diagram Number	Weight Lbs (kg)	Weathershield	Catalog Number
15	2 at +2.5%	4 at –2.5%	DT-3	150	912D	200X	335 (152)	**WS38**	**X48M28T15CUE3NON**
30	2 at +2.5%	4 at –2.5%	DT-3	150	912D	200X	430 (195)	**WS38**	**X48M28T30CUE3NON**
45	2 at +2.5%	4 at –2.5%	DT-3	150	915F	200X	627 (285)	**WS39**	**X48M28T45CUE3NON**
75	2 at +2.5%	4 at –2.5%	DT-3	150	916A	200X	926 (420)	**WS19**	**X48M28T75CUE3NON**
112.5	2 at +2.5%	4 at –2.5%	DT-3	150	917	200X	1610 (731)	**WS34**	**X48M28T12CUE3NON**
150	2 at +2.5%	4 at –2.5%	DT-3	150	918A	200X	1800 (817)	**WS34**	**X48M28T49CUE3NON**
225	2 at +2.5%	4 at –2.5%	DT-3	150	919EX	201X	3580 (1625)	**WS35**	**X48M28T22CUE3NON**
300	2 at +2.5%	4 at –2.5%	DT-3	150	919EX	201X	3500 (1589)	**WS35**	**X48M28T33CUE3NON**
15	2 at +2.5%	4 at –2.5%	DT-3	115	912D	200X	362 (164)	**WS38**	**X48M28F15CUE3NON**
30	2 at +2.5%	4 at –2.5%	DT-3	115	912D	200X	430 (195)	**WS38**	**X48M28F30CUE3NON**
45	2 at +2.5%	4 at –2.5%	DT-3	115	915F	200X	627 (285)	**WS39**	**X48M28F45CUE3NON**
75	2 at +2.5%	4 at –2.5%	DT-3	115	916A	200X	926 (420)	**WS19**	**X48M28F75CUE3NON**
112.5	2 at +2.5%	4 at –2.5%	DT-3	115	917	200X	1628 (739)	**WS34**	**X48M28F12CUE3NON**
150	2 at +2.5%	4 at –2.5%	DT-3	115	918A	200X	2001 (908)	**WS34**	**X48M28F49CUE3NON**
225	2 at +2.5%	4 at –2.5%	DT-3	115	919EX	201X	3596 (1633)	**WS35**	**X48M28F22CUE3NON**
300	2 at +2.5%	4 at –2.5%	DT-3	115	919EX	201X	3891 (1767)	**WS35**	**X48M28F33CUE3NON**
15	2 at +2.5%	4 at –2.5%	DT-3	80	912D	200X	358 (163)	**WS38**	**X48M28B15CUE3NON**
30	2 at +2.5%	4 at –2.5%	DT-3	80	915F	200X	558 (253)	**WS39**	**X48M28B30CUE3NON**
45	2 at +2.5%	4 at –2.5%	DT-3	80	915F	200X	630 (286)	**WS39**	**X48M28B45CUE3NON**
75	2 at +2.5%	4 at –2.5%	DT-3	80	916A	200X	940 (427)	**WS19**	**X48M28B75CUE3NON**
112.5	2 at +2.5%	4 at –2.5%	DT-3	80	917	200X	1628 (739)	**WS34**	**X48M28B12CUE3NON**
150	2 at +2.5%	4 at –2.5%	DT-3	80	918A	200X	1800 (817)	**WS34**	**X48M28B49CUE3NON**
225	2 at +2.5%	4 at –2.5%	DT-3	80	919EX	201X	3400 (1544)	**WS35**	**X48M28B22CUE3NON**
300	2 at +2.5%	4 at –2.5%	DT-3	80	919EX	201X	4377 (1987)	**WS35**	**X48M28B33CUE3NON**

Note

Frame drawings/dimensions information begins on **Page V2-T2-216**.

Three-Phase—Type DT-3 60 Hz E3 Super Energy-Efficient Harmonic Mitigating

480 Volts to 208Y/120 Volts—Aluminum Windings—Type THR 30-Degree Phase Shift

kVA	Full Capacity Taps FCAN	FCBN	Type	°C Temp. Rise	Frame	Wiring Diagram Number	Weight Lbs (kg)	Weathershield	Catalog Number
15	2 at +2.5%	4 at –2.5%	DT-3	150	—	200X	—	—	**X48M28T15E3THR**
30	2 at +2.5%	4 at –2.5%	DT-3	150	—	200X	—	—	**X48M28T30E3THR**
45	2 at +2.5%	4 at –2.5%	DT-3	150	—	200X	—	—	**X48M28T45E3THR**
75	2 at +2.5%	4 at –2.5%	DT-3	150	—	200X	—	—	**X48M28T75E3THR**
112.5	2 at +2.5%	4 at –2.5%	DT-3	150	—	200X	—	—	**X48M28T12E3THR**
150	2 at +2.5%	4 at –2.5%	DT-3	150	—	200X	—	—	**X48M28T49E3THR**
225	2 at +2.5%	4 at –2.5%	DT-3	150	—	201X	—	—	**X48M28T22E3THR**
300	2 at +2.5%	4 at –2.5%	DT-3	150	—	201X	—	—	**X48M28T33E3THR**
15	2 at +2.5%	4 at –2.5%	DT-3	115	—	200X	—	—	**X48M28F15E3THR**
30	2 at +2.5%	4 at –2.5%	DT-3	115	—	200X	—	—	**X48M28F30E3THR**
45	2 at +2.5%	4 at –2.5%	DT-3	115	—	200X	—	—	**X48M28F45E3THR**
75	2 at +2.5%	4 at –2.5%	DT-3	115	—	200X	—	—	**X48M28F75E3THR**
112.5	2 at +2.5%	4 at –2.5%	DT-3	115	—	200X	—	—	**X48M28F12E3THR**
150	2 at +2.5%	4 at –2.5%	DT-3	115	—	200X	—	—	**X48M28F49E3THR**
225	2 at +2.5%	4 at –2.5%	DT-3	115	—	201X	—	—	**X48M28F22E3THR**
300	2 at +2.5%	4 at –2.5%	DT-3	115	—	201X	—	—	**X48M28F33E3THR**
15	2 at +2.5%	4 at –2.5%	DT-3	80	—	200X	—	—	**X48M28B15E3THR**
30	2 at +2.5%	4 at –2.5%	DT-3	80	—	200X	—	—	**X48M28B30E3THR**
45	2 at +2.5%	4 at –2.5%	DT-3	80	—	200X	—	—	**X48M28B45E3THR**
75	2 at +2.5%	4 at –2.5%	DT-3	80	—	200X	—	—	**X48M28B75E3THR**
112.5	2 at +2.5%	4 at –2.5%	DT-3	80	—	200X	—	—	**X48M28B12E3THR**
150	2 at +2.5%	4 at –2.5%	DT-3	80	—	200X	—	—	**X48M28B49E3THR**
225	2 at +2.5%	4 at –2.5%	DT-3	80	—	201X	—	—	**X48M28B22E3THR**
300	2 at +2.5%	4 at –2.5%	DT-3	80	—	201X	—	—	**X48M28B33E3THR**

Note

Frame drawings/dimensions information begins on **Page V2-T2-216**.

Three-Phase—Type DT-3 60 Hz E3 Super Energy-Efficient Harmonic Mitigating

480 Volts to 208Y/120 Volts—Copper Windings—Type THR 30-Degree Phase Shift

kVA	Full Capacity Taps FCAN	FCBN	Type	°C Temp. Rise	Frame	Wiring Diagram Number	Weight Lbs (kg)	Weathershield	Catalog Number
15	2 at +2.5%	4 at –2.5%	DT-3	150	912D	203X	335 (152)	**WS38**	**X48M28T15CUE3THR**
30	2 at +2.5%	4 at –2.5%	DT-3	150	912D	203X	450 (204)	**WS38**	**X48M28T30CUE3THR**
45	2 at +2.5%	4 at –2.5%	DT-3	150	915F	203X	627 (285)	**WS39**	**X48M28T45CUE3THR**
75	2 at +2.5%	4 at –2.5%	DT-3	150	916A	203X	855 (388)	**WS19**	**X48M28T75CUE3THR**
112.5	2 at +2.5%	4 at –2.5%	DT-3	150	917	203X	1610 (731)	**WS34**	**X48M28T12CUE3THR**
150	2 at +2.5%	4 at –2.5%	DT-3	150	918A	203X	1800 (817)	**WS34**	**X48M28T49CUE3THR**
225	2 at +2.5%	4 at –2.5%	DT-3	150	919EX	203X	3450 (1566)	**WS35**	**X48M28T22CUE3THR**
300	2 at +2.5%	4 at –2.5%	DT-3	150	919EX	203X	3894 (1768)	**WS35**	**X48M28T33CUE3THR**
15	2 at +2.5%	4 at –2.5%	DT-3	115	912D	203X	362 (164)	**WS38**	**X48M28F15CUE3THR**
30	2 at +2.5%	4 at –2.5%	DT-3	115	912D	203X	450 (204)	**WS38**	**X48M28F30CUE3THR**
45	2 at +2.5%	4 at –2.5%	DT-3	115	915F	203X	610 (277)	**WS39**	**X48M28F45CUE3THR**
75	2 at +2.5%	4 at –2.5%	DT-3	115	916A	203X	868 (394)	**WS19**	**X48M28F75CUE3THR**
112.5	2 at +2.5%	4 at –2.5%	DT-3	115	917	203X	1643 (746)	**WS34**	**X48M28F12CUE3THR**
150	2 at +2.5%	4 at –2.5%	DT-3	115	918A	203X	2001 (908)	**WS34**	**X48M28F49CUE3THR**
225	2 at +2.5%	4 at –2.5%	DT-3	115	919EX	203X	3370 (1530)	**WS35**	**X48M28F22CUE3THR**
300	2 at +2.5%	4 at –2.5%	DT-3	115	919EX	203X	3894 (1768)	**WS35**	**X48M28F33CUE3THR**
15	2 at +2.5%	4 at –2.5%	DT-3	80	912D	203X	358 (163)	**WS38**	**X48M28B15CUE3THR**
30	2 at +2.5%	4 at –2.5%	DT-3	80	915F	203X	558 (253)	**WS39**	**X48M28B30CUE3THR**
45	2 at +2.5%	4 at –2.5%	DT-3	80	915F	203X	630 (286)	**WS39**	**X48M28B45CUE3THR**
75	2 at +2.5%	4 at –2.5%	DT-3	80	916A	203X	940 (427)	**WS19**	**X48M28B75CUE3THR**
112.5	2 at +2.5%	4 at –2.5%	DT-3	80	917	203X	1628 (739)	**WS34**	**X48M28B12CUE3THR**
150	2 at +2.5%	4 at –2.5%	DT-3	80	918A	203X	1800 (817)	**WS34**	**X48M28B49CUE3THR**
225	2 at +2.5%	4 at –2.5%	DT-3	80	919EX	203X	3400 (1544)	**WS35**	**X48M28B22CUE3THR**

Note

Frame drawings/dimensions information begins on **Page V2-T2-216**.

Three-Phase—Type DT-3 60 Hz E3 Super Energy-Efficient Harmonic Mitigating

480 Volts to 208Y/120 Volts—Aluminum Windings—Type NEG –15-Degree Phase Shift

kVA	Full Capacity Taps FCAN	FCBN	Type	°C Temp. Rise	Frame	Wiring Diagram Number	Weight Lbs (kg)	Weathershield	Catalog Number
15	2 at +2.5%	4 at -2.5%	DT-3	150	—	200X	—	—	**X48M28T15E3NEG**
30	2 at +2.5%	4 at –2.5%	DT-3	150	—	200X	—	—	**X48M28T30E3NEG**
45	2 at +2.5%	4 at –2.5%	DT-3	150	—	200X	—	—	**X48M28T45E3NEG**
75	2 at +2.5%	4 at –2.5%	DT-3	150	—	200X	—	—	**X48M28T75E3NEG**
112.5	2 at +2.5%	4 at –2.5%	DT-3	150	—	200X	—	—	**X48M28T12E3NEG**
150	2 at +2.5%	4 at –2.5%	DT-3	150	—	200X	—	—	**X48M28T49E3NEG**
225	2 at +2.5%	4 at –2.5%	DT-3	150	—	201X	—	—	**X48M28T22E3NEG**
300	2 at +2.5%	4 at –2.5%	DT-3	150	—	201X	—	—	**X48M28T33E3NEG**
15	2 at +2.5%	4 at –2.5%	DT-3	115	—	200X	—	—	**X48M28F15E3NEG**
30	2 at +2.5%	4 at –2.5%	DT-3	115	—	200X	—	—	**X48M28F30E3NEG**
45	2 at +2.5%	4 at –2.5%	DT-3	115	—	200X	—	—	**X48M28F45E3NEG**
75	2 at +2.5%	4 at –2.5%	DT-3	115	—	200X	—	—	**X48M28F75E3NEG**
112.5	2 at +2.5%	4 at –2.5%	DT-3	115	—	200X	—	—	**X48M28F12E3NEG**
150	2 at +2.5%	4 at –2.5%	DT-3	115	—	200X	—	—	**X48M28F49E3NEG**
225	2 at +2.5%	4 at –2.5%	DT-3	115	—	201X	—	—	**X48M28F22E3NEG**
300	2 at +2.5%	4 at –2.5%	DT-3	115	—	201X	—	—	**X48M28F33E3NEG**
15	2 at +2.5%	4 at –2.5%	DT-3	80	—	200X	—	—	**X48M28B15E3NEG**
30	2 at +2.5%	4 at –2.5%	DT-3	80	—	200X	—	—	**X48M28B30E3NEG**
45	2 at +2.5%	4 at –2.5%	DT-3	80	—	200X	—	—	**X48M28B45E3NEG**
75	2 at +2.5%	4 at –2.5%	DT-3	80	—	200X	—	—	**X48M28B75E3NEG**
112.5	2 at +2.5%	4 at –2.5%	DT-3	80	—	200X	—	—	**X48M28B12E3NEG**
150	2 at +2.5%	4 at –2.5%	DT-3	80	—	200X	—	—	**X48M28B49E3NEG**
225	2 at +2.5%	4 at –2.5%	DT-3	80	—	201X	—	—	**X48M28B22E3NEG**
300	2 at +2.5%	4 at –2.5%	DT-3	80	—	201X	—	—	**X48M28B33E3NEG**

Note

Frame drawings/dimensions information begins on **Page V2-T2-216**.

Three-Phase—Type DT-3 60 Hz E3 Super Energy-Efficient Harmonic Mitigating

480 Volts to 208Y/120 Volts—Copper Windings—Type NEG –15-Degree Phase Shift

kVA	Full Capacity Taps FCAN	FCBN	Type	°C Temp. Rise	Frame	Wiring Diagram Number	Weight Lbs (kg)	Weathershield	Catalog Number
15	2 at +2.5%	4 at –2.5%	DT-3	150	912D	200X	335 (152)	**WS38**	**X48M28T15CUE3NEG**
30	2 at +2.5%	4 at –2.5%	DT-3	150	912D	200X	430 (195)	**WS38**	**X48M28T30CUE3NEG**
45	2 at +2.5%	4 at –2.5%	DT-3	150	915F	200X	627 (285)	**WS39**	**X48M28T45CUE3NEG**
75	2 at +2.5%	4 at –2.5%	DT-3	150	916A	200X	926 (420)	**WS19**	**X48M28T75CUE3NEG**
112.5	2 at +2.5%	4 at –2.5%	DT-3	150	917	200X	1610 (731)	**WS34**	**X48M28T12CUE3NEG**
150	2 at +2.5%	4 at –2.5%	DT-3	150	918A	200X	1800 (817)	**WS34**	**X48M28T49CUE3NEG**
225	2 at +2.5%	4 at –2.5%	DT-3	150	919EX	200X	3580 (1625)	**WS35**	**X48M28T22CUE3NEG**
300	2 at +2.5%	4 at –2.5%	DT-3	150	919EX	200X	3500 (1589)	**WS35**	**X48M28T33CUE3NEG**
15	2 at +2.5%	4 at –2.5%	DT-3	115	912D	200X	353 (160)	**WS38**	**X48M28F15CUE3NEG**
30	2 at +2.5%	4 at –2.5%	DT-3	115	912D	200X	430 (195)	**WS38**	**X48M28F30CUE3NEG**
45	2 at +2.5%	4 at –2.5%	DT-3	115	915F	200X	627 (285)	**WS39**	**X48M28F45CUE3NEG**
75	2 at +2.5%	4 at –2.5%	DT-3	115	916A	200X	926 (420)	**WS19**	**X48M28F75CUE3NEG**
112.5	2 at +2.5%	4 at –2.5%	DT-3	115	917	200X	1628 (739)	**WS34**	**X48M28F12CUE3NEG**
150	2 at +2.5%	4 at –2.5%	DT-3	115	918A	200X	2001 (908)	**WS34**	**X48M28F49CUE3NEG**
225	2 at +2.5%	4 at –2.5%	DT-3	115	919EX	200X	3596 (1633)	**WS35**	**X48M28F22CUE3NEG**
300	2 at +2.5%	4 at –2.5%	DT-3	115	919EX	200X	3891 (1767)	**WS35**	**X48M28F33CUE3NEG**
15	2 at +2.5%	4 at –2.5%	DT-3	80	912D	200X	358 (163)	**WS38**	**X48M28B15CUE3NEG**
30	2 at +2.5%	4 at –2.5%	DT-3	80	915F	200X	558 (253)	**WS39**	**X48M28B30CUE3NEG**
45	2 at +2.5%	4 at –2.5%	DT-3	80	915F	200X	630 (286)	**WS39**	**X48M28B45CUE3NEG**
75	2 at +2.5%	4 at –2.5%	DT-3	80	916A	200X	940 (427)	**WS19**	**X48M28B75CUE3NEG**
112.5	2 at +2.5%	4 at –2.5%	DT-3	80	917	200X	1628 (739)	**WS34**	**X48M28B12CUE3NEG**
150	2 at +2.5%	4 at –2.5%	DT-3	80	918A	200X	1800 (817)	**WS34**	**X48M28B49CUE3NEG**
225	2 at +2.5%	4 at –2.5%	DT-3	80	919EX	200X	3400 (1544)	**WS35**	**X48M28B22CUE3NEG**
300	2 at +2.5%	4 at –2.5%	DT-3	80	920EX	200X	4377 (1987)	**WS35**	**X48M28B33CUE3NEG**

Note

Frame drawings/dimensions information begins on **Page V2-T2-216**.

Three-Phase—Type DT-3 60 Hz E3 Super Energy-Efficient Harmonic Mitigating

480 Volts to 208Y/120 Volts—Aluminum Windings—Type POS +15-Degree Phase Shift

kVA	Full Capacity Taps FCAN	FCBN	Type	°C Temp. Rise	Frame	Wiring Diagram Number	Weight Lbs (kg)	Weathershield	Catalog Number
15	2 at +2.5%	4 at –2.5%	DT-3	150	—	200X	—	—	**X48M28T15E3POS**
30	2 at +2.5%	4 at –2.5%	DT-3	150	—	200X	—	—	**X48M28T30E3POS**
45	2 at +2.5%	4 at –2.5%	DT-3	150	—	200X	—	—	**X48M28T45E3POS**
75	2 at +2.5%	4 at –2.5%	DT-3	150	—	200X	—	—	**X48M28T75E3POS**
112.5	2 at +2.5%	4 at –2.5%	DT-3	150	—	200X	—	—	**X48M28T12E3POS**
150	2 at +2.5%	4 at –2.5%	DT-3	150	—	200X	—	—	**X48M28T49E3POS**
225	2 at +2.5%	4 at –2.5%	DT-3	150	—	201X	—	—	**X48M28T22E3POS**
300	2 at +2.5%	4 at –2.5%	DT-3	150	—	201X	—	—	**X48M28T33E3POS**
15	2 at +2.5%	4 at –2.5%	DT-3	115	—	200X	—	—	**X48M28F15E3POS**
30	2 at +2.5%	4 at –2.5%	DT-3	115	—	200X	—	—	**X48M28F30E3POS**
45	2 at +2.5%	4 at –2.5%	DT-3	115	—	200X	—	—	**X48M28F45E3POS**
75	2 at +2.5%	4 at –2.5%	DT-3	115	—	200X	—	—	**X48M28F75E3POS**
112.5	2 at +2.5%	4 at –2.5%	DT-3	115	—	200X	—	—	**X48M28F12E3POS**
150	2 at +2.5%	4 at –2.5%	DT-3	115	—	200X	—	—	**X48M28F49E3POS**
225	2 at +2.5%	4 at –2.5%	DT-3	115	—	201X	—	—	**X48M28F22E3POS**
300	2 at +2.5%	4 at –2.5%	DT-3	115	—	201X	—	—	**X48M28F33E3POS**
15	2 at +2.5%	4 at –2.5%	DT-3	80	—	200X	—	—	**X48M28B15E3POS**
30	2 at +2.5%	4 at –2.5%	DT-3	80	—	200X	—	—	**X48M28B30E3POS**
45	2 at +2.5%	4 at –2.5%	DT-3	80	—	200X	—	—	**X48M28B45E3POS**
75	2 at +2.5%	4 at –2.5%	DT-3	80	—	200X	—	—	**X48M28B75E3POS**
112.5	2 at +2.5%	4 at –2.5%	DT-3	80	—	200X	—	—	**X48M28B12E3POS**
150	2 at +2.5%	4 at –2.5%	DT-3	80	—	200X	—	—	**X48M28B49E3POS**
225	2 at +2.5%	4 at –2.5%	DT-3	80	—	201X	—	—	**X48M28B22E3POS**
300	2 at +2.5%	4 at –2.5%	DT-3	80	—	201X	—	—	**X48M28B33E3POS**

Note

Frame drawings/dimensions information begins on **Page V2-T2-216**.

Three-Phase—Type DT-3 60 Hz E3 Super Energy-Efficient Harmonic Mitigating

480 Volts to 208Y/120 Volts—Copper Windings—Type POS +15-Degree Phase Shift

kVA	Full Capacity Taps FCAN	FCBN	Type	°C Temp. Rise	Frame	Wiring Diagram Number	Weight Lbs (kg)	Weathershield	Catalog Number
15	2 at +2.5%	4 at –2.5%	DT-3	150	912D	200X	335 (152)	**WS38**	**X48M28T15CUE3POS**
30	2 at +2.5%	4 at –2.5%	DT-3	150	912D	200X	430 (195)	**WS38**	**X48M28T30CUE3POS**
45	2 at +2.5%	4 at –2.5%	DT-3	150	915F	200X	627 (285)	**WS39**	**X48M28T45CUE3POS**
75	2 at +2.5%	4 at –2.5%	DT-3	150	916A	200X	926 (420)	**WS19**	**X48M28T75CUE3POS**
112.5	2 at +2.5%	4 at –2.5%	DT-3	150	917	200X	1610 (731)	**WS34**	**X48M28T12CUE3POS**
150	2 at +2.5%	4 at –2.5%	DT-3	150	918A	200X	1800 (817)	**WS34**	**X48M28T49CUE3POS**
225	2 at +2.5%	4 at –2.5%	DT-3	150	919EX	201X	3580 (1625)	**WS35**	**X48M28T22CUE3POS**
300	2 at +2.5%	4 at –2.5%	DT-3	150	919EX	201X	3500 (1589)	**WS35**	**X48M28T33CUE3POS**
15	2 at +2.5%	4 at –2.5%	DT-3	115	912D	200X	362 (164)	**WS38**	**X48M28F15CUE3POS**
30	2 at +2.5%	4 at –2.5%	DT-3	115	912D	200X	430 (195)	**WS38**	**X48M28F30CUE3POS**
45	2 at +2.5%	4 at –2.5%	DT-3	115	915F	200X	627 (285)	**WS39**	**X48M28F45CUE3POS**
75	2 at +2.5%	4 at –2.5%	DT-3	115	916A	200X	926 (420)	**WS19**	**X48M28F75CUE3POS**
112.5	2 at +2.5%	4 at –2.5%	DT-3	115	917	200X	1628 (739)	**WS34**	**X48M28F12CUE3POS**
150	2 at +2.5%	4 at –2.5%	DT-3	115	918A	200X	2001 (908)	**WS34**	**X48M28F49CUE3POS**
225	2 at +2.5%	4 at –2.5%	DT-3	115	919EX	201X	3596 (1633)	**WS35**	**X48M28F22CUE3POS**
300	2 at +2.5%	4 at –2.5%	DT-3	115	919EX	201X	3891 (1767)	**WS35**	**X48M28F33CUE3POS**
15	2 at +2.5%	4 at –2.5%	DT-3	80	912D	200X	358 (163)	**WS38**	**X48M28B15CUE3POS**
30	2 at +2.5%	4 at –2.5%	DT-3	80	915F	200X	558 (253)	**WS39**	**X48M28B30CUE3POS**
45	2 at +2.5%	4 at –2.5%	DT-3	80	915F	200X	630 (286)	**WS39**	**X48M28B45CUE3POS**
75	2 at +2.5%	4 at –2.5%	DT-3	80	916A	200X	940 (427)	**WS19**	**X48M28B75CUE3POS**
112.5	2 at +2.5%	4 at –2.5%	DT-3	80	917	200X	1628 (739)	**WS34**	**X48M28B12CUE3POS**
150	2 at +2.5%	4 at –2.5%	DT-3	80	918A	200X	1800 (817)	**WS34**	**X48M28B49CUE3POS**
225	2 at +2.5%	4 at –2.5%	DT-3	80	919EX	201X	3400 (1544)	**WS35**	**X48M28B22CUE3POS**
300	2 at +2.5%	4 at –2.5%	DT-3	80	919EX	201X	4377 (1987)	**WS35**	**X48M28B33CUE3POS**

Note

Frame drawings/dimensions information begins on **Page V2-T2-216**.

Accessories

Harmonic mitigating transformers are available with the same options and accessories as general-purpose ventilated transformers. Please refer to Section 2.7 **Page V2-T2-191**.

Technical Data and Specifications

Frequency

Eaton standard dry-type distribution transformers are designed for 60 Hz operation. Transformers required for other frequencies are available and must be specifically designed.

Overload Capacity

Short-term overload is designed into transformers as required by ANSI. Dry-type distribution transformers will deliver 200% nameplate load for one-half hour; 150% load for one hour and 125% load for four hours without being damaged, provided that a constant 50% load precedes and follows the overload. See ANSI C57.96-01.250 for additional limitations.

Continuous overload capacity is not deliberately designed into a transformer because the design objective is to be within the allowed winding temperature rise with nameplate loading.

Insulation System and Temperature Rise

Industry standards classify insulation systems and rise as shown below:

Insulation System Classification

Ambient	+ Winding Rise	+ Hot Spot	= Temp. Class
40°C	55°C	10°C	105°C
40°C	80°C	30°C	150°C
25°C	135°C	20°C	180°C
40°C	115°C	30°C	185°C
40°C	150°C	30°C	220°C

The design life of transformers having different insulation systems is the same—the lower-temperature systems are designed for the same life as the higher-temperature systems.

Enclosures

Eaton ventilated transformers Types DS-3 and DT-3 use a NEMA 2 rated (drip-proof) enclosure as a standard, and are rated NEMA 3R with the addition of weathershields.

Sound Levels

All Eaton 600 volt class general-purpose dry-type distribution transformers are designed to meet NEMA ST-20 levels listed here. Lower sound levels are available and must be designed specially.

Average Sound Levels

NEMA ST-20 Average Sound Level, dB

Equivalent Winding kVA Range	Self-Cooled Ventilated (up to 1.2 kV) K-Factor 1, 4, 9	Self-Cooled Ventilated (up to 1.2 kV) K-Factor 13, 20	Encapsulated (up to 1.2 kV)
3.00 and below	40	40	45
3.01 to 9.00	40	40	45
9.01 to 15.00	45	45	50
15.01 to 30.00	45	45	50
30.01 to 50.00	45	48	50
50.01 to 75.00	50	53	55
75.01 to 112.50	50	53	55
112.51 to 150.00	50	53	55
150.01 to 225.00	55	58	57
225.01 to 300.00	55	58	57
300.01 to 500.00	60	63	59
500.01 to 700.00	62	65	61
700.01 to 1000.00	64	67	63
Greater than 1000	Consult factory	Consult factory	Consult factory

Note

For other ratings or catalog numbers not shown, or for special enclosure types (including stainless steel), refer to Eaton.

Demystifying Harmonic Mitigating Transformer Myths

Aren't "power factor corrected" computer power supplies fixing all harmonics?

The use of power factor corrected computer power supplies is a great first start to reducing harmonic currents in your facility. These are becoming prevalent in server applications, but have not "crossed-over" into the laptop computer/business computer. Remember also that, once the computer power supply harmonics are addressed, you will still need to address the harmonic currents coming from the variety of other equipment in your facility.

Don't K-rated transformers fix harmonics?

The K-rated transformer was created to address the additional heat being produced by standard delta-wye transformers when feeding nonlinear loads. The goal of the K-rated transformer is to dissipate the heat produced over a larger area, thus providing the illusion of correction. The K-rated transformer does nothing to reduce the root issue of harmonic currents or correct power quality issues. Because of their larger size, they also consume additional energy to "do the same work" and are counter-productive to an energy-efficient electrical distribution design.

Don't you need two HMTs for any correction to occur?

The design of HMTs allows them to address different families of harmonic currents in different ways. A single HMT will treat the triplen (3rd, 9th, 15th and so on) harmonic currents in its secondary winding. The 5th, 7th, 17th and 19th harmonic family is treated on a system basis through a technique known as "phase shifting." This phase shift does occur between the Type NON and Type THR, and the Type POS and Type NEG harmonic mitigating transformers—and this can also occur between a Type NON and a standard delta-wye transformer (that is probably already existing within your facility). See our Sample HMT Applications area for additional information.

The cost of HMTs is too high!

While the initial cost of HMTs is typically 1.5 to 4 times the cost of a standard transformer (due to the additional design, materials and labor involved in creating the magnetics necessary to reduce harmonic impact)—to not use an HMT in a harmonic environment will actually cost you 250% more energy loss in the transformer. Due to the relatively long life of a transformer (20–30 years), these additional energy costs easily overshadow the initial one-time first cost increment.

If I use one HMT, don't I need to change all my transformers?

Most facilities have only a percentage (typically 20–25%) of their electrical system that really requires the use of an HMT. This means in a typical building that only a few areas are either critical (meaning high requirements for "clean" power) or have high concentrations of electronic, nonlinear loads—requiring the use of the HMT in those specific areas. The harmonic mitigating transformer is a weapon in your arsenal in providing a complete, properly designed electrical system for today and tomorrow.

Transformer Technology Table Explanation

In understanding the product placement of the HMT, it becomes useful to have some "rule of thumb" understanding to compare products. Looking at one of the aspects of an HMT—price—you can see that, if a standard delta-wye transformer had a cost of one unit, a K-13 transformer would cost about double and an HMT would cost 1.5 to 4 times the unit cost. What's impressive to compare is the next column of information—"Energy Savings." If the amount of energy used to power today's loads is compared against a standard delta-wye transformer (that was never designed to feed today's types of loads), you can easily see that the HMT is designed to meet the issue head-on! Referring to the table's information, you can see that it would take 30% more energy to power the same computer loads with a K-13 transformer, whereas an HMT would take 25% less energy to feed those same computer loads. (This is due to the fact that the HMT has a different design than a standard delta-wye transformer and addresses the root issue of harmonic currents.) A good analogy is to look at the incandescent light bulb versus a compact fluorescent lamp—you might pay a bit more up front, but because of the large energy savings (because of the harmonic loading), you soon realize that the upfront cost pales in comparison to the potential of energy saved. Eaton would be happy to provide you with an estimation calculator to help you determine the amount of payback and return on investment (ROI) based on the incremental cost of the HMT. It's very typical to return the price differential between the HMT and a standard transformer with a few years—thus using the additional 20 to 30 years of energy savings to add to your bottom line.

Transformer Technology Comparison ①

Transformer Type	Cost	Energy Savings	Power Quality
Standard delta-wye	if 1X	if 1X	Not designed for harmonics
K-13	1.5–2X	–0.3X	Bulked up—doesn't help
HMT	2.5X	2.5X	Corrects root issue

Note

① Comparing cost, energy savings and power quality performance between the "commonly used" transformer types.

Sample HMT Applications

Typical Application of Type NON Transformer

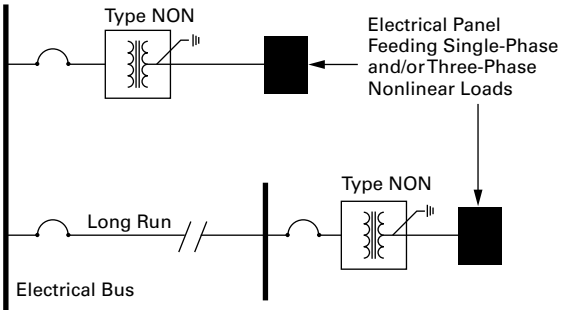

Installation of a Type NON transformer provides an effective treatment of triplen (3rd, 9th, 15th and so on) harmonic currents that are generated by loads connected to the transformer. Triplen harmonic currents are treated in the secondary windings of the transformer due to the transformer's low zero sequence impedance. Type NON transformers do not need to be used in combination with other transformers to treat triplen harmonic currents. A single Type NON transformer may be installed, or multiple units can be applied.

Type NON transformers are an ideal solution for treating triplen harmonics generated by personal computers, printers, fax machines and other office equipment, as well as by single-phase electronic ballasts, and single-phase electronic testing or monitoring devices.

Typical Application of Type NON Transformer with a Standard Delta-Wye Transformer

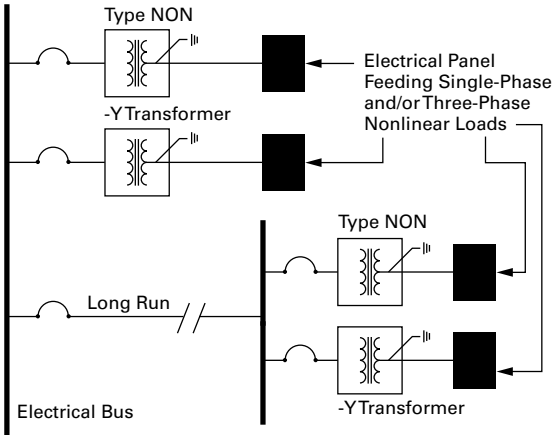

When a delta-wye transformer exists in an electrical distribution system, the addition of a Type NON transformer offers an economical solution for treating harmonic currents. The 30° phase-shift created between a Type NON harmonic mitigating transformer and a delta-wye transformer (standard transformer or K-Factor transformer) provides treatment of 5th, 7th, 17th and 19th harmonic currents. These harmonic currents are canceled in the common electrical bus that feeds the transformers. Additionally, triplen (3rd, 9th, 15th and so on) harmonic currents generated by the loads connected to the Type NON transformer will be treated in the secondary windings of the Type NON transformer due to its low zero sequence impedance. When using two or more transformers to treat harmonics, it is better that the load be split equally between the transformers to receive the maximum benefit.

Note: Triplen currents will still circulate in the delta-wye transformer for additional waste. See figure on **Page V2-T2-92** to correct.

Optimum Application of Type NON and Type THR Transformers

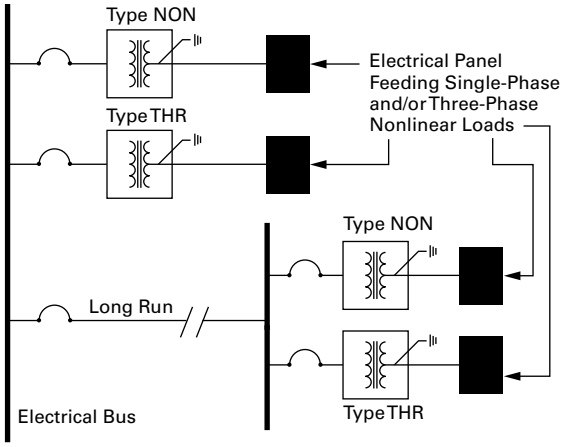

Typical Application of Type NEG and Type POS Transformers

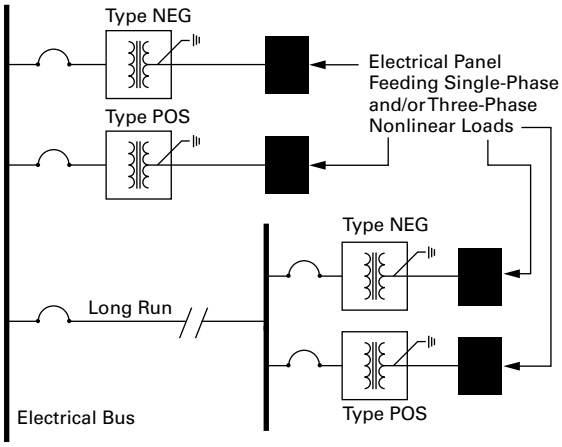

When you're searching for an optimum harmonic correction solution in an electrical distribution system, the combination of a Type NON and Type THR transformer offers a great solution. The 30° phase shift created between Type NON and type THR harmonic mitigating transformers provides treatment of 5th, 7th, 17th and 19th harmonic currents. These harmonic currents are canceled in the common electrical bus that feeds the transformers. Additionally, triplen (3rd, 9th, 15th and so on) harmonic currents generated by the loads will be treated in the secondary windings of HMTs. This will ensure that these currents will not circulate in the primary of the transformer creating additional heat, voltage distortion and wasted energy loss. When using two or more transformers to treat harmonics, it is better that the load be split equally between the transformers to receive the maximum benefit.

The combination of a Type POS (+15° phase-shift) transformer and a Type NEG (–15° phase-shift) transformer effectively treats 5th, 7th, 17th and 19th harmonic currents. These harmonic currents are canceled in the common electrical bus that feeds the transformers. Additionally, triplen (3rd, 9th, 15th and so on) harmonic currents generated by the loads connected to these transformers will be treated in their secondary windings due to their low zero sequence impedance. When using two or more transformers to treat harmonics, it is better that the load be split equally between the transformers to receive the maximum benefit.

Type EP 3–25 kVA

Contents

Description	*Page*
General-Purpose Encapsulated Transformers	
Catalog Number Selection	**V2-T2-94**
Product Selection	**V2-T2-94**
Single-Phase	**V2-T2-94**
Three-Phase	**V2-T2-100**
Accessories	**V2-T2-109**
Technical Data and Specifications	**V2-T2-109**

Product Description

Note: The following pages provide listings for most standard transformer ratings and catalog numbers. For other ratings or catalog numbers not shown, or for special enclosure types (including stainless steel), refer to Eaton.

Type EP and EPT

- Encapsulated design
- Suitable for indoor or outdoor applications
- Totally enclosed, non-ventilated enclosures
- Enclosures are NEMA 3R rated
- Mountable in any position indoors and upright-only outdoors
- 180°C insulation system
- 115°C rise standard; 80°C optional
- Available in ratings through 37.5 kVA single-phase; 75 kVA three-phase

Application Description

The basic purpose of a transformer is voltage transformation as near as practically possible to the load for economy and distribution of power. Typical loads for dry-type distribution transformers include lighting, heating, air conditioners, fans and machine tools. Such loads are found in commercial, institutional, industrial and residential structures.

Features, Benefits and Functions

- 60 Hz operation (50/60 Hz optional)
- Short-term overload capability as required by ANSI
- Meet NEMA ST-20 sound levels

Standards and Certifications

- UL listed
- CSA certified

Listed

Industry Standards

All Eaton dry-type distribution and control transformers are built and tested in accordance with applicable NEMA, ANSI and IEEE Standards. All 600 volt class transformers are UL listed unless otherwise noted.

Seismically Qualified

Eaton manufactured dry-type distribution transformers are seismically qualified and exceed requirements of the Uniform Building Code (UBC), International Building Code (IBC), and California Code Title 24.

Catalog Number Selection

Please refer to Section 2.7 **Page V2-T2-187**.

Product Selection

Additional Product Selection information begins on **Page V2-T2-189**.

Single-Phase Encapsulated—Type EP, 60 Hz

Type EP 3–37.5 kVA

120 x 240 Volts to 120/240 Volts ①

kVA	Full Capacity Taps FCAN	FCBN	Type	°C Temp. Rise	Frame	Wiring Diagram Number	Weight Lbs (kg)	Weathershield	Catalog Number
0.5	—	—	EP	115	FR57P	3E	16 (7)	Indoor–Outdoor	**S10N11P51P**
1	—	—	EP	115	FR67P	3E	31 (14)	Indoor–Outdoor	**S10N11P01P**
1.5	—	—	EP	115	FR67P	3E	42 (19)	Indoor–Outdoor	**S10N11P16P**
2	—	—	EP	115	FR68P	3E	42 (19)	Indoor–Outdoor	**S10N11P02P**
3	—	—	EP	115	FR176	3E	55 (25)	Indoor–Outdoor	**S10N11S03N**
5	—	—	EP	115	FR177	3E	113 (51)	Indoor–Outdoor	**S10N11S05N**
7.5	—	—	EP	115	FR178	3E	123 (56)	Indoor–Outdoor	**S10N11S07N**
10	—	—	EP	115	FR179	3E	193 (88)	Indoor–Outdoor	**S10N11S10N**
15	—	—	EP	115	FR180	3E	216 (98)	Indoor–Outdoor	**S10N11S15N**
25	—	—	EP	115	FR182	3E	375 (170)	Indoor–Outdoor	**S10N11S25N**

208 Volts to 120/240 Volts ①

kVA	Full Capacity Taps FCAN	FCBN	Type	°C Temp. Rise	Frame	Wiring Diagram Number	Weight Lbs (kg)	Weathershield	Catalog Number
0.5	—	—	EP	115	FR57P	26A	16 (7)	Indoor–Outdoor	**S29N11P51P**
1	—	—	EP	115	FR67P	26A	31 (14)	Indoor–Outdoor	**S29N11P01P**
1.5	—	—	EP	115	FR67P	26A	42 (19)	Indoor–Outdoor	**S29N11P16P**
2	—	—	EP	115	FR68P	26A	42 (19)	Indoor–Outdoor	**S29N11P02P**
3	—	—	EP	115	FR176	26A	65 (30)	Indoor–Outdoor	**S29N11S03N**
5	—	—	EP	115	FR177	26A	113 (51)	Indoor–Outdoor	**S29N11S05N**
7.5	—	—	EP	115	FR178	26A	123 (56)	Indoor–Outdoor	**S29N11S07N**
10	—	—	EP	115	FR179	26A	193 (88)	Indoor–Outdoor	**S29N11S10N**
15	—	—	EP	115	FR180	26A	216 (98)	Indoor–Outdoor	**S29N11S15N**
25	—	—	EP	115	FR182	26A	395 (179)	Indoor–Outdoor	**S29N11S25N**

Notes

① Contact Eaton for availability of 0.05–0.25 kVA designs.

Contact your local Eaton sales office for CE Mark transformer requirements. For other ratings or catalog numbers not shown, or for special enclosure types (including stainless steel), refer to Eaton. Frame drawings/dimensions information begins on **Page V2-T2-216**.

Single-Phase Encapsulated—Type EP, 60 Hz

277 Volts to 120/240 Volts ①

kVA	Full Capacity Taps FCAN	FCBN	Type	°C Temp. Rise	Frame	Wiring Diagram Number	Weight Lbs (kg)	Weathershield	Catalog Number
0.5	—	—	EP	115	FR58AP	524A	26 (12)	Indoor–Outdoor	**S27N11P51P**
1	—	—	EP	115	FR59AP	524A	31 (14)	Indoor–Outdoor	**S27N11P01P**
1.5	—	—	EP	115	FR67P	524A	42 (19)	Indoor–Outdoor	**S27N11P16P**
2	—	—	EP	115	FR176P	524A	65 (30)	Indoor–Outdoor	**S27N11P02P**
3	—	—	EP	115	FR176	524A	55 (25)	Indoor–Outdoor	**S27N11S03N**
5	—	—	EP	115	FR177	524A	113 (51)	Indoor–Outdoor	**S27N11S05N**
7.5	—	—	EP	115	FR178	524A	123 (56)	Indoor–Outdoor	**S27N11S07N**
10	—	—	EP	115	FR179	524A	193 (88)	Indoor–Outdoor	**S27N11S10N**
15	—	—	EP	115	FR180	524A	180 (82)	Indoor–Outdoor	**S27N11S15N**
25	—	—	EP	115	FR182	524A	375 (170)	Indoor–Outdoor	**S27N11S25N**

240 x 480 Volts to 120/240 Volts

kVA	Full Capacity Taps FCAN	FCBN	Type	°C Temp. Rise	Frame	Wiring Diagram Number	Weight Lbs (kg)	Weathershield	Catalog Number
0.050	—	—	EP	115	FR52	3A	7 (3)	Indoor–Outdoor	**S20N11S81N**
0.075	—	—	EP	115	FR54	3A	7 (3)	Indoor–Outdoor	**S20N11S85N**
0.100	—	—	EP	115	FR54	3A	7 (3)	Indoor–Outdoor	**S20N11S82N**
0.150	—	—	EP	115	FR55	3A	8 (4)	Indoor–Outdoor	**S20N11S83N**
0.25	—	—	EP	115	FR57P	3A	12 (5)	Indoor–Outdoor	**S20N11P26P**
0.5	—	—	EP	115	FR57P	3A	16 (7)	Indoor–Outdoor	**S20N11P51P**
0.75	—	—	EP	115	FR58AP	3A	26 (12)	Indoor–Outdoor	**S20N11P76P**
1	—	—	EP	115	FR67P	3A	31 (14)	Indoor–Outdoor	**S20N11P01P**
1.5	—	—	EP	115	FR67P	3A	42 (19)	Indoor–Outdoor	**S20N11P16P**
2	—	—	EP	115	FR68P	3A	42 (19)	Indoor–Outdoor	**S20N11P02P**
3	—	—	EP	115	FR176	3A	65 (30)	Indoor–Outdoor	**S20N11S03N**
3	②	②	EP	115	FR176	3A	65 (30)	Indoor–Outdoor	**S20K11S03N**
5	—	—	EP	115	FR177	3A	113 (51)	Indoor–Outdoor	**S20N11S05N**
5	②	②	EP	115	FR177	9A	105 (48)	Indoor–Outdoor	**S20K11S05N**
7.5	—	—	EP	115	FR178	3A	105 (48)	Indoor–Outdoor	**S20N11S07N**
7.5	②	②	EP	115	FR178	9A	123 (56)	Indoor–Outdoor	**S20K11S07N**
10	—	—	EP	115	FR179	3A	193 (88)	Indoor–Outdoor	**S20N11S10N**
10	②	②	EP	115	FR179	9A	193 (88)	Indoor–Outdoor	**S20K11S10N**
15	—	—	EP	115	FR180	3A	216 (98)	Indoor–Outdoor	**S20N11S15N**
15	③	③	EP	115	FR180	23A	216 (98)	Indoor–Outdoor	**S20L11S15N**
25	—	—	EP	115	FR182	3A	385 (175)	Indoor–Outdoor	**S20N11S25N**
25	③	③	EP	115	FR182	23A	375 (170)	Indoor–Outdoor	**S20L11S25N**
37.5	③	③	EP	115	FR300A	248A	735 (334)	Indoor–Outdoor	**S20L11S37** ④

Notes

① Contact Eaton for availability of 0.05–0.25 kVA designs.
② 1 at +10% FCBN at 240 volts; 2 at –5% FCBN at 480 volts.
③ 2 at +5% FCBN at 240 volts; 4 at –2.5% FCBN at 480 volts.
④ Floor-mount only.

Contact your local Eaton sales office for CE Mark transformer requirements. For other ratings or catalog numbers not shown, or for special enclosure types (including stainless steel), refer to Eaton. Frame drawings/dimensions information begins on **Page V2-T2-216**.

Single-Phase Encapsulated—Type EP, 60 Hz

190/200/208/220 x 380/400/416/440 Volts to 110/220 Volts 50/60 Hz—Export Model IP 22 Rated

kVA	Full Capacity Taps FCAN	FCBN	Type	°C Temp. Rise	Frame	Wiring Diagram Number	Weight Lbs (kg)	Weathershield	Catalog Number
0.5	—	—	EP	115	FR67	538A	42 (19)	Indoor–Outdoor	**S40N14S51CE**
1	—	—	EP	115	FR67	538A	42 (19)	Indoor–Outdoor	**S40N14S01CE**
1.5	—	—	EP	115	FR176	538A	65 (30)	Indoor–Outdoor	**S40N14S16CE**
2	—	—	EP	115	FR176	538A	65 (30)	Indoor–Outdoor	**S40N14S02CE**
3	—	—	EP	115	FR177	538A	113 (51)	Indoor–Outdoor	**S40N14S03CE**
5	—	—	EP	115	FR178	538A	140 (64)	Indoor–Outdoor	**S40N14S05CE**
7.5	—	—	EP	115	FR179	538A	193 (88)	Indoor–Outdoor	**S40N14S07CE**
10	—	—	EP	115	FR180	538A	216 (98)	Indoor–Outdoor	**S40N14S10CE**
15	—	—	EP	115	FR182	538A	375 (170)	Indoor–Outdoor	**S40N14S15CE**

120/208/240/277 Volts to 120/240 Volts 60 Hz

kVA	Full Capacity Taps FCAN	FCBN	Type	°C Temp. Rise	Frame	Wiring Diagram Number	Weight Lbs (kg)	Weathershield	Catalog Number
1	—	—	EP	115	FR67P	①	42 (19)	Indoor–Outdoor	**S54N11P01**
1.5	—	—	EP	115	FR176P	①	65 (30)	Indoor–Outdoor	**S54N11P16**
2	—	—	EP	115	FR176P	①	65 (30)	Indoor–Outdoor	**S54N11P02**
3	—	—	EP	115	FR177	①	113 (51)	Indoor–Outdoor	**S54N11S03**
5	—	—	EP	115	FR178	①	140 (64)	Indoor–Outdoor	**S54N11S05**
7.5	—	—	EP	115	FR179	①	193 (88)	Indoor–Outdoor	**S54N11S07**
10	—	—	EP	115	FR180	①	216 (98)	Indoor–Outdoor	**S54N11S10**

240 x 480 Volts to 120/240 Volts Stainless Steel ②

kVA	Full Capacity Taps FCAN	FCBN	Type	°C Temp. Rise	Frame	Wiring Diagram Number	Weight Lbs (kg)	Weathershield	Catalog Number
3	—	—	EP	115	FR176	3A	65 (30)	Indoor–Outdoor	**S20N11S03SS**
5	—	—	EP	115	FR177	3A	113 (51)	Indoor–Outdoor	**S20N11S05SS**
7.5	—	—	EP	115	FR178	3A	123 (56)	Indoor–Outdoor	**S20N11S07SS**
10	—	—	EP	115	FR179	3A	193 (88)	Indoor–Outdoor	**S20N11S10SS**
15	—	—	EP	115	FR180	3A	205 (93)	Indoor–Outdoor	**S20N11S15SS**
25	—	—	EP	115	FR182	3A	375 (170)	Indoor–Outdoor	**S20N11S25SS**

Notes

① Refer to your local Eaton sales office.

② NEMA 3R, 304 stainless steel enclosure; 316 stainless steel enclosure available as an option.

Contact your local Eaton sales office for CE Mark transformer requirements. For other ratings or catalog numbers not shown, or for special enclosure types (including stainless steel), refer to Eaton. Frame drawings/dimensions information begins on **Page V2-T2-216**.

Single-Phase Encapsulated—Type EP, 60 Hz

480 Volts to 120/240 Volts

kVA	Full Capacity Taps FCAN	FCBN	Type	°C Temp. Rise	Frame	Wiring Diagram Number	Weight Lbs (kg)	Weathershield	Catalog Number
1	—	2 at –5%	EP	115	FR67P	2D	31 (14)	Indoor–Outdoor	**S48G11P01P**
1.5	—	2 at –5%	EP	115	FR67P	2D	42 (19)	Indoor–Outdoor	**S48G11P16P**
2	—	2 at –5%	EP	115	FR68P	2D	42 (19)	Indoor–Outdoor	**S48G11P02P**
3	—	2 at –5%	EP	115	FR176	2D	65 (30)	Indoor–Outdoor	**S48G11S03N**
3	2 at +2.5%	2 at –2.5%	EP	115	FR176	16A	65 (30)	Indoor–Outdoor	**S48D11S03N**
5	—	2 at –5%	EP	115	FR177	2D	113 (51)	Indoor–Outdoor	**S48G11S05N**
5	2 at +2.5%	2 at –2.5%	EP	115	FR177	16A	113 (51)	Indoor–Outdoor	**S48D11S05N**
7.5	—	2 at –5%	EP	115	FR178	2D	123 (56)	Indoor–Outdoor	**S48G11S07N**
7.5	2 at +2.5%	2 at –2.5%	EP	115	FR178	16A	123 (56)	Indoor–Outdoor	**S48D11S07N**
10	—	2 at –5%	EP	115	FR179	2D	193 (88)	Indoor–Outdoor	**S48G11S10N**
10	2 at +2.5%	2 at –2.5%	EP	115	FR179	16A	193 (88)	Indoor–Outdoor	**S48D11S10N**
15	—	2 at –5%	EP	115	FR180	2D	216 (98)	Indoor–Outdoor	**S48G11S15N**
15	2 at +2.5%	2 at –2.5%	EP	115	FR180	16A	216 (98)	Indoor–Outdoor	**S48D11S15N**
25	—	2 at –5%	EP	115	FR182	2D	385 (175)	Indoor–Outdoor	**S48G11S25N**
25	2 at +2.5%	4 at –2.5%	EP	115	FR132	83A	410 (186)	Indoor–Outdoor	**S48M11S25N**

480 Volts to 120/240 Volts Stainless Steel, Copper Windings ①

kVA	Full Capacity Taps FCAN	FCBN	Type	°C Temp. Rise	Frame	Wiring Diagram Number	Weight Lbs (kg)	Weathershield	Catalog Number
10	2 at +2.5%	2 at –2.5%	EP	115	FR179	16A	210 (95)	Indoor–Outdoor	**S48D11S10CUSS**
15	2 at +2.5%	2 at –2.5%	EP	115	FR180	16A	235 (107)	Indoor–Outdoor	**S48D11S15SSCU**
25	2 at +2.5%	4 at –2.5%	EP	115	FR182	83A	415 (188)	Indoor–Outdoor	**S48M11S25SSCU**

600 Volts to 120/240 Volts

kVA	Full Capacity Taps FCAN	FCBN	Type	°C Temp. Rise	Frame	Wiring Diagram Number	Weight Lbs (kg)	Weathershield	Catalog Number
0.5	—	2 at –5%	EP	115	FR57P	2I	16 (7)	Indoor–Outdoor	**S60G11P51P**
0.75	—	2 at –5%	EP	115	FR58AP	2I	26 (12)	Indoor–Outdoor	**S60G11P76P**
1	—	2 at –5%	EP	115	FR67P	2I	31 (14)	Indoor–Outdoor	**S60G11P01P**
1.5	—	2 at –5%	EP	115	FR67P	2I	42 (19)	Indoor–Outdoor	**S60G11P16P**
2	—	2 at –5%	EP	115	FR68P	2I	42 (19)	Indoor–Outdoor	**S60G11P02P**
3	—	2 at –5%	EP	115	FR176	2I	65 (30)	Indoor–Outdoor	**S60G11S03N**
5	—	2 at –5%	EP	115	FR177	2I	105 (48)	Indoor–Outdoor	**S60G11S05N**
7.5	—	2 at –5%	EP	115	FR178	2I	123 (56)	Indoor–Outdoor	**S60G11S07N**
10	—	2 at –5%	EP	115	FR179	2I	193 (88)	Indoor–Outdoor	**S60G11S10N**
15	—	4 at –2.5%	EP	115	FR180	527A	216 (98)	Indoor–Outdoor	**S60J11S15N**
25	—	4 at –2.5%	EP	115	FR182	527A	385 (175)	Indoor–Outdoor	**S60J11S25N**
25	2 at +2.5%	4 at –2.5%	EP	115	FR132	83B	395 (180)	Indoor–Outdoor	**S60M11S25N**

Notes

① NEMA 3R, 304 stainless steel enclosure; 316 stainless steel enclosure available as an option.

Contact your local Eaton sales office for CE Mark transformer requirements. For other ratings or catalog numbers not shown, or for special enclosure types (including stainless steel), refer to Eaton. Frame drawings/dimensions information begins on **Page V2-T2-216**.

Single-Phase Shielded—Type EP, 60 Hz

120 x 240 Volts to 120/240 Volts

kVA	Full Capacity Taps FCAN	FCBN	Type	°C Temp. Rise	Frame	Wiring Diagram Number	Weight Lbs (kg)	Weathershield	Catalog Number
3	—	—	EP	115	FR176	90B	50 (23)	Indoor–Outdoor	**S10N11E03N**
5	—	—	EP	115	FR177	90B	90 (41)	Indoor–Outdoor	**S10N11E05N**
7.5	—	—	EP	115	FR178	90B	123 (56)	Indoor–Outdoor	**S10N11E07N**
10	—	—	EP	115	FR179	90B	210 (95)	Indoor–Outdoor	**S10N11E10N**
15	—	—	EP	115	FR180	90B	205 (93)	Indoor–Outdoor	**S10N11E15N**
25	—	—	EP	115	FR182	90B	375 (170)	Indoor–Outdoor	**S10N11E25N**

120 Volts to 120 Volts

kVA	Full Capacity Taps FCAN	FCBN	Type	°C Temp. Rise	Frame	Wiring Diagram Number	Weight Lbs (kg)	Weathershield	Catalog Number
3	—	—	EP	115	FR176	77A	60 (27)	Indoor–Outdoor	**S12N12E03N**
5	—	—	EP	115	FR177	77A	100 (45)	Indoor–Outdoor	**S12N12E05N**
7.5	—	—	EP	115	FR178	77A	123 (56)	Indoor–Outdoor	**S12N12E07N**
10	—	—	EP	115	FR179	77A	180 (82)	Indoor–Outdoor	**S12N12E10N**
15	—	—	EP	115	FR180	77A	216 (98)	Indoor–Outdoor	**S12N12E15N**
25	—	—	EP	115	FR182	77A	375 (170)	Indoor–Outdoor	**S12N12E25N**

208 Volts to 120/240 Volts

kVA	Full Capacity Taps FCAN	FCBN	Type	°C Temp. Rise	Frame	Wiring Diagram Number	Weight Lbs (kg)	Weathershield	Catalog Number
3	—	—	EP	115	FR176	578A	60 (27)	Indoor–Outdoor	**S29N11E03N**
5	—	—	EP	115	FR177	578A	135 (61)	Indoor–Outdoor	**S29N11E05N**
7.5	—	—	EP	115	FR178	578A	95 (43)	Indoor–Outdoor	**S29N11E07N**
10	—	—	EP	115	FR179	578A	165 (75)	Indoor–Outdoor	**S29N11E10N**
15	—	—	EP	115	FR180	578A	185 (94)	Indoor–Outdoor	**S29N11E15N**
25	—	—	EP	115	FR182	578A	375 (170)	Indoor–Outdoor	**S29N11E25N**

208 Volts to 208 Volts

kVA	Full Capacity Taps FCAN	FCBN	Type	°C Temp. Rise	Frame	Wiring Diagram Number	Weight Lbs (kg)	Weathershield	Catalog Number
3	—	—	EP	115	FR176	77B	65 (30)	Indoor–Outdoor	**S29N29E03N**
5	—	—	EP	115	FR177	77B	113 (51)	Indoor–Outdoor	**S29N29E05N**
7.5	—	—	EP	115	FR178	77B	123 (56)	Indoor–Outdoor	**S29N29E07N**
10	—	—	EP	115	FR179	77B	195 (89)	Indoor–Outdoor	**S29N29E10N**
15	—	—	EP	115	FR180	77B	216 (98)	Indoor–Outdoor	**S29N29E15N**
25	—	—	EP	115	FR182	77B	375 (170)	Indoor–Outdoor	**S29N29E25N**

Note

Contact your local Eaton sales office for CE Mark transformer requirements. For other ratings or catalog numbers not shown, or for special enclosure types (including stainless steel), refer to Eaton. Frame drawings/dimensions information begins on **Page V2-T2-216**.

Single-Phase Shielded—Type EP, 60 Hz

240 Volts to 240 Volts

kVA	Full Capacity Taps FCAN	FCBN	Type	°C Temp. Rise	Frame	Wiring Diagram Number	Weight Lbs (kg)	Weathershield	Catalog Number
3	—	—	EP	115	FR176	77C	65 (30)	Indoor–Outdoor	**S24N24E03N**
5	—	—	EP	115	FR177	77C	113 (51)	Indoor–Outdoor	**S24N24E05N**
7.5	—	—	EP	115	FR178	77C	123 (56)	Indoor–Outdoor	**S24N24E07N**
10	—	—	EP	115	FR179	77C	193 (88)	Indoor–Outdoor	**S24N24E10N**
15	—	—	EP	115	FR180	77C	216 (98)	Indoor–Outdoor	**S24N24E15N**
25	—	—	EP	115	FR182	77C	375 (170)	Indoor–Outdoor	**S24N24E25N**

277 Volts to 120/240 Volts

kVA	Full Capacity Taps FCAN	FCBN	Type	°C Temp. Rise	Frame	Wiring Diagram Number	Weight Lbs (kg)	Weathershield	Catalog Number
3	—	—	EP	115	FR176	513B	65 (30)	Indoor–Outdoor	**S27N11E03N**
5	—	—	EP	115	FR177	513B	113 (51)	Indoor–Outdoor	**S27N11E05N**
7.5	—	—	EP	115	FR178	513B	75 (34)	Indoor–Outdoor	**S27N11E07N**
10	—	—	EP	115	FR179	513B	162 (74)	Indoor–Outdoor	**S27N11E10N**
15	—	—	EP	115	FR180	513B	216 (98)	Indoor–Outdoor	**S27N11E15N**
25	—	—	EP	115	FR182	513B	375 (170)	Indoor–Outdoor	**S27N11E25N**

240 x 480 Volts to 120/240 Volts

kVA	Full Capacity Taps FCAN	FCBN	Type	°C Temp. Rise	Frame	Wiring Diagram Number	Weight Lbs (kg)	Weathershield	Catalog Number
0.25	—	—	EP	115	FR57P	90A	12 (5)	Indoor–Outdoor	**S20N11E26P**
0.50	—	—	EP	115	FR57P	90A	16 (7)	Indoor–Outdoor	**S20N11E51P**
0.75	—	—	EP	115	FR58AP	90A	26 (12)	Indoor–Outdoor	**S20N11E76P**
1	—	—	EP	115	FR67P	90A	31 (14)	Indoor–Outdoor	**S20N11E01P**
1.5	—	—	EP	115	FR67P	90A	42 (19)	Indoor–Outdoor	**S20N11E16P**
2	—	—	EP	115	FR68P	90A	42 (19)	Indoor–Outdoor	**S20N11E02P**
3	—	—	EP	115	FR176	90A	65 (30)	Indoor–Outdoor	**S20N11E03A**
5	—	—	EP	115	FR177	90A	113 (51)	Indoor–Outdoor	**S20N11E05A**
7.5	—	—	EP	115	FR178	90A	123 (56)	Indoor–Outdoor	**S20N11E07A**
10	—	—	EP	115	FR179	90A	166 (75)	Indoor–Outdoor	**S20N11E10A**
15	—	—	EP	115	FR180	90A	216 (98)	Indoor–Outdoor	**S20N11E15A**
25	①	①	EP	115	FR182	526A	375 (170)	Indoor–Outdoor	**S20L11E25A**

Notes

① 2 at +5% FCBN at 240 volts; 4 at –2.5% FCBN at 480 volts.

Contact your local Eaton sales office for CE Mark transformer requirements. For other ratings or catalog numbers not shown, or for special enclosure types (including stainless steel), refer to Eaton. Frame drawings/dimensions information begins on **Page V2-T2-216**.

Three-Phase Encapsulated—Type EPT, 60 Hz

240 Delta Volts to 208Y/120 Volts

kVA	Full Capacity Taps FCAN	FCBN	Type	°C Temp. Rise	Frame	Wiring Diagram Number	Weight Lbs (kg)	Weathershield	Catalog Number
9	—	2 at –5%	EPT	115	FR103	70C	190 (86)	Indoor–Outdoor	**Y24G28T09N** ①
15	—	2 at –5%	EPT	115	FR95	70C	275 (125)	Indoor–Outdoor	**Y24G28T15N** ①
30	2 at +2.5%	4 at –2.5%	EPT	115	FR243	84C	422 (191)	Indoor–Outdoor	**Y24M28T30N**
45	2 at +2.5%	4 at –2.5%	EPT	115	FR244	84C	660 (299)	Indoor–Outdoor	**Y24M28T45N**

380 Delta Volts to 190Y/110 Volts

kVA	Full Capacity Taps FCAN	FCBN	Type	°C Temp. Rise	Frame	Wiring Diagram Number	Weight Lbs (kg)	Weathershield	Catalog Number
3	—	2 at –5%	EPT	115	FR201	70F	116 (53)	Indoor–Outdoor	**Y38G19T03A** ①
6	—	2 at –5%	EPT	115	FR200	70F	165 (75)	Indoor–Outdoor	**Y38G19T06A** ①
9	—	2 at –5%	EPT	115	FR95	70F	275 (125)	Indoor–Outdoor	**Y38G19T09A** ①
15	—	2 at –5%	EPT	115	FR95	72R	275 (125)	Indoor–Outdoor	**Y38G19T15A** ①
30	2 at +2.5%	4 at –2.5%	EPT	115	FR243	84AC	422 (191)	Indoor–Outdoor	**Y38M19T30A**
45	2 at +2.5%	4 at –2.5%	EPT	115	FR244	84AC	660 (299)	Indoor–Outdoor	**Y38M19T45A**
75	2 at +2.5%	4 at –2.5%	EPT	115	FR245	84AC	1275 (580)	Indoor–Outdoor	**Y38M19T75A** ②

380 Delta Volts to 208Y/120 Volts

kVA	Full Capacity Taps FCAN	FCBN	Type	°C Temp. Rise	Frame	Wiring Diagram Number	Weight Lbs (kg)	Weathershield	Catalog Number
3	—	2 at –5%	EPT	115	FR201	70D	116 (53)	Indoor–Outdoor	**Y38G28T03A** ①
6	—	2 at –5%	EPT	115	FR200	70F	165 (75)	Indoor–Outdoor	**Y38G28T06A** ①
9	—	2 at –5%	EPT	115	FR103	70D	185 (84)	Indoor–Outdoor	**Y38G28T09A** ①
15	—	2 at –5%	EPT	115	FR95	70D	275 (125)	Indoor–Outdoor	**Y38G28T15A** ①
30	2 at +2.5%	4 at –2.5%	EPT	115	FR243	84H	422 (191)	Indoor–Outdoor	**Y38M28T30A**
45	2 at +2.5%	4 at –2.5%	EPT	115	FR244	84R	660 (299)	Indoor–Outdoor	**Y38M28T45A**
75	2 at +2.5%	4 at –2.5%	EPT	115	FR245	84R	1275 (580)	Indoor–Outdoor	**Y38M28T75A** ②

Notes

① T-T (Scott T) connected secondary.

② Floor-mount only.

Contact your local Eaton sales office for CE Mark transformer requirements. For other ratings or catalog numbers not shown, or for special enclosure types (including stainless steel), refer to Eaton. Frame drawings/dimensions information begins on **Page V2-T2-216**.

Three-Phase Encapsulated—Type EPT, 60 Hz

380 Delta Volts to 220Y/127 Volts

kVA	Full Capacity Taps FCAN	FCBN	Type	°C Temp. Rise	Frame	Wiring Diagram Number	Weight Lbs (kg)	Weathershield	Catalog Number
3	—	2 at –5%	EPT	115	FR201	70F	116 (53)	Indoor–Outdoor	**Y38G31T03A** ①
6	—	2 at –5%	EPT	115	FR200	70F	165 (75)	Indoor–Outdoor	**Y38G31T06A** ①
9	—	2 at –5%	EPT	115	FR103	70M	195 (89)	Indoor–Outdoor	**Y38G31T09A** ①
15	—	2 at –5%	EPT	115	FR95	70F	275 (125)	Indoor–Outdoor	**Y38G31T15A** ①
30	2 at +2.5%	4 at –2.5%	EPT	115	FR243	84R	422 (191)	Indoor–Outdoor	**Y38M31T30A**
45	2 at +2.5%	4 at –2.5%	EPT	115	FR244	84R	660 (299)	Indoor–Outdoor	**Y38M31T45A**
75	2 at +2.5%	4 at –2.5%	EPT	115	FR245	84R	1275 (580)	Indoor–Outdoor	**Y38M31T75A** ②

380 Delta Volts to 220 Delta Volts

kVA	Full Capacity Taps FCAN	FCBN	Type	°C Temp. Rise	Frame	Wiring Diagram Number	Weight Lbs (kg)	Weathershield	Catalog Number
3	—	2 at –5%	EPT	115	FR201	74K	116 (53)	Indoor–Outdoor	**Y38G25T03A** ①
6	—	2 at –5%	EPT	115	FR200	74K	180 (82)	Indoor–Outdoor	**Y38G25T06A** ①
9	—	2 at –5%	EPT	115	FR103	74K	195 (89)	Indoor–Outdoor	**Y38G25T09A** ①
15	—	2 at –5%	EPT	115	FR95	74K	275 (125)	Indoor–Outdoor	**Y38G25T15A** ①
30	2 at +2.5%	4 at –2.5%	EPT	115	FR243	③	422 (191)	Indoor–Outdoor	**Y38M25T30A**
45	2 at +2.5%	4 at –2.5%	EPT	115	FR244	③	660 (299)	Indoor–Outdoor	**Y38M25T45A**
75	2 at +2.5%	4 at –2.5%	EPT	115	FR245	③	1275 (580)	Indoor–Outdoor	**Y38M25T75A** ②

380 Delta Volts to 380Y/220 Volts

kVA	Full Capacity Taps FCAN	FCBN	Type	°C Temp. Rise	Frame	Wiring Diagram Number	Weight Lbs (kg)	Weathershield	Catalog Number
3	—	2 at –5%	EPT	115	FR201	70D	116 (53)	Indoor–Outdoor	**Y38G37T03A** ①
6	—	2 at –5%	EPT	115	FR200	70D	165 (75)	Indoor–Outdoor	**Y38G37T06A** ①
9	—	2 at –5%	EPT	115	FR103	70D	180 (82)	Indoor–Outdoor	**Y38G37T09A** ①
15	—	2 at –5%	EPT	115	FR95	70D	275 (125)	Indoor–Outdoor	**Y38G37T15A** ①
30	2 at +2.5%	4 at –2.5%	EPT	115	FR243	84H	422 (191)	Indoor–Outdoor	**Y38M37T30A**
45	2 at +2.5%	4 at –2.5%	EPT	115	FR244	84H	660 (299)	Indoor–Outdoor	**Y38M37T45A**
75	2 at +2.5%	4 at –2.5%	EPT	115	FR245	84H	1275 (580)	Indoor–Outdoor	**Y38M37T75A** ②

380 Delta Volts to 480Y/277 Volts

kVA	Full Capacity Taps FCAN	FCBN	Type	°C Temp. Rise	Frame	Wiring Diagram Number	Weight Lbs (kg)	Weathershield	Catalog Number
3	—	2 at –5%	EPT	115	FR201	70F	116 (53)	Indoor–Outdoor	**Y38G47T03A** ①
6	—	2 at –5%	EPT	115	FR200	70F	180 (82)	Indoor–Outdoor	**Y38G47T06A** ①
9	—	2 at –5%	EPT	115	FR103	70F	166 (75)	Indoor–Outdoor	**Y38G47T09A** ①
15	—	2 at –5%	EPT	115	FR95	70F	275 (125)	Indoor–Outdoor	**Y38G47T15A** ①
30	2 at +2.5%	4 at –2.5%	EPT	115	FR243	84AB	422 (191)	Indoor–Outdoor	**Y38M47T30A**
45	2 at +2.5%	4 at –2.5%	EPT	115	FR244	84AB	660 (299)	Indoor–Outdoor	**Y38M47T45A**
75	2 at +2.5%	4 at –2.5%	EPT	115	FR245	84AB	1275 (580)	Indoor–Outdoor	**Y38M47T75A** ②

Notes

① T-T (Scott T) connected secondary.

② Floor-mount only.

③ Refer to your Eaton sales office.

Contact your local Eaton sales office for CE Mark transformer requirements. For other ratings or catalog numbers not shown, or for special enclosure types (including stainless steel), refer to Eaton. Frame drawings/dimensions information begins on **Page V2-T2-216**.

Three-Phase Encapsulated—Type EPT, 60 Hz

416 Delta Volts to 208Y/120 Volts

kVA	Full Capacity Taps FCAN	FCBN	Type	°C Temp. Rise	Frame	Wiring Diagram Number	Weight Lbs (kg)	Weathershield	Catalog Number
3	—	2 at –5%	EPT	115	FR201	70V	116 (53)	Indoor–Outdoor	**Y43G28T03A** ①
6	—	2 at –5%	EPT	115	FR200	70V	175 (79)	Indoor–Outdoor	**Y43G28T06A** ①
9	—	2 at –5%	EPT	115	FR103	70V	190 (86)	Indoor–Outdoor	**Y43G28T09A** ①
15	—	2 at –5%	EPT	115	FR95	70V	275 (125)	Indoor–Outdoor	**Y43G28T15A** ①
30	2 at +2.5%	4 at –2.5%	EPT	115	FR243	84I	422 (191)	Indoor–Outdoor	**Y43M28T30A**
45	2 at +2.5%	4 at –2.5%	EPT	115	FR244	84I	660 (299)	Indoor–Outdoor	**Y43M28T45A**
75	2 at +2.5%	4 at –2.5%	EPT	115	FR245	84I	1275 (580)	Indoor–Outdoor	**Y43M28T75A** ②

440 Delta Volts to 220Y/127 Volts

kVA	Full Capacity Taps FCAN	FCBN	Type	°C Temp. Rise	Frame	Wiring Diagram Number	Weight Lbs (kg)	Weathershield	Catalog Number
3	—	2 at –5%	EPT	115	FR201	70G	116 (53)	Indoor–Outdoor	**Y44G31T03A** ①
6	—	2 at –5%	EPT	115	FR200	70G	165 (75)	Indoor–Outdoor	**Y44G31T06A** ①
9	—	2 at –5%	EPT	115	FR103	70G	166 (75)	Indoor–Outdoor	**Y44G31T09A** ①
15	—	2 at –5%	EPT	115	FR95	70G	275 (125)	Indoor–Outdoor	**Y44G31T15A** ①
30	2 at +2.5%	4 at –2.5%	EPT	115	FR243	84O	422 (191)	Indoor–Outdoor	**Y44M31T30A** ②
45	2 at +2.5%	4 at –2.5%	EPT	115	FR244	84O	660 (299)	Indoor–Outdoor	**Y44M31T45A**
75	2 at +2.5%	4 at –2.5%	EPT	115	FR245	84O	1275 (580)	Indoor–Outdoor	**Y44M31T75A** ②

480 Delta Volts to 208Y/120 Volts

kVA	Full Capacity Taps FCAN	FCBN	Type	°C Temp. Rise	Frame	Wiring Diagram Number	Weight Lbs (kg)	Weathershield	Catalog Number
3	—	2 at –5%	EPT	115	FR201	70A	116 (52)	Indoor–Outdoor	**Y48G28T03N** ①
6	—	2 at –5%	EPT	115	FR200	70A	165 (75)	Indoor–Outdoor	**Y48G28T06N** ①
6	2 at +2.5%	2 at –2.5%	EPT	115	FR200	72B	165 (75)	Indoor–Outdoor	**Y48D28T06N** ①
9	—	2 at –5%	EPT	115	FR103	70A	166 (75)	Indoor–Outdoor	**Y48G28T09N** ①
9	—	4 at –2.5%	EPT	115	FR103	503A	185 (84)	Indoor–Outdoor	**Y48J28T09N** ①
9	2 at +2.5%	2 at –2.5%	EPT	115	FR103	72B	185 (84)	Indoor–Outdoor	**Y48D28T09N** ①
15	—	2 at –5%	EPT	115	FR95	70A	275 (125)	Indoor–Outdoor	**Y48G28T15N** ①
15	—	4 at –2.5%	EPT	115	FR95	503A	275 (125)	Indoor–Outdoor	**Y48J28T15N** ①
15	2 at +2.5%	2 at –2.5%	EPT	115	FR95	72B	275 (125)	Indoor–Outdoor	**Y48D28T15N** ①
30	2 at +2.5%	4 at –2.5%	EPT	115	FR243	84A	422 (191)	Indoor–Outdoor	**Y48M28T30N**
45	2 at +2.5%	4 at –2.5%	EPT	115	FR244	84A	720 (327)	Indoor–Outdoor	**Y48M28T45N**
75	2 at +2.5%	4 at –2.5%	EPT	115	FR245	84A	1275 (580)	Indoor–Outdoor	**Y48M28T75N** ②

480 Delta Volts to 208Y/120 Volts—Copper Windings

kVA	Full Capacity Taps FCAN	FCBN	Type	°C Temp. Rise	Frame	Wiring Diagram Number	Weight Lbs (kg)	Weathershield	Catalog Number
15	2 at +2.5%	2 at –2.5%	EPT	115	FR95	72B	300 (136)	Indoor–Outdoor	**Y48D28T15CU** ①
30	2 at +2.5%	4 at –2.5%	EPT	115	FR243	84A	505 (230)	Indoor–Outdoor	**Y48M28T30CU**
45	2 at +2.5%	4 at –2.5%	EPT	115	FR244	84A	810 (368)	Indoor–Outdoor	**Y48M28T45CU**
75	2 at +2.5%	4 at –2.5%	EPT	115	FR245	84A	1450 (659)	Indoor–Outdoor	**Y48M28T75CU** ②③

Notes

① T-T (Scott T) connected secondary.

② Floor-mount only.

③ Not CSA certified.

Contact your local Eaton sales office for CE Mark transformer requirements. For other ratings or catalog numbers not shown, or for special enclosure types (including stainless steel), refer to Eaton. Frame drawings/dimensions information begins on **Page V2-T2-216**.

Three-Phase Encapsulated—Type EPT, 60 Hz

480 Delta Volts to 208Y/120 Volts Stainless Steel ①

kVA	Full Capacity Taps FCAN	FCBN	Type	°C Temp. Rise	Frame	Wiring Diagram Number	Weight Lbs (kg)	Weathershield	Catalog Number
3	—	2 at –5%	EPT	115	FR201	70A	116 (53)	Indoor–Outdoor	**Y48G28T03SS** ②
6	2 at +2.5%	2 at –2.5%	EPT	115	FR200	72B	175 (79)	Indoor–Outdoor	**Y48D28T06SS** ②
9	2 at +2.5%	2 at –2.5%	EPT	115	FR103	72B	185 (84)	Indoor–Outdoor	**Y48D28T09SS** ②
15	2 at +2.5%	2 at –2.5%	EPT	115	FR95	72B	275 (125)	Indoor–Outdoor	**Y48D28T15SS** ②
30	2 at +2.5%	4 at –2.5%	EPT	115	FR243	84A	422 (191)	Indoor–Outdoor	**Y48M28T30SS**
45	2 at +2.5%	4 at –2.5%	EPT	115	FR244	84A	660 (299)	Indoor–Outdoor	**Y48M28T45SS**
75	2 at +2.5%	4 at –2.5%	EPT	115	FR245	84A	1275 (580)	Indoor–Outdoor	**Y48M28T75SS** ③

480 Delta Volts to 208Y/120 Volts Stainless Steel—Copper Windings ①

kVA	Full Capacity Taps FCAN	FCBN	Type	°C Temp. Rise	Frame	Wiring Diagram Number	Weight Lbs (kg)	Weathershield	Catalog Number
15	2 at +2.5%	2 at –2.5%	EPT	115	FR95	72B	275 (125)	Indoor–Outdoor	**Y48D28T15CUSS** ②
30	2 at +2.5%	4 at –2.5%	EPT	115	FR243	84A	504 (229)	Indoor–Outdoor	**Y48M28T30CUSS**
45	2 at +2.5%	4 at –2.5%	EPT	115	FR244	84A	810 (368)	Indoor–Outdoor	**Y48M28T45CUSS**

480 Delta Volts to 220Y/127 Volts

kVA	Full Capacity Taps FCAN	FCBN	Type	°C Temp. Rise	Frame	Wiring Diagram Number	Weight Lbs (kg)	Weathershield	Catalog Number
3	—	2 at –5%	EPT	115	FR201	70K	116 (53)	Indoor–Outdoor	**Y48G31T03A** ②
6	—	2 at –5%	EPT	115	FR200	70K	175 (79)	Indoor–Outdoor	**Y48G31T06A** ②
9	—	2 at –5%	EPT	115	FR103	70A	185 (84)	Indoor–Outdoor	**Y48G31T09A** ②
15	—	2 at –5%	EPT	115	FR95	70A	275 (125)	Indoor–Outdoor	**Y48G31T15A** ②
30	2 at +2.5%	4 at –2.5%	EPT	115	FR243	84A	422 (191)	Indoor–Outdoor	**Y48M31T30A**
45	2 at +2.5%	4 at –2.5%	EPT	115	FR244	84A	660 (299)	Indoor–Outdoor	**Y48M31T45A**
75	2 at +2.5%	4 at –2.5%	EPT	115	FR245	84K	1275 (580)	Indoor–Outdoor	**Y48M31T75A** ③

480 Delta Volts to 240 Delta Volts

kVA	Full Capacity Taps FCAN	FCBN	Type	°C Temp. Rise	Frame	Wiring Diagram Number	Weight Lbs (kg)	Weathershield	Catalog Number
3	—	2 at –5%	EPT	115	FR201	74A	116 (52)	Indoor–Outdoor	**Y48G24T03N** ②④
6	—	2 at –5%	EPT	115	FR200	74A	165 (75)	Indoor–Outdoor	**Y48G24T06N** ②④
9	—	4 at –2.5%	EPT	115	FR103	73A	185 (84)	Indoor–Outdoor	**Y48J24T09N** ②④
15	—	4 at –2.5%	EPT	115	FR95	73A	275 (125)	Indoor–Outdoor	**Y48J24T15N** ②④
30	2 at +2.5%	4 at –2.5%	EPT	115	FR243	85A	422 (191)	Indoor–Outdoor	**Y48M24T30N** ④
45	2 at +2.5%	4 at –2.5%	EPT	115	FR244	85A	660 (299)	Indoor–Outdoor	**Y48M24T45N** ④

Notes

① NEMA 3R, 304 stainless steel enclosure; 316 stainless steel enclosure available.
② T-T connected secondary.
③ Floor-mount only.
④ Do not include 120 volt lighting tap.

Contact your local Eaton sales office for CE Mark transformer requirements. For other ratings or catalog numbers not shown, or for special enclosure types (including stainless steel), refer to Eaton. Frame drawings/dimensions information begins on **Page V2-T2-216**.

Three-Phase Encapsulated—Type EPT, 60 Hz

480 Delta Volts to 380Y/220 Volts

kVA	Full Capacity Taps FCAN	FCBN	Type	°C Temp. Rise	Frame	Wiring Diagram Number	Weight Lbs (kg)	Weathershield	Catalog Number
3	—	2 at –5%	EPT	115	FR201	70A	116 (53)	Indoor–Outdoor	**Y48G37T03A** ①
6	—	2 at –5%	EPT	115	FR200	70R	165 (75)	Indoor–Outdoor	**Y48G37T06A** ①
9	—	2 at –5%	EPT	115	FR103	70R	185 (84)	Indoor–Outdoor	**Y48G37T09A** ①
15	—	2 at –5%	EPT	115	FR95	70R	275 (125)	Indoor–Outdoor	**Y48G37T15A** ①
30	2 at +2.5%	4 at –2.5%	EPT	115	FR243	84A	422 (191)	Indoor–Outdoor	**Y48M37T30A**
45	2 at +2.5%	4 at –2.5%	EPT	115	FR244	84A	660 (299)	Indoor–Outdoor	**Y48M37T45A**
75	2 at +2.5%	4 at –2.5%	EPT	115	FR245	84A	1275 (580)	Indoor–Outdoor	**Y48M37T75A** ②

480 Delta Volts to 380 Delta Volts

kVA	Full Capacity Taps FCAN	FCBN	Type	°C Temp. Rise	Frame	Wiring Diagram Number	Weight Lbs (kg)	Weathershield	Catalog Number
3	—	2 at –5%	EPT	115	FR201	74B	116 (53)	Indoor–Outdoor	**Y48G38T03A** ①
6	—	2 at –5%	EPT	115	FR200	74B	165 (75)	Indoor–Outdoor	**Y48G38T06A** ①
9	—	2 at –5%	EPT	115	FR103	74B	185 (84)	Indoor–Outdoor	**Y48G38T09A** ①
15	—	2 at –5%	EPT	115	FR95	74A	275 (125)	Indoor–Outdoor	**Y48G38T15A** ①
30	2 at +2.5%	4 at –2.5%	EPT	115	FR243	85A	422 (191)	Indoor–Outdoor	**Y48M38T30A**
45	2 at +2.5%	4 at –2.5%	EPT	115	FR244	85A	660 (299)	Indoor–Outdoor	**Y48M38T45A**
75	2 at +2.5%	4 at –2.5%	EPT	115	FR245	85A	1275 (580)	Indoor–Outdoor	**Y48M38T75A** ②

480 Delta Volts to 416Y/240 Volts

kVA	Full Capacity Taps FCAN	FCBN	Type	°C Temp. Rise	Frame	Wiring Diagram Number	Weight Lbs (kg)	Weathershield	Catalog Number
3	—	2 at –5%	EPT	115	FR200	70A	165 (75)	Indoor–Outdoor	**Y48G51T03A** ①
6	—	2 at –5%	EPT	115	FR200	70A	185 (84)	Indoor–Outdoor	**Y48G51T06A** ①
9	—	2 at –5%	EPT	115	FR103	70S	185 (84)	Indoor–Outdoor	**Y48G51T09A** ①
15	—	2 at –5%	EPT	115	FR95	70S	275 (125)	Indoor–Outdoor	**Y48G51T15A** ①
30	2 at +2.5%	4 at –2.5%	EPT	115	FR243	84A	422 (191)	Indoor–Outdoor	**Y48M51T30A**
45	2 at +2.5%	4 at –2.5%	EPT	115	FR244	84A	660 (299)	Indoor–Outdoor	**Y48M51T45A**
75	2 at +2.5%	4 at –2.5%	EPT	115	FR245	84A	1275 (580)	Indoor–Outdoor	**Y48M51T75A** ②

480 Delta Volts to 440Y/254 Volts

kVA	Full Capacity Taps FCAN	FCBN	Type	°C Temp. Rise	Frame	Wiring Diagram Number	Weight Lbs (kg)	Weathershield	Catalog Number
3	—	2 at –5%	EPT	115	FR201	70A	116 (53)	Indoor–Outdoor	**Y48G35T03A** ①
6	—	2 at –5%	EPT	115	FR200	70A	185 (84)	Indoor–Outdoor	**Y48G35T06A** ①
9	—	2 at –5%	EPT	115	FR103	70A	185 (84)	Indoor–Outdoor	**Y48G35T09A** ①
15	—	2 at –5%	EPT	115	FR95	70A	275 (125)	Indoor–Outdoor	**Y48G35T15A** ①
30	2 at +2.5%	4 at –2.5%	EPT	115	FR243	84A	422 (191)	Indoor–Outdoor	**Y48M35T30A**
45	2 at +2.5%	4 at –2.5%	EPT	115	FR244	84A	660 (299)	Indoor–Outdoor	**Y48M35T45A**
75	2 at +2.5%	4 at –2.5%	EPT	115	FR245	84A	1275 (580)	Indoor–Outdoor	**Y48M35T75A** ②

Notes

① T-T connected secondary.

② Floor-mount only.

Contact your local Eaton sales office for CE Mark transformer requirements. For other ratings or catalog numbers not shown, or for special enclosure types (including stainless steel), refer to Eaton. Frame drawings/dimensions information begins on **Page V2-T2-216**.

Three-Phase Encapsulated—Type EPT, 60 Hz

480 Delta Volts to 480Y/277 Volts

kVA	Full Capacity Taps FCAN	FCBN	Type	°C Temp. Rise	Frame	Wiring Diagram Number	Weight Lbs (kg)	Weathershield	Catalog Number
9	2 at +2.5%	2 at –2.5%	EPT	115	FR103	72C	190 (86)	Indoor–Outdoor	**Y48D47T09N** ①
15	2 at +2.5%	2 at –2.5%	EPT	115	FR95	72C	275 (125)	Indoor–Outdoor	**Y48D47T15N** ①
30	2 at +2.5%	4 at –2.5%	EPT	115	FR243	84A	422 (191)	Indoor–Outdoor	**Y48M47T30N**
45	2 at +2.5%	4 at –2.5%	EPT	115	FR244	84A	660 (299)	Indoor–Outdoor	**Y48M47T45N**

600 Delta Volts to 208Y/120 Volts

kVA	Full Capacity Taps FCAN	FCBN	Type	°C Temp. Rise	Frame	Wiring Diagram Number	Weight Lbs (kg)	Weathershield	Catalog Number
9	—	2 at –5%	EPT	115	FR103	70B	185 (84)	Indoor–Outdoor	**Y60G28T09N** ①
15	—	2 at –5%	EPT	115	FR95	70B	275 (125)	Indoor–Outdoor	**Y60G28T15N** ①
30	2 at +2.5%	4 at –2.5%	EPT	115	FR243	84B	422 (191)	Indoor–Outdoor	**Y60M28T30N**
45	2 at +2.5%	4 at –2.5%	EPT	115	FR244	84B	660 (299)	Indoor–Outdoor	**Y60M28T45N**

Three-Phase Shielded—Type EPT, 60 Hz

480 Delta Volts to 208Y/120 Volts

kVA	Full Capacity Taps FCAN	FCBN	Type	°C Temp. Rise	Frame	Wiring Diagram Number	Weight Lbs (kg)	Weathershield	Catalog Number
3	2 at +2.5%	2 at –2.5%	EPT	115	FR201	86B	116 (52)	Indoor–Outdoor	**Y48D28E03A** ①
6	2 at +2.5%	2 at –2.5%	EPT	115	FR200	86B	165 (75)	Indoor–Outdoor	**Y48D28E06A** ①
9	2 at +2.5%	2 at –2.5%	EPT	115	FR103	86B	190 (86)	Indoor–Outdoor	**Y48D28E09N** ①
15	2 at +2.5%	2 at –2.5%	EPT	115	FR95	86B	275 (125)	Indoor–Outdoor	**Y48D28E15B** ①

480 Delta Volts to 240 Delta Volts

kVA	Full Capacity Taps FCAN	FCBN	Type	°C Temp. Rise	Frame	Wiring Diagram Number	Weight Lbs (kg)	Weathershield	Catalog Number
3	—	2 at –5%	EPT	115	FR201	88A	116 (52)	Indoor–Outdoor	**Y48G24E03A** ①
6	—	2 at –5%	EPT	115	FR200	88A	165 (75)	Indoor–Outdoor	**Y48G24E06A** ①
9	—	4 at –2.5%	EPT	115	FR103	505B	195 (89)	Indoor–Outdoor	**Y48J24E09A** ①
15	—	4 at –2.5%	EPT	115	FR95	505B	275 (125)	Indoor–Outdoor	**Y48J24E15A** ①

Notes

① T-T connected secondary.

Contact your local Eaton sales office for CE Mark transformer requirements. For other ratings or catalog numbers not shown, or for special enclosure types (including stainless steel), refer to Eaton. Frame drawings/dimensions information begins on **Page V2-T2-216**.

NEMA Type 4X Single-Phase Encapsulated—Type EP, 60 Hz, Grade 304 Stainless Steel ①

240 x 480 Volts to 120/240 Volts—Aluminum Windings

kVA	Full Capacity Taps FCAN	FCBN	Type	°C Temp. Rise	Frame	Wiring Diagram Number	Weight Lbs (kg)	Weathershield	Catalog Number
0.100 ②	—	—	EP	115	FR544X	3A	7 (3)	Indoor–Outdoor	**S20N11S82SS4X**
0.015 ②	—	—	EP	115	FR554X	3A	9 (4)	Indoor–Outdoor	**S20N11S83SS4X**
0.250 ②	—	—	EP	115	FR57P4X	3A	15 (7)	Indoor–Outdoor	**S20N11P26SS4X**
0.500 ②	—	—	EP	115	FR57P4X	3A	14 (6)	Indoor–Outdoor	**S20N11P51SS4X**
0.750 ②	—	—	EP	115	FR58AP4X	3A	22 (10)	Indoor–Outdoor	**S20N11P76SS4X**
1 ②	—	—	EP	115	FR67P4X	3A	30 (14)	Indoor–Outdoor	**S20N11P01SS4X**
1.5 ②	—	—	EP	115	FR67P4X	3A	41 (19)	Indoor–Outdoor	**S20N11P16SS4X**
2 ②	—	—	EP	115	FR68P4X	3A	75 (34)	Indoor–Outdoor	**S20N11P02SS4X**
3	—	—	EP	115	FR1764X	3A	68 (31)	Indoor–Outdoor	**S20N11S03SS4X**
3	③	③	EP	115	FR1764X	9A	67 (30)	Indoor–Outdoor	**S20K11S03SS4X**
5	—	—	EP	115	FR1774X	3A	107 (49)	Indoor–Outdoor	**S20N11S05SS4X**
5	③	③	EP	115	FR1774X	9A	105 (48)	Indoor–Outdoor	**S20K11S05SS4X**
7.5	—	—	EP	115	FR1784X	3A	129 (58)	Indoor–Outdoor	**S20N11S07SS4X**
7.5	③	③	EP	115	FR1784X	9A	130 (59)	Indoor–Outdoor	**S20K11S07SS4X**
10	—	—	EP	115	FR1794X	3A	196 (89)	Indoor–Outdoor	**S20N11S10SS4X**
10	③	③	EP	115	FR1794X	9A	198 (90)	Indoor–Outdoor	**S20K11S10SS4X**
15	—	—	EP	115	FR1804X	3A	215 (98)	Indoor–Outdoor	**S20N11S15SS4X**
15	③	③	EP	115	FR1804X	23A	215 (98)	Indoor–Outdoor	**S20L11S15SS4X**
25	—	—	EP	115	FR1824X	3A	393 (178)	Indoor–Outdoor	**S20N11S25SS4X**
25	④	④	EP	115	FR1824X	23A	453 (206)	Indoor–Outdoor	**S20L11S25SS4X**
37.5	④	④	EP	115	FR300A4X	248A	735 (334)	Indoor–Outdoor	**S20L11S37SS4X** ⑤

Notes

① Grade 304 stainless steel standard. Grade 316 stainless steel available as an option. Replace suffix "SS" with suffix "S6."
② Copper windings provided as standard.
③ 1 at +10% FCBN at 240 volts; 2 at –5% FCBN at 480 volts.
④ 2 at +5% FCBN at 240 volts; 4 at –2.5% FCBN at 480 volts.
⑤ Floor-mount only.

Contact your local Eaton sales office for voltage combinations not shown in the above table. Other voltages and custom features are available upon request.

NEMA Type 4X Single-Phase Encapsulated—Type EP, 60 Hz, Grade 304 Stainless Steel ①

240 x 480 Volts to 120/240 Volts—Copper Windings

kVA	Full Capacity Taps FCAN	FCBN	Type	°C Temp. Rise	Frame	Wiring Diagram Number	Weight Lbs (kg)	Weathershield	Catalog Number
0.100 ②	—	—	EP	115	FR544X	3A	7 (3)	Indoor–Outdoor	**S20N11S82SS4X**
0.015 ②	—	—	EP	115	FR554X	3A	9 (4)	Indoor–Outdoor	**S20N11S83SS4X**
0.250 ②	—	—	EP	115	FR57P4X	3A	15 (7)	Indoor–Outdoor	**S20N11P26SS4X**
0.500 ②	—	—	EP	115	FR57P4X	3A	14 (6)	Indoor–Outdoor	**S20N11P51SS4X**
0.750 ②	—	—	EP	115	FR58AP4X	3A	22 (10)	Indoor–Outdoor	**S20N11P76SS4X**
1 ②	—	—	EP	115	FR67P4X	3A	30 (14)	Indoor–Outdoor	**S20N11P01SS4X**
1.5 ②	—	—	EP	115	FR68P4X	3A	41 (19)	Indoor–Outdoor	**S20N11P02SS4X**
2 ②	—	—	EP	115	FR68P4X	3A	36 (16)	Indoor–Outdoor	**S20N11P16SS4X**
3	—	—	EP	115	FR1764X	3A	76 (34)	Indoor–Outdoor	**S20N11S03CUSS4X**
3	③	③	EP	115	FR1764X	9A	77 (35)	Indoor–Outdoor	**S20K11S03CUSS4X**
5	—	—	EP	115	FR1774X	3A	135 (61)	Indoor–Outdoor	**S20N11S05CUSS4X**
5	③	③	EP	115	FR1774X	9A	121 (55)	Indoor–Outdoor	**S20K11S05CUSS4X**
7.5	—	—	EP	115	FR1784X	3A	144 (65)	Indoor–Outdoor	**S20N11S07CUSS4X**
7.5	③	③	EP	115	FR1784X	9A	146 (66)	Indoor–Outdoor	**S20K11S07CUSS4X**
10	—	—	EP	115	FR1794X	3A	229 (104)	Indoor–Outdoor	**S20N11S10CUSS4X**
10	③	③	EP	115	FR1794X	9A	219 (99)	Indoor–Outdoor	**S20K11S10CUSS4X**
15	—	—	EP	115	FR1804X	3A	236 (107)	Indoor–Outdoor	**S20N11S15CUSS4X**
15	③	③	EP	115	FR1804X	23A	236 (107)	Indoor–Outdoor	**S20L11S15CUSS4X**
25	—	—	EP	115	FR300A4X	3A	388 (176)	Indoor–Outdoor	**S20N11S25CUSS4X**
25	④	④	EP	115	FR300A4X	23A	388 (176)	Indoor–Outdoor	**S20L11S25CUSS4X**
37.5	④	④	EP	115	FR300A4X	248A	775 (352)	Indoor–Outdoor	**S20L11S37CUSS4X** ⑤

Notes

① Grade 304 stainless steel standard. Grade 316 stainless steel available as an option. Replace suffix "SS" with suffix "S6."
② Copper windings provided as standard.
③ 1 at +10% FCBN at 240 volts; 2 at –5% FCBN at 480 volts.
④ 2 at +5% FCBN at 240 volts; 4 at –2.5% FCBN at 480 volts.
⑤ Floor-mount only.

Contact your local Eaton sales office for voltage combinations not shown in the above table. Other voltages and custom features are available upon request.

NEMA Type 4X Three-Phase Encapsulated—Type EPT, 60 Hz, Grade 304 Stainless Steel ①

480 Delta Volts to 208Y/120 Volts—Aluminum Windings

kVA	Full Capacity Taps FCAN	FCBN	Type	°C Temp. Rise	Frame	Wiring Diagram Number	Weight Lbs (kg)	Weathershield	Catalog Number
3	—	2 at –5%	EPT	115	FR2014X	70A	125 (57)	Indoor–Outdoor	**Y48G28T03SS4X** ②
6	—	2 at –5%	EPT	115	FR2004X	70A	165 (75)	Indoor–Outdoor	**Y48G28T06SS4X** ②
6	2 at +2.5%	2 at –2.5%	EPT	115	FR2004X	72B	171 (78)	Indoor–Outdoor	**Y48D28T06SS4X** ②
9	—	2 at –5%	EPT	115	FR1034X	70A	180 (82)	Indoor–Outdoor	**Y48G28T09SS4X** ②
9	—	4 at –2.5%	EPT	115	FR1034X	503A	192 (87)	Indoor–Outdoor	**Y48J28T09SS4X** ②
9	2 at +2.5%	2 at –2.5%	EPT	115	FR1034X	72B	196 (89)	Indoor–Outdoor	**Y48D28T09SS4X** ②
15	2 at +2.5%	2 at –2.5%	EPT	115	FR954X	72B	281 (127)	Indoor–Outdoor	**Y48D28T15SS4X** ②
15	—	2 at –5%	EPT	115	FR954X	70A	269 (122)	Indoor–Outdoor	**Y48G28T15SS4X** ②
15	—	4 at –2.5%	EPT	115	FR954X	503A	268 (121)	Indoor–Outdoor	**Y48J28T15SS4X** ②
30	2 at +2.5%	4 at –2.5%	EPT	115	FR2434X	84A	539 (245)	Indoor–Outdoor	**Y48M28T30SS4X**
45	2 at +2.5%	4 at –2.5%	EPT	115	FR2444X	84A	723 (328)	Indoor–Outdoor	**Y48M28T45SS4X**
75	2 at +2.5%	4 at –2.5%	EPT	115	FR2454X	84A	1277 (580)	Indoor–Outdoor	**Y48M28T75SS4X** ③

480 Delta Volts to 208Y/120 Volts—Copper Windings

kVA	Full Capacity Taps FCAN	FCBN	Type	°C Temp. Rise	Frame	Wiring Diagram Number	Weight Lbs (kg)	Weathershield	Catalog Number
3	—	2 at –5%	EPT	115	FR2014X	70A	139 (63)	Indoor–Outdoor	**Y48G28T03CUSS4X** ②
6	—	2 at –5%	EPT	115	FR2004X	70A	187 (84)	Indoor–Outdoor	**Y48G28T06CUSS4X** ②
6	2 at +2.5%	2 at –2.5%	EPT	115	FR2004X	72B	188 (85)	Indoor–Outdoor	**Y48D28T06CUSS4X** ②
9	—	2 at –5%	EPT	115	FR1034X	70A	226 (103)	Indoor–Outdoor	**Y48G28T09CUSS4X** ②
9	—	4 at –2.5%	EPT	115	FR1034X	503A	226 (103)	Indoor–Outdoor	**Y48J28T09CUSS4X** ②
9	2 at +2.5%	2 at –2.5%	EPT	115	FR1034X	72B	231 (105)	Indoor–Outdoor	**Y48D28T09CUSS4X** ②
15	2 at +2.5%	2 at –2.5%	EPT	115	FR954X	72B	276 (125)	Indoor–Outdoor	**Y48D28T15CUSS4X** ②
15	—	2 at –5%	EPT	115	FR954X	70A	283 (128)	Indoor–Outdoor	**Y48G28T15CUSS4X** ②
15	—	4 at –2.5%	EPT	115	FR954X	503A	299 (136)	Indoor–Outdoor	**Y48J28T15CUSS4X** ②
30	2 at +2.5%	4 at –2.5%	EPT	115	FR2434X	84A	602 (273)	Indoor–Outdoor	**Y48M28T30CUSS4X**
45	2 at +2.5%	4 at –2.5%	EPT	115	FR2444X	84A	829 (376)	Indoor–Outdoor	**Y48M28T45CUSS4X**
75	2 at +2.5%	4 at –2.5%	EPT	115	FR2454X	84A	1452 (659)	Indoor–Outdoor	**Y48M28T75CUSS4X** ③

Notes

① Grade 304 stainless steel standard. Grade 316 stainless steel available as an option. Replace suffix "SS" with suffix "S6."

② T-T connected (Scott T) secondary winding configuration.

③ Floor-mount only.

Contact your local Eaton sales office for voltage combinations not shown in the above table. Other voltages and custom features are available upon request.

Accessories

Please refer to Section 2.7 **Page V2-T2-191**.

Technical Data and Specifications

Frequency

Eaton standard dry-type distribution transformers are designed for 60 Hz operation. Transformers required for other frequencies are available and must be specifically designed.

Overload Capability

Short-term overload is designed into transformers as required by ANSI. Dry-type distribution transformers will deliver 200% nameplate load for one-half hour, 150% load for one hour and 125% load for four hours without being damaged, provided that a constant 50% load precedes and follows the overload. See ANSI C57.96-01.250 for additional limitations.

Continuous overload capacity is not deliberately designed into a transformer because the design objective is to be within the allowed winding temperature rise with nameplate loading.

Insulation System and Temperature Rise

Industry standards classify insulation systems and rise as shown below:

Insulation System Classification

Ambient	+ Winding Rise	+ Hot Spot	= Temp. Class
40°C	55°C	10°C	105°C
40°C	80°C	30°C	150°C
25°C	135°C	20°C	180°C
40°C	115°C	30°C	185°C
40°C	150°C	30°C	220°C

The design life of transformers having different insulation systems is the same—the lower-temperature systems are designed for the same life as the higher-temperature systems.

Enclosures

Eaton encapsulated transformers, Types EP and EPT, use a NEMA 3R rated enclosure as standard. NEMA 4X enclosures (grade 304 or 316 stainless steel) are available as an option.

Winding Terminations

Primary and secondary windings are terminated in the wiring compartment. Encapsulated units have copper leads or stabs brought out for connections. Ventilated transformers have leads brought out to aluminum pads that are pre-drilled to accept Cu/Al lugs. **Lugs are not supplied with these transformers.** Eaton recommends that external cables be rated 90°C (sized at 75°C ampacity) for encapsulated designs and 75°C for ventilated designs.

Series-Multiple Windings

Series-multiple windings consist of two similar coils in each winding that can be connected in series or parallel (multiple). Transformers with series-multiple windings are designated with an "x" or "/" between the voltage ratings, such as voltages of "120/240" or "240 x 480." If the series-multiple winding is designated by an "x," the winding can be connected only for a series or parallel. With the "/" designation, a mid-point also becomes available in addition to the series or parallel connection. As an example, a 120 x 240 winding can be connected for either 120 (parallel) or 240 (series), but a 120/240 winding can be connected for 120 (parallel), 240 (series) or 240 with a 120 mid-point.

Sound Levels

All Eaton 600 volt class general-purpose dry-type distribution transformers are designed to meet NEMA ST-20 sound levels listed here. These are the sound levels measured in a soundproof environment. Actual sound levels measured at an installation will likely be higher due to electrical connections and environmental conditions. Lower sound levels are available and should be specified when the transformer is going to be installed in an area where sound may be a concern.

For additional information, please refer to Section 2.7 **Page V2-T2-195**.

Average Sound Levels

NEMA ST-20 Average Sound Level, dB

Equivalent Winding kVA Range	Self-Cooled Ventilated (up to 1.2 kV) K-Factor 1, 4, 9	Self-Cooled Ventilated (up to 1.2 kV) K-Factor 13, 20	Encapsulated (up to 1.2 kV)
3.00 and below	40	40	45
3.01 to 9.00	40	40	45
9.01 to 15.00	45	45	50
15.01 to 30.00	45	45	50
30.01 to 50.00	45	48	50
50.01 to 75.00	50	53	55
75.01 to 112.50	50	53	55
112.51 to 150.00	50	53	55
150.01 to 225.00	55	58	57
225.01 to 300.00	55	58	57
300.01 to 500.00	60	63	59
500.01 to 700.00	62	65	61
700.01 to 1000.00	64	67	63
Greater than 1000	Consult factory	Consult factory	Consult factory

Note

For other ratings or catalog numbers not shown, or for special enclosure types (including stainless steel), refer to Eaton.

Contents

Description	*Page*
Distribution Transformers	
Motor Drive Isolation Transformers	**V2-T2-111**
Mini–Power Centers	**V2-T2-119**
Totally Enclosed Non-Ventilated Transformers	**V2-T2-124**
Class I, Division 2, Hazardous Location Transformers	**V2-T2-127**
Open-Type Core and Coil Assembly Transformers	**V2-T2-130**
Marine Duty Transformers	**V2-T2-133**
Buck-Boost and Low Voltage Lighting Transformers	**V2-T2-144**
Medium Voltage Distribution Transformers	**V2-T2-173**

Type MD

Contents

Description	*Page*
Motor Drive Isolation Transformers	
Catalog Number Selection	**V2-T2-112**
Product Selection	**V2-T2-112**
Accessories	**V2-T2-118**
Technical Data and Specifications	**V2-T2-118**
Mini–Power Centers	**V2-T2-119**
Totally Enclosed Non-Ventilated Transformers	**V2-T2-124**
Class I, Division 2, Hazardous Location Transformers	**V2-T2-127**
Open-Type Core and Coil Assembly Transformers	**V2-T2-130**
Marine Duty Transformers	**V2-T2-133**
Buck-Boost and Low Voltage Lighting Transformers	**V2-T2-144**
Medium Voltage Distribution Transformers	**V2-T2-173**

Motor Drive Isolation Transformers

Product Description

Note: The following pages provide listings for most standard transformer ratings and catalog numbers. For other ratings or catalog numbers not shown, or for special enclosure types (including stainless steel), refer to Eaton.

- Suitable for indoor or outdoor applications (with weathershield)
- Ventilated enclosures
- 220°C insulation system
- 150°C rise standard (self extinguishing), 115°C or 80°C rise optional
- Available in ratings from 7.5 through 1500 kVA

Application Description

Drive isolation transformers are specifically designed for use with AC and DC adjustable speed drives. Two winding drive isolation transformers provide:

- Electrical isolation between the incoming line and the drive circuitry
- Voltage conversion of input line to standard drive input voltages
- Minimized line disturbances caused by SCR (silicon controlled rectifiers) firing
- Reduced short-circuit currents and voltage line transients

Drive isolation transformers are specifically sized to the drive kVA requirements and are braced to withstand the mechanical stresses of current reversals and short circuits associated with SCR drives.

Features, Benefits and Functions

- 60 Hz operation (50/60 Hz operation available)
- Short-term overload capability as required by ANSI
- Primary and secondary terminals are front accessible for fast and easy connection
- Slotted screw mounting holes in enclosure and cover reduce installation time
- Sound dampening pads, which isolate the core and coil from the case, reduce noise levels to meet NEMA ST-20
- Core laminations of precision sheared silicon steel are hand stacked to ensure quiet operation
- Terminations are clearly marked for easy identification
- Three-phase transformers have one 5% full capacity tap above and below nominal voltage for incoming source adjustment
- Units are suitable for continuous operation in a 40°C ambient maximum
- Full current neutral
- Thermoguard protection embedded in coils of three-phase models to indicate that high temperatures (approximately 190°C) are present. Thermoguards consist of a set of NO dry contacts
- Three coil delta-wye configurations are used throughout the product line

Standards and Certifications

- ANSI C89.2
- NEMA ST-20
- UL 506
- UL 1561

Listed

Seismic Qualified

All Eaton manufactured dry-type distribution transformers are seismically qualified and exceed requirements of the International Building Code (IBC) and California Code Title 24.

Catalog Number Selection

Please refer to Section 2.7 **Page V2-T2-187**.

Product Selection

Additional Product Selection information begins on **Page V2-T2-189**.

Three-Phase Drive Isolation

208 Delta Volts to 460Y/266 Volts

hp	kVA	Full Capacity Taps FCAN	FCBN	°C Temp. Rise	Frame	Wiring Diagram Number	Weight Lbs (kg)	Weathershield	Catalog Number
5	7.5	1 at +5%	1 at –5%	150	912D	347B	158 (72)	**WS38**	**MD075E86**
7.5	11	1 at +5%	1 at –5%	150	912D	347B	176 (80)	**WS38**	**MD11E86**
10	14	1 at +5%	1 at –5%	150	912D	347B	149 (68)	**WS38**	**MD14E86**
15	20	1 at +5%	1 at –5%	150	912D	347B	240 (19)	**WS38**	**MD20E86**
20	27	1 at +5%	1 at –5%	150	912D	347B	231 (15)	**WS38**	**MD27E86**
25	34	1 at +5%	1 at –5%	150	912D	347B	310 (141)	**WS38**	**MD34E86**
30	40	1 at +5%	1 at –5%	150	912D	347B	307 (139)	**WS38**	**MD40E86**
40	51	1 at +5%	1 at –5%	150	914F	347B	480 (218)	**WS39**	**MD51E86**
50	63	1 at +5%	1 at –5%	150	914F	347B	485 (220)	**WS39**	**MD63E86**
60	75	1 at +5%	1 at –5%	150	914F	347B	482 (219)	**WS39**	**MD75E86**
75	93	1 at +5%	1 at –5%	150	915F	347B	600 (272)	**WS39**	**MD93E86**
100	118	1 at +5%	1 at –5%	150	916A	347B	658 (299)	**WS19**	**MD118E86**
125	145	1 at +5%	1 at –5%	150	916A	347B	770 (350)	**WS19**	**MD145E86**
150	175	1 at +5%	1 at –5%	150	918A	321B	1320 (599)	**WS34**	**MD175E86**
200	220	1 at +5%	1 at –5%	150	918A	321B	1436 (652)	**WS34**	**MD220E86**
250	275	1 at +5%	1 at –5%	150	918A	321B	①	**WS34**	**MD275E86**
300	330	1 at +5%	1 at –5%	150	919E	321B	①	**WS35**	**MD330E86**
400	440	1 at +5%	1 at –5%	150	920E	321B	①	**WS35**	**MD440E86**

Notes

① Contact Eaton.

For other ratings or catalog numbers not shown, or for special enclosure types (including stainless steel), refer to Eaton. Frame drawings/dimensions information begins on **Page V2-T2-216**.

Three-Phase Drive Isolation

230 Delta Volts to 230Y/133 Volts

hp	kVA	Full Capacity Taps FCAN	FCBN	°C Temp. Rise	Frame	Wiring Diagram Number	Weight Lbs (kg)	Weathershield	Catalog Number
5	7.5	1 at +5%	1 at –5%	150	912D	286A	158 (72)	**WS38**	**MD075E88**
7.5	11	1 at +5%	1 at –5%	150	912D	286A	156 (71)	**WS38**	**MD11E88**
10	14	1 at +5%	1 at –5%	150	912D	286A	158 (72)	**WS38**	**MD14E88**
15	20	1 at +5%	1 at –5%	150	912D	286A	216 (98)	**WS38**	**MD20E88**
20	27	1 at +5%	1 at –5%	150	912D	286A	231 (105)	**WS38**	**MD27E88**
25	34	1 at +5%	1 at –5%	150	912D	286A	310 (141)	**WS38**	**MD34E88**
30	40	1 at +5%	1 at –5%	150	912D	286A	310 (141)	**WS38**	**MD40E88**
40	51	1 at +5%	1 at –5%	150	914F	286A	480 (218)	**WS39**	**MD51E88**
50	63	1 at +5%	1 at –5%	150	914F	286A	500 (227)	**WS39**	**MD63E88**
60	75	1 at +5%	1 at –5%	150	914F	286A	538 (244)	**WS39**	**MD75E88**
75	93	1 at +5%	1 at –5%	150	915F	286A	600 (272)	**WS39**	**MD93E88**
100	118	1 at +5%	1 at –5%	150	915F	286A	600 (272)	**WS39**	**MD118E88**
125	145	1 at +5%	1 at –5%	150	916A	286A	868 (394)	**WS19**	**MD145E88**
150	175	1 at +5%	1 at –5%	150	918A	318D	1320 (599)	**WS34**	**MD175E88**
200	220	1 at +5%	1 at –5%	150	918A	318D	1332 (605)	**WS34**	**MD220E88**
250	275	1 at +5%	1 at –5%	150	918A	318D	1350 (613)	**WS34**	**MD275E88**
300	330	1 at +5%	1 at –5%	150	919E	318D	2336 (1061)	**WS35**	**MD330E88**
400	440	1 at +5%	1 at –5%	150	920E	318D	①	**WS35**	**MD440E88**

230 Delta Volts to 460Y/266 Volts

hp	kVA	Full Capacity Taps FCAN	FCBN	°C Temp. Rise	Frame	Wiring Diagram Number	Weight Lbs (kg)	Weathershield	Catalog Number
5	7.5	1 at +5%	1 at –5%	150	912D	347A	158 (72)	**WS38**	**MD075E89**
7.5	11	1 at +5%	1 at –5%	150	912D	347A	158 (72)	**WS38**	**MD11E89**
10	14	1 at +5%	1 at –5%	150	912D	347A	158 (72)	**WS38**	**MD14E89**
15	20	1 at +5%	1 at –5%	150	912D	347A	254 (115)	**WS38**	**MD20E89**
20	27	1 at +5%	1 at –5%	150	912D	347A	231 (105)	**WS38**	**MD27E89**
25	34	1 at +5%	1 at –5%	150	912D	347A	310 (141)	**WS38**	**MD34E89**
30	40	1 at +5%	1 at –5%	150	912D	347A	344 (156)	**WS38**	**MD40E89**
40	51	1 at +5%	1 at –5%	150	914F	347A	480 (218)	**WS39**	**MD51E89**
50	63	1 at +5%	1 at –5%	150	914F	347A	457 (207)	**WS39**	**MD63E89**
60	75	1 at +5%	1 at –5%	150	914F	347A	480 (218)	**WS39**	**MD75E89**
75	93	1 at +5%	1 at –5%	150	915F	347A	600 (272)	**WS39**	**MD93E89**
100	118	1 at +5%	1 at –5%	150	916A	347A	941 (427)	**WS19**	**MD118E89**
125	145	1 at +5%	1 at –5%	150	916A	347A	770 (350)	**WS19**	**MD145E89**
150	175	1 at +5%	1 at –5%	150	917	321A	1326 (602)	**WS34**	**MD175E89**
200	220	1 at +5%	1 at –5%	150	918A	321A	1332 (605)	**WS34**	**MD220E89**
250	275	1 at +5%	1 at –5%	150	918A	321A	1350 (613)	**WS34**	**MD275E89**
300	330	1 at +5%	1 at –5%	150	919E	321A	2400 (1090)	**WS35**	**MD330E89**
400	440	1 at +5%	1 at –5%	150	920E	321A	①	**WS35**	**MD440E89**

Notes

① Contact Eaton.

For other ratings or catalog numbers not shown, or for special enclosure types (including stainless steel), refer to Eaton. Frame drawings/dimensions information begins on **Page V2-T2-216**.

Three-Phase Drive Isolation

460 Delta Volts to 230Y/133 Volts

hp	kVA	Full Capacity Taps FCAN	FCBN	°C Temp. Rise	Frame	Wiring Diagram Number	Weight Lbs (kg)	Weathershield	Catalog Number
5	7.5	1 at +5%	1 at –5%	150	912D	286D	193 (88)	**WS38**	**MD075E91**
7.5	11	1 at +5%	1 at –5%	150	912D	286D	158 (72)	**WS38**	**MD11E91**
10	14	1 at +5%	1 at –5%	150	912D	286D	158 (72)	**WS38**	**MD14E91**
15	20	1 at +5%	1 at –5%	150	912D	286D	216 (98)	**WS38**	**MD20E91**
20	27	1 at +5%	1 at –5%	150	912D	286D	231 (105)	**WS38**	**MD27E91**
25	34	1 at +5%	1 at –5%	150	912D	286D	340 (154)	**WS38**	**MD34E91**
30	40	1 at +5%	1 at –5%	150	912D	286D	339 (154)	**WS38**	**MD40E91**
40	51	1 at +5%	1 at –5%	150	914	286D	535 (243)	**WS39**	**MD51E91**
50	63	1 at +5%	1 at –5%	150	914F	286D	480 (218)	**WS39**	**MD63E91**
60	75	1 at +5%	1 at –5%	150	914F	286D	469 (213)	**WS39**	**MD75E91**
75	93	1 at +5%	1 at –5%	150	915F	286D	727 (330)	**WS39**	**MD93E91**
100	118	1 at +5%	1 at –5%	150	916A	286D	770 (350)	**WS19**	**MD118E91**
125	145	1 at +5%	1 at –5%	150	916A	286D	770 (350)	**WS19**	**MD145E91**
150	175	1 at +5%	1 at –5%	150	917	286D	1100 (499)	**WS34**	**MD175E91**
200	220	1 at +5%	1 at –5%	150	917	286D	1299 (590)	**WS34**	**MD220E91**
250	275	1 at +5%	1 at –5%	150	918A	286D	1596 (725)	**WS34**	**MD275E91**
300	330	1 at +5%	1 at –5%	150	919E	318E	2234 (1014)	**WS35**	**MD330E91**
400	440	1 at +5%	1 at –5%	150	919E	318E	2400 (1090)	**WS35**	**MD440E91**

460 Delta Volts to 400Y/231 Volts

hp	kVA	Full Capacity Taps FCAN	FCBN	°C Temp. Rise	Frame	Wiring Diagram Number	Weight Lbs (kg)	Weathershield	Catalog Number
5	7.5	1 at +5%	1 at –5%	150	912D	286D	193 (88)	**WS38**	**MD075E75**
7.5	11	1 at +5%	1 at –5%	150	912D	286D	158 (72)	**WS38**	**MD11E75**
10	14	1 at +5%	1 at –5%	150	912D	286D	158 (72)	**WS38**	**MD14E75**
15	20	1 at +5%	1 at –5%	150	912D	286D	216 (98)	**WS38**	**MD20E75**
20	27	1 at +5%	1 at –5%	150	912D	286D	231 (105)	**WS38**	**MD27E75**
25	34	1 at +5%	1 at –5%	150	912D	286D	340 (154)	**WS38**	**MD34E75**
30	40	1 at +5%	1 at –5%	150	912D	286D	339 (154)	**WS38**	**MD40E75**
40	51	1 at +5%	1 at –5%	150	914F	286D	535 (243)	**WS39**	**MD51E75**
50	63	1 at +5%	1 at –5%	150	914F	286D	480 (218)	**WS39**	**MD63E75**
60	75	1 at +5%	1 at –5%	150	914F	286D	469 (213)	**WS39**	**MD75E75**
75	93	1 at +5%	1 at –5%	150	915F	286D	727 (330)	**WS39**	**MD93E75**
100	118	1 at +5%	1 at –5%	150	916A	286D	770 (350)	**WS19**	**MD118E75**
125	145	1 at +5%	1 at –5%	150	916A	286D	770 (350)	**WS19**	**MD145E75**
150	175	1 at +5%	1 at –5%	150	917	286D	1100 (499)	**WS34**	**MD175E75**
200	220	1 at +5%	1 at –5%	150	917	286D	1299 (590)	**WS34**	**MD220E75**
250	275	1 at +5%	1 at –5%	150	918A	286D	1596 (725)	**WS34**	**MD275E75**
300	330	1 at +5%	1 at –5%	150	919E	318E	2234 (1014)	**WS35**	**MD330E75**
400	440	1 at +5%	1 at –5%	150	919E	318E	2400 (1090)	**WS35**	**MD440E75**

Note

For other ratings or catalog numbers not shown, or for special enclosure types (including stainless steel), refer to Eaton. Frame drawings/dimensions information begins on **Page V2-T2-216**.

Three-Phase Drive Isolation

460 Delta Volts to 460Y/266 Volts

hp	kVA	Full Capacity Taps FCAN	FCBN	°C Temp. Rise	Frame	Wiring Diagram Number	Weight Lbs (kg)	Weathershield	Catalog Number
5	7.5	1 at +5%	1 at –5%	150	912D	286D	164 (74)	**WS38**	**MD075E92**
7.5	11	1 at +5%	1 at –5%	150	912D	286D	161 (73)	**WS38**	**MD11E92**
10	14	1 at +5%	1 at –5%	150	912D	286D	173 (79)	**WS38**	**MD14E92**
15	20	1 at +5%	1 at –5%	150	912D	286D	231 (105)	**WS38**	**MD20E92**
20	27	1 at +5%	1 at –5%	150	912D	286D	250 (114)	**WS38**	**MD27E92**
25	34	1 at +5%	1 at –5%	150	912D	286D	310 (141)	**WS38**	**MD34E92**
30	40	1 at +5%	1 at –5%	150	912D	286D	310 (141)	**WS38**	**MD40E92**
40	51	1 at +5%	1 at –5%	150	914F	286D	503 (228)	**WS39**	**MD51E92**
50	63	1 at +5%	1 at –5%	150	914F	286D	535 (243)	**WS39**	**MD63E92**
60	75	1 at +5%	1 at –5%	150	914F	286D	535 (243)	**WS39**	**MD75E92**
75	93	1 at +5%	1 at –5%	150	916A	286D	710 (322)	**WS19**	**MD93E92**
100	118	1 at +5%	1 at –5%	150	916A	286D	770 (350)	**WS19**	**MD118E92**
125	145	1 at +5%	1 at –5%	150	916A	286D	866 (393)	**WS19**	**MD145E92**
150	175	1 at +5%	1 at –5%	150	917	286D	1100 (499)	**WS34**	**MD175E92**
200	220	1 at +5%	1 at –5%	150	917	286D	1100 (499)	**WS34**	**MD220E92**
250	275	1 at +5%	1 at –5%	150	918A	286D	1469 (667)	**WS34**	**MD275E92**
300	330	1 at +5%	1 at –5%	150	919E	318E	2587 (1174)	**WS35**	**MD330E92**
400	440	1 at +5%	1 at –5%	150	919E	318E	2500 (1135)	**WS35**	**MD440E92**

Note

For other ratings or catalog numbers not shown, or for special enclosure types (including stainless steel), refer to Eaton. Frame drawings/dimensions information begins on **Page V2-T2-216**.

Three-Phase Drive Isolation

480 Delta Volts to 240 Delta Volts

hp	kVA	Full Capacity Taps FCAN	FCBN	°C Temp. Rise	Frame	Wiring Diagram Number	Weight Lbs (kg)	Weathershield	Catalog Number
5	7.5	1 at +5%	1 at –5%	150	912D	300A	193 (88)	**WS38**	**MD075E77**
7.5	11	1 at +5%	1 at –5%	150	912D	300A	158 (72)	**WS38**	**MD11E77**
10	14	1 at +5%	1 at –5%	150	912D	300A	158 (72)	**WS38**	**MD14E77**
15	20	1 at +5%	1 at –5%	150	912D	300A	185 (84)	**WS38**	**MD20E77**
20	27	1 at +5%	1 at –5%	150	912D	300A	231 (105)	**WS38**	**MD27E77**
25	34	1 at +5%	1 at –5%	150	912D	300A	329 (149)	**WS38**	**MD34E77**
30	40	1 at +5%	1 at –5%	150	912D	300A	339 (154)	**WS38**	**MD40E77**
40	51	1 at +5%	1 at –5%	150	914F	300A	535 (243)	**WS39**	**MD51E77**
50	63	1 at +5%	1 at –5%	150	914F	300A	480 (218)	**WS39**	**MD63E77**
60	75	1 at +5%	1 at –5%	150	914F	300A	469 (213)	**WS39**	**MD75E77**
75	93	1 at +5%	1 at –5%	150	915F	300A	727 (330)	**WS39**	**MD93E77**
100	118	1 at +5%	1 at –5%	150	916A	300A	770 (350)	**WS19**	**MD118E77**
125	145	1 at +5%	1 at –5%	150	916A	300A	770 (350)	**WS19**	**MD145E77**
150	175	1 at +5%	1 at –5%	150	917	300A	1100 (499)	**WS34**	**MD175E77**
200	220	1 at +5%	1 at –5%	150	917	300A	1299 (590)	**WS34**	**MD220E77**
250	275	1 at +5%	1 at –5%	150	918A	300A	1596 (725)	**WS34**	**MD275E77**
300	330	1 at +5%	1 at –5%	150	919E	348D	2234 (1014)	**WS35**	**MD330E77**
400	440	1 at +5%	1 at –5%	150	919E	348D	2400 (1090)	**WS35**	**MD440E77**

480 Delta Volts to 480 Delta Volts

hp	kVA	Full Capacity Taps FCAN	FCBN	°C Temp. Rise	Frame	Wiring Diagram Number	Weight Lbs (kg)	Weathershield	Catalog Number
5	7.5	1 at +5%	1 at –5%	150	912D	300A	193 (88)	**WS38**	**MD075E99**
7.5	11	1 at +5%	1 at –5%	150	912D	300A	158 (72)	**WS38**	**MD11E99**
10	14	1 at +5%	1 at –5%	150	912D	300A	158 (72)	**WS38**	**MD14E99**
15	20	1 at +5%	1 at –5%	150	912D	300A	185 (84)	**WS38**	**MD20E99**
20	27	1 at +5%	1 at –5%	150	912D	300A	231 (105)	**WS38**	**MD27E99**
25	34	1 at +5%	1 at –5%	150	912D	300A	329 (149)	**WS38**	**MD34E99**
30	40	1 at +5%	1 at –5%	150	912D	300A	339 (154)	**WS38**	**MD40E99**
40	51	1 at +5%	1 at –5%	150	914F	300A	535 (243)	**WS39**	**MD51E99**
50	63	1 at +5%	1 at –5%	150	914F	300A	480 (218)	**WS39**	**MD63E99**
60	75	1 at +5%	1 at –5%	150	914F	300A	469 (213)	**WS39**	**MD75E99**
75	93	1 at +5%	1 at –5%	150	915F	300A	727 (330)	**WS39**	**MD93E99**
100	118	1 at +5%	1 at –5%	150	916A	300A	770 (350)	**WS19**	**MD118E99**
125	145	1 at +5%	1 at –5%	150	916A	300A	770 (350)	**WS19**	**MD145E99**
150	175	1 at +5%	1 at –5%	150	917	300A	1100 (499)	**WS34**	**MD175E99**
200	220	1 at +5%	1 at –5%	150	917	300A	1299 (590)	**WS34**	**MD220E99**
250	275	1 at +5%	1 at –5%	150	918A	300A	1596 (725)	**WS34**	**MD275E99**
300	330	1 at +5%	1 at –5%	150	919E	348D	2234 (1014)	**WS35**	**MD330E99**
400	440	1 at +5%	1 at –5%	150	919E	348D	2400 (1090)	**WS35**	**MD440E99**

Note

For other ratings or catalog numbers not shown, or for special enclosure types (including stainless steel), refer to Eaton. Frame drawings/dimensions information begins on **Page V2-T2-216**.

Three-Phase Drive Isolation

575 Delta Volts to 460Y/266 Volts

hp	kVA	Full Capacity Taps FCAN	FCBN	°C Temp. Rise	Frame	Wiring Diagram Number	Weight Lbs (kg)	Weathershield	Catalog Number
5	7.5	1 at +5%	1 at –5%	150	912D	286H	158 (72)	**WS38**	**MD075E95**
7.5	11	1 at +5%	1 at –5%	150	912D	286H	158 (72)	**WS38**	**MD11E95**
10	14	1 at +5%	1 at –5%	150	912D	286H	158 (72)	**WS38**	**MD14E95**
15	20	1 at +5%	1 at –5%	150	912D	286H	272 (123)	**WS38**	**MD20E95**
20	27	1 at +5%	1 at –5%	150	912D	286H	266 (121)	**WS38**	**MD27E95**
25	34	1 at +5%	1 at –5%	150	912D	286H	360 (163)	**WS38**	**MD34E95**
30	40	1 at +5%	1 at –5%	150	912D	286H	310 (141)	**WS38**	**MD40E95**
40	51	1 at +5%	1 at –5%	150	914F	286H	504 (229)	**WS39**	**MD51E95**
50	63	1 at +5%	1 at –5%	150	914F	286H	506 (230)	**WS39**	**MD63E95**
60	75	1 at +5%	1 at –5%	150	914F	286H	524 (238)	**WS39**	**MD75E95**
75	93	1 at +5%	1 at –5%	150	916A	286H	730 (331)	**WS19**	**MD93E95**
100	118	1 at +5%	1 at –5%	150	916A	286H	770 (350)	**WS19**	**MD118E95**
125	145	1 at +5%	1 at –5%	150	916A	286H	770 (350)	**WS19**	**MD145E95**
150	175	1 at +5%	1 at –5%	150	917	286H	1282 (582)	**WS34**	**MD175E95**
200	220	1 at +5%	1 at –5%	150	917	286H	1201 (545)	**WS34**	**MD220E95**
250	275	1 at +5%	1 at –5%	150	923	318F	702 (319)	**WS37**	**MD275E95**
300	330	1 at +5%	1 at –5%	150	919E	318F	2263 (1027)	**WS35**	**MD330E95**
400	440	1 at +5%	1 at –5%	150	919E	318F	2400 (1090)	**WS35**	**MD440E95**

575 Delta Volts to 575Y/332 Volts

hp	kVA	Full Capacity Taps FCAN	FCBN	°C Temp. Rise	Frame	Wiring Diagram Number	Weight Lbs (kg)	Weathershield	Catalog Number
5	7.5	1 at +5%	1 at –5%	150	912D	286H	158 (72)	**WS38**	**MD075E96**
7.5	11	1 at +5%	1 at –5%	150	912D	286H	158 (72)	**WS38**	**MD11E96**
10	14	1 at +5%	1 at –5%	150	912D	286H	231 (105)	**WS38**	**MD14E96**
15	20	1 at +5%	1 at –5%	150	912D	286H	231 (105)	**WS38**	**MD20E96**
20	27	1 at +5%	1 at –5%	150	912D	286H	231 (105)	**WS38**	**MD27E96**
25	34	1 at +5%	1 at –5%	150	912D	286H	261 (118)	**WS38**	**MD34E96**
30	40	1 at +5%	1 at –5%	150	912D	286H	310 (141)	**WS38**	**MD40E96**
40	51	1 at +5%	1 at –5%	150	914F	286H	480 (218)	**WS39**	**MD51E96**
50	63	1 at +5%	1 at –5%	150	914F	286H	500 (227)	**WS39**	**MD63E96**
60	75	1 at +5%	1 at –5%	150	914F	286H	538 (244)	**WS39**	**MD75E96**
75	93	1 at +5%	1 at –5%	150	916A	286H	600 (272)	**WS19**	**MD93E96**
100	118	1 at +5%	1 at –5%	150	916A	286H	948 (430)	**WS19**	**MD118E96**
125	145	1 at +5%	1 at –5%	150	916A	286H	868 (394)	**WS19**	**MD145E96**
150	175	1 at +5%	1 at –5%	150	917	286H	1320 (599)	**WS34**	**MD175E96**
200	220	1 at +5%	1 at –5%	150	917	286H	1332 (605)	**WS34**	**MD220E96**
250	275	1 at +5%	1 at –5%	150	918A	318F	1350 (613)	**WS34**	**MD275E96**
300	330	1 at +5%	1 at –5%	150	919E	318F	2336 (1061)	**WS35**	**MD330E96**
400	440	1 at +5%	1 at –5%	150	919E	318F	2500 (1137)	**WS35**	**MD440E96**

Note

For other ratings or catalog numbers not shown, or for special enclosure types (including stainless steel), refer to Eaton. Frame drawings/dimensions information begins on **Page V2-T2-216**.

Accessories

- Copper windings
- Non-standard voltages
- 50/60 Hz designs
- Delta-delta configuration
- 80°C or 115°C rise designs
- Encapsulated designs (up to 34 kVA). Thermoguards are not available on encapsulated designs
- Totally enclosed non-ventilated
- Electrostatic shields

Please refer to Section 2.7 **Page V2-T2-191**.

Technical Data and Specifications

Frequency

Eaton standard dry-type distribution transformers are designed for 60 Hz operation. Transformers required for other frequencies are available and must be specifically designed.

Overload Capability

Short-term overload is designed into transformers as required by ANSI. Dry-type distribution transformers will deliver 200% nameplate load for one-half hour, 150% load for one hour and 125% load for four hours without being damaged, provided that a constant 50% load precedes and follows the overload. See ANSI C57.96-01.250 for additional limitations.

Continuous overload capacity is not deliberately designed into a transformer because the design objective is to be within the allowed winding temperature rise with nameplate loading.

Insulation System and Temperature Rise

Industry standards classify insulation systems and rise as shown below:

Insulation System Classification

Ambient	+ Winding Rise	+ Hot Spot	= Temp. Class
40°C	55°C	10°C	105°C
40°C	80°C	30°C	150°C
25°C	135°C	20°C	180°C
40°C	115°C	30°C	185°C
40°C	150°C	30°C	220°C

The design life of transformers having different insulation systems is the same—the lower-temperature systems are designed for the same life as the higher-temperature systems.

Enclosures

Eaton ventilated transformers, Type MD, use a NEMA 2 rated (drip-proof) enclosure as standard, and are rated NEMA 3R with the addition of weathershields.

Winding Terminations

Primary and secondary windings are terminated in the wiring compartment. Ventilated transformers have leads brought out to aluminum pads that are pre-drilled to accept Cu/Al lugs. **Lugs are not supplied with these transformers.** Eaton recommends that external cables be rated 75°C for ventilated designs.

Sound Levels

All Eaton 600 volt class general-purpose dry-type distribution transformers are designed to meet NEMA ST-20 sound levels listed here. These are the sound levels measured in a soundproof environment. Actual sound levels measured at an installation will likely be higher due to electrical connections and environmental conditions. Lower sound levels are available and should be specified when the transformer is going to be installed in an area where sound may be a concern.

For additional information, please refer to Section 2.7 **Page V2-T2-195**.

Average Sound Levels

NEMA ST-20 Average Sound Level, dB

Equivalent Winding kVA Range	Self-Cooled Ventilated (up to 1.2 kV) K-Factor 1, 4, 9	Self-Cooled Ventilated (up to 1.2 kV) K-Factor 13, 20	Encapsulated (up to 1.2 kV)
3.00 and below	40	40	45
3.01 to 9.00	40	40	45
9.01 to 15.00	45	45	50
15.01 to 30.00	45	45	50
30.01 to 50.00	45	48	50
50.01 to 75.00	50	53	55
75.01 to 112.50	50	53	55
112.51 to 150.00	50	53	55
150.01 to 225.00	55	58	57
225.01 to 300.00	55	58	57
300.01 to 500.00	60	63	59
500.01 to 700.00	62	65	61
700.01 to 1000.00	64	67	63
Greater than 1000	Consult factory	Consult factory	Consult factory

Note

For other ratings or catalog numbers not shown, or for special enclosure types (including stainless steel), refer to Eaton.

Contents

Description	*Page*
Motor Drive Isolation Transformers	**V2-T2-111**
Mini–Power Centers	
Standards and Certifications	**V2-T2-120**
Catalog Number Selection	**V2-T2-121**
Product Selection	**V2-T2-121**
Accessories	**V2-T2-123**
Technical Data and Specifications	**V2-T2-123**
Totally Enclosed Non-Ventilated Transformers	**V2-T2-124**
Class I, Division 2, Hazardous Location Transformers	**V2-T2-127**
Open-Type Core and Coil Assembly Transformers	**V2-T2-130**
Marine Duty Transformers	**V2-T2-133**
Buck-Boost and Low Voltage Lighting Transformers	**V2-T2-144**
Medium Voltage Distribution Transformers	**V2-T2-173**

Mini–Power Centers

Product Description

Note: The following pages provide listings for most standard transformer ratings and catalog numbers. For other ratings or catalog numbers not shown, or for special enclosure types (including stainless steel), refer to Eaton.

- Encapsulated design
- Suitable for indoor or outdoor applications
- 180°C insulation system
- 115°C rise standard; 80°C rise optional

Application Description

A mini–power center combines three individual components into one NEMA Type 3R enclosure: a main breaker, an encapsulated single-phase (Type EP) or three-phase (EPT) dry-type transformer, and a secondary distribution loadcenter with main breaker. Interconnecting wiring is completed at the factory. Mini–power centers are used wherever there is a 480 volt or 600 volt distribution system and loads requiring 208Y/120 volt, three-phase or 120/240 volt single-phase. Typical installations include:

- Industrial plant assembly lines
- Plant expansions
- Test equipment
- Temporary construction site power
- Sewage disposal plants
- Warehouses
- Car washes
- Parking lots
- Commercial buildings

Features, Benefits and Functions

- 60 Hz operation
- Indoor/outdoor, NEMA 3R
- Primary main breaker
- Secondary main breaker (Type BR plug-in and Type BAB bolt-on feeder breakers not included)
- All live parts enclosed for personnel safety
- Cover is hinged to prevent removal and can be padlocked
- Cores are grounded with a copper lead
- Ground bar is supplied to permit grounding of individual secondary circuits
- Neutral bar is grounded to case
- Feeder circuits can be easily added or changed using Type BR plug-in breakers and Type BR plug-in and Type BAB bolt-on
- Suitable for service entrance
- Wide range of configurations available:
  - Aluminum windings and plug-in loadcenter chassis standard
  - Copper windings and plug-in loadcenter chassis also available
  - Copper windings and bolt-on loadcenter chassis available
- Short-term overload capability as required by ANSI
- Meet NEMA ST-20 sound levels

Standards and Certifications

- UL listed
- CSA® certified

Listed

Industry Standards

All Eaton dry-type distribution and control transformers are built and tested in accordance with applicable NEMA, ANSI and IEEE Standards. All 600 volt class transformers are UL listed unless otherwise noted.

Seismically Qualified

Eaton manufactured dry-type distribution transformers are seismically qualified and exceed requirements of the International Building Code (IBC) and California Code Title 24.

Catalog Number Selection

Please refer to Section 2.7 **Page V2-T2-187**.

Product Selection

Additional Product Selection information begins on **Page V2-T2-189**.

Single-Phase

480 Volts to 120/240 Volts

kVA	Full Capacity Taps FCBN	Frame	Wiring Diagram Number	Weight Lbs (kg)	Main Circuit Breaker Primary ①	Main Circuit Breaker Secondary	Feeder Breakers Max. Number ②③ Single-Pole	Feeder Breakers Max. Number ②③ Two-Pole	Max. Amp	Catalog Number
3	2 at –5%	FR283	97A3K	105 (47)	EHD2015	BR215	8	4	12	**P48G11S03P**
5	2 at –5%	FR284	110A5K	110 (50)	EHD2020	BR225	12	6	20	**P48G11S05P**
7.5	2 at –5%	FR284	109A7K	125 (56)	EHD2030	BR230	12	6	30	**P48G11S07P**
10	2 at –5%	FR285	108A10K	180 (82)	EHD2040	BR250	12	6	40	**P48G11S10P**
15	2 at –5%	FR286	107A15K	215 (98)	EHD2060	BR270	20	10	60	**P48G11S15P**
25	2 at –5%	FR287	106A25K	373 (169)	EHD2100	BR2125	26	13	100	**P48G11S25P**

600 Volts to 120/240 Volts

kVA	Full Capacity Taps FCBN	Frame	Wiring Diagram Number	Weight Lbs (kg)	Main Circuit Breaker Primary ①	Main Circuit Breaker Secondary	Feeder Breakers Max. Number ②③ Single-Pole	Feeder Breakers Max. Number ②③ Two-Pole	Max. Amp	Catalog Number
5	2 at –5%	FR284	110B5K	110 (50)	FDB2015	BR225	12	6	20	**P60G11S05P**
7.5	2 at –5%	FR284	109B7K	125 (56)	FDB2030	BR230	12	6	30	**P60G11S07P**
10	2 at –5%	FR285	108B10K	180 (82)	FDB2040	BR250	12	6	40	**P60G11S10P**
15	2 at –5%	FR286	107B15K	215 (98)	FDB2060	BR270	20	10	60	**P60G11S15P**
25	2 at –5%	FR287	106B25K	373 (169)	FDB2100	BR2125	26	13	100	**P60G11S25P**

Three-Phase

480 Delta Volts to 208Y/120 Volts

kVA	Full Capacity Taps FCBN	Frame	Wiring Diagram Number	Weight Lbs (kg)	Main Circuit Breaker Primary	Main Circuit Breaker Secondary	Feeder Breakers Max. Number ②③ Single-Pole	Feeder Breakers Max. Number ②③ Two-Pole	Feeder Breakers Max. Number ②③ Three-Pole	Max. Amp	Catalog Number
15	2 at –5%	FR289A	105A15K	320 (145)	EHD3040	BR350	18	9	6	40	**P48G28T15P**
22.5	2 at –5%	FR290A	103A21K	565 (256)	EHD3070	BR370	18	9	6	60	**P48G28T21P**
30	2 at –5%	FR291A	104A30K	635 (288)	EHD3090	BR3100	24	12	8	80	**P48G28T30P**

600 Delta Volts to 208Y/120 Volts

kVA	Full Capacity Taps FCBN	Frame	Wiring Diagram Number	Weight Lbs (kg)	Main Circuit Breaker Primary	Main Circuit Breaker Secondary	Feeder Breakers Max. Number ②③ Single-Pole	Feeder Breakers Max. Number ②③ Two-Pole	Feeder Breakers Max. Number ②③ Three-Pole	Max. Amp	Catalog Number
15	2 at –5%	FR289A	105D15K	320 (145)	FDB3030	BR350	18	9	6	40	**P60G28T15P**
22.5	2 at –5%	FR290A	103B21K	565 (256)	FDB3050	BR370	18	9	6	60	**P60G28T21P**
30	2 at –5%	FR291A	104B30K	635 (288)	FDB3070	BR3100	24	12	8	80	**P60G28T30P**

Notes

① Primary breakers with higher interrupting capacity available. For HFD breaker, add suffix "H." For FD breaker, add suffix "F." For FDC breaker, add suffix "C." Main breakers are fixed only.

② Combinations can be selected.

③ Feeder breakers not included. Use Eaton's Type BR.

For 304 grade stainless steel enclosure, replace 10th character of catalog number with an "SS" suffix, e.g., P48G11S03SS, or add "SS" suffix before the addition of "CUB."
For 316 grade stainless steel enclosure, replace 10th character of catalog number with an "S6" suffix, e.g., P48G11S03S6, or add "S6" suffix before the addition of "CUB."
For other ratings or catalog numbers not shown, or for special enclosure types (including stainless steel), refer to Eaton. Frame drawings/dimensions information begins on **Page V2-T2-216**.

All Copper, Bolt-On Breaker Designs—Single-Phase

480 Volts to 120/240 Volts

kVA	Full Capacity Taps FCBN	Frame	Wiring Diagram Number	Weight Lbs (kg)	Main Circuit Breaker Primary ①	Main Circuit Breaker Secondary	Feeder Breakers Max. Number ②③ Single-Pole	Feeder Breakers Max. Number ②③ Two-Pole	Max. Amp	Catalog Number
3	2 at –5%	FR306	97A3K	105 (47)	EHD2015L	BAB2015	8	4	12	**P48G11S03CUB**
5	2 at –5%	FR307	110A5K	110 (50)	EHD2020L	BAB2025	12	6	20	**P48G11S05CUB**
7.5	2 at –5%	FR307	109A7K	110 (50)	EHD2030L	BAB2030	12	6	30	**P48G11S07CUB**
10	2 at –5%	FR308	108A10K	180 (82)	EHD2040L	BAB2050	12	6	40	**P48G11S10CUB**
15	2 at –5%	FR309	108A15K	215 (98)	EHD2060L	BAB2070	24	12	60	**P48G11S15CUB**
25	2 at –5%	FR310	106A25K	385 (175)	EHD2100L	BAB2125	26	13	100	**P48G11S25CUB**

600 Volts to 120/240 Volts

kVA	Full Capacity Taps FCBN	Frame	Wiring Diagram Number	Weight Lbs (kg)	Main Circuit Breaker Primary ①	Main Circuit Breaker Secondary	Feeder Breakers Max. Number ②③ Single-Pole	Feeder Breakers Max. Number ②③ Two-Pole	Max. Amp	Catalog Number
3	2 at –5%	FR306	97B3K	105 (47)	FDB2015L	BAB2015	8	4	12	**P60G11S03CUB**
5	2 at –5%	FR307	110B5K	110 (50)	FDB2020L	BAB2025	12	6	20	**P60G11S05CUB**
7.5	2 at –5%	FR307	109B7K	110 (50)	FDB2030L	BAB2030	12	6	30	**P60G11S07CUB**
10	2 at –5%	FR308	108B10K	180 (82)	FDB2040L	BAB2050	12	6	40	**P60G11S10CUB**
15	2 at –5%	FR309	108B15K	215 (98)	FDB2060L	BAB2070	24	12	60	**P60G11S15CUB**
25	2 at –5%	FR310	106B25K	385 (175)	FDB2100L	BAB2125	26	13	100	**P60G11S25CUB**

Three-Phase

480 Volts to 208Y/120 Volts

kVA	Full Capacity Taps FCBN	Frame	Wiring Diagram Number	Weight Lbs (kg)	Main Circuit Breaker Primary	Main Circuit Breaker Secondary	Feeder Breakers Max. Number ②③ Single-Pole	Feeder Breakers Max. Number ②③ Two-Pole	Feeder Breakers Max. Number ②③ Three-Pole	Max. Amp	Catalog Number
15	2 at –5%	FR289A	105A15K	320 (145)	EHD3040L	BAB3050H	18	9	6	40	**P48G28T15CUB**
22.5	2 at –5%	FR290A	103A21K	565 (257)	EHD3070L	BAB3070H	18	9	6	60	**P48G28T21CUB**
30	2 at –5%	FR291A	104A30K	635 (288)	EHD3090L	BAB3100H	24	12	8	80	**P48G28T30CUB**

600 Volts to 208Y/120 Volts

kVA	Full Capacity Taps FCBN	Frame	Wiring Diagram Number	Weight Lbs (kg)	Main Circuit Breaker Primary	Main Circuit Breaker Secondary	Feeder Breakers Max. Number ②③ Single-Pole	Feeder Breakers Max. Number ②③ Two-Pole	Feeder Breakers Max. Number ②③ Three-Pole	Max. Amp	Catalog Number
15	2 at –5%	FR289A	105D15K	320 (145)	FDB3030L	BAB3050H	18	9	6	40	**P60G28T15CUB**
22.5	2 at –5%	FR290A	103B21K	565 (257)	FDB3050L	BAB3070H	18	9	6	60	**P60G28T21CUB**
30	2 at –5%	FR291A	104B30K	635 (288)	FDB3070L	BAB3100H	24	12	8	80	**P60G28T30CUB**

Notes

① Primary breakers with higher interrupting capacity available. For HFD breaker, add suffix "H." For FD breaker, add suffix "F." For FDC breaker, add suffix "C." Main breakers are fixed only. UL Listed only, not CSA.

② Combinations can be selected.

③ Feeder breakers not included. Use Eaton's Type BAB.

For 304 grade stainless steel enclosure, replace 10th character of catalog number with an "SS" suffix, e.g., P48G11S03SS, or add "SS" suffix before the addition of "CUB."
For 316 grade stainless steel enclosure, replace 10th character of catalog number with an "S6" suffix, e.g., P48G11S03S6, or add "S6" suffix before the addition of "CUB."
For other ratings or catalog numbers not shown, or for special enclosure types (including stainless steel), refer to Eaton. Frame drawings/dimensions information begins on **Page V2-T2-216**.

Accessories

Please refer to Section 2.7
Page V2-T2-191.

Technical Data and Specifications

Frequency

Eaton standard dry-type distribution transformers are designed for 60 Hz operation. Transformers required for other frequencies must be specifically designed.

Overload Capability

Short-term overload is designed into transformers as required by ANSI. Dry-type distribution transformers will deliver 200% nameplate load for one-half hour, 150% load for one hour and 125% load for four hours without being damaged, provided that a constant 50% load precedes and follows the overload. See ANSI C57.96-01.250 for additional limitations.

Continuous overload capacity is not deliberately designed into a transformer because the design objective is to be within the allowed winding temperature rise with nameplate loading.

Insulation System and Temperature Rise

Industry standards classify insulation systems and rise as shown below:

Insulation System Classification

Ambient	+ Winding Rise	+ Hot Spot	= Temp. Class
40°C	55°C	10°C	105°C
40°C	80°C	30°C	150°C
25°C	135°C	20°C	180°C
40°C	115°C	30°C	185°C
40°C	150°C	30°C	220°C

The design life of transformers having different insulation systems is the same—the lower-temperature systems are designed for the same life as the higher-temperature systems.

Winding Terminations

Eaton recommends that external cables be rated 90°C (sized at 75°C ampacity) for encapsulated designs and 75°C for ventilated designs.

Sound Levels

All Eaton 600 volt class general-purpose dry-type distribution transformers are designed to meet NEMA ST-20 sound levels listed here. These are the sound levels measured in a soundproof environment. Actual sound levels measured at an installation will likely be higher due to electrical connections and environmental conditions. Lower sound levels are available and should be specified when the transformer is going to be installed in an area where sound may be a concern.

Average Sound Levels

NEMA ST-20 Average Sound Level, dB

Equivalent Winding kVA Range	Self-Cooled Ventilated (up to 1.2 kV) K-Factor 1, 4, 9	Self-Cooled Ventilated (up to 1.2 kV) K-Factor 13, 20	Encapsulated (up to 1.2 kV)
3.00 and below	40	40	45
3.01 to 9.00	40	40	45
9.01 to 15.00	45	45	50
15.01 to 30.00	45	45	50
30.01 to 50.00	45	48	50
50.01 to 75.00	50	53	55
75.01 to 112.50	50	53	55
112.51 to 150.00	50	53	55
150.01 to 225.00	55	58	57
225.01 to 300.00	55	58	57
300.01 to 500.00	60	63	59
500.01 to 700.00	62	65	61
700.01 to 1000.00	64	67	63
Greater than 1000	Consult factory	Consult factory	Consult factory

Note

For other ratings or catalog numbers not shown, or for special enclosure types (including stainless steel), refer to Eaton. The following pages provide listings for most standard transformer ratings and styles. For all-copper and bolt-on-breaker designs, contact Eaton.

Three-Phase Type DT-3E Totally Enclosed Non-Ventilated

Contents

Description	*Page*
Motor Drive Isolation Transformers	**V2-T2-111**
Mini–Power Centers	**V2-T2-119**
Totally Enclosed Non-Ventilated Transformers	
Catalog Number Selection	**V2-T2-125**
Product Selection	**V2-T2-125**
Accessories	**V2-T2-126**
Technical Data and Specifications	**V2-T2-126**
Class I, Division 2, Hazardous Location Transformers	**V2-T2-127**
Open-Type Core and Coil Assembly Transformers	**V2-T2-130**
Marine Duty Transformers	**V2-T2-133**
Buck-Boost and Low Voltage Lighting Transformers	**V2-T2-144**
Medium Voltage Distribution Transformers	**V2-T2-173**

Totally Enclosed Non-Ventilated Transformers

Product Description

Note: The following pages provide listings for most standard transformer ratings and catalog numbers. For other ratings or catalog numbers not shown, or for special enclosure types (including stainless steel), refer to Eaton.

- Suitable for indoor or outdoor applications
- Totally enclosed, non-ventilated enclosures rated NEMA 3R
- 220°C insulation system
- 150°C rise standard; 115°C or 80°C rise optional

Application Description

Totally enclosed non-ventilated dry-type transformers are for special applications, where because of adverse atmospheric conditions it is desirable to use a dry-type non-ventilated transformer vs. the ventilated standard unit, which has openings in its enclosure to allow air to flow directly over the core and coil.

In applications where the atmosphere contains conductive, corrosive, or combustible materials, which might damage a transformer, or lint and dust flyings that might block the ventilation passages, the non-ventilated transformer is highly suited. It has no openings in the enclosure. Heat is dissipated by radiating from the surface area of the enclosure. Consequently, the enclosures are larger than those of the standard ventilated type. Non-ventilated transformers are suited for application in the textile, chemical, automotive, petrochemical, foundry, cement, food, paper and other industries.

Features, Benefits and Functions

- 60 Hz operation (50/60 Hz operation available)
- Short-term overload capability as required by ANSI
- Meet NEMA ST-20 sound levels

Standards and Certifications

- UL listed

Listed

Industry Standards

All Eaton dry-type distribution and control transformers are built and tested in accordance with applicable NEMA, ANSI and IEEE Standards.

Seismically Qualified

Eaton manufactured dry-type distribution transformers are seismically qualified and exceed requirements of the International Building Code (IBC) and California Code Title 24.

Catalog Number Selection

Please refer to Section 2.7 **Page V2-T2-187**.

Product Selection

Additional Product Selection information begins on **Page V2-T2-189**.

Single-Phase—Type DS-3E, 60 Hz ①

240 x 480 Volts to 120/240 Volts +1–5%, –2–5% at 240 Volts Primary; +2–2.5%, –4–2.5% at 480 Volts Primary

kVA	Type	°C Temp. Rise	Frame	Wiring Diagram Number	Weight Lbs (kg)	Catalog Number
15	DS-3E	150	FR817N	3XA	350 (159)	**T20P11S15NV**
25	DS-3E	150	FR818N	3XA	350 (159)	**T20P11S25NV**
37.5	DS-3E	150	FR820N	3XA	600 (274)	**T20P11S37NV**
50	DS-3E	150	FR820N	3XA	720 (329)	**T20P11S50NV**

Three-Phase—Type DT-3E, 60 Hz ①

480 Delta Volts to 208Y/120 Volts +2–2.5% FCAN, 4–2.5% FCBN Taps

kVA	Type	°C Temp. Rise	Frame	Wiring Diagram Number	Weight Lbs (kg)	Catalog Number
15	DT-3E	150	FR914FN	280B	480 (217)	**V48M28T15NV**
30	DT-3E	150	FR914FN	280B	480 (217)	**V48M28T30NV**
45	DT-3E	150	FR915FN	280B	600 (272)	**V48M28T45NV**
75	DT-3E	150	FR916AN	280B	760 (344)	**V48M28T75NV**
112.5	DT-3E	150	FR917N	280B	1100 (499)	**V48M28T12NV**
150	DT-3E	150	FR918AN	280B	1300 (589)	**V48M28T49NV**
225	DT-3E	150	FR919EN	275A	2400 (1088)	**V48M28T22NV**
300	DT-3E	150	FR920EN	275A	2900 (1315)	**V48M28T33NV**

Notes

① Transformers Type EPT 75 kVA and smaller three-phase, and Type EP 37.5 kVA and smaller single-phase, are furnished non-ventilated normally, as standard. See general-purpose transformers.

Contact your local Eaton sales office for availability of additional totally enclosed non-ventilated transformers. Contact your local Eaton sales office for CE Mark transformer requirements. For other ratings or catalog numbers not shown, or for special enclosure types (including stainless steel), refer to Eaton. Frame drawings/dimensions information begins on **Page V2-T2-216**.

Accessories

Please refer to Section 2.7 **Page V2-T2-191**.

Technical Data and Specifications

Frequency

Eaton standard dry-type distribution transformers are designed for 60 Hz operation. Transformers required for other frequencies are available and must be specifically designed.

Overload Capability

Short-term overload is designed into transformers as required by ANSI. Dry-type distribution transformers will deliver 200% nameplate load for one-half hour, 150% load for one hour and 125% load for four hours without being damaged, provided that a constant 50% load precedes and follows the overload. See ANSI C57.96-01.250 for additional limitations.

Continuous overload capacity is not deliberately designed into a transformer because the design objective is to be within the allowed winding temperature rise with nameplate loading.

Insulation System and Temperature Rise

Industry standards classify insulation systems and rise as shown below:

Insulation System Classification

Ambient	+ Winding Rise	+ Hot Spot	= Temp. Class
40°C	55°C	10°C	105°C
40°C	80°C	30°C	150°C
25°C	135°C	20°C	180°C
40°C	115°C	30°C	185°C
40°C	150°C	30°C	220°C

The design life of transformers having different insulation systems is the same—the lower-temperature systems are designed for the same life as the higher-temperature systems.

Enclosures

Eaton totally enclosed, non-ventilated transformers, Types DS-3E and DT-3E, use a NEMA 3R rated enclosure as standard.

Winding Terminations

Primary and secondary windings are terminated in the wiring compartment. Totally enclosed non-ventilated transformers have leads brought out to aluminum pads that are pre-drilled to accept Cu/Al lugs. **Lugs are not supplied with these transformers.** Eaton recommends external cables be rated 75°C for ventilated designs.

Series-Multiple Windings

Series-multiple windings consist of two similar coils in each winding that can be connected in series or parallel (multiple). Transformers with series-multiple windings are designated with an "x" or "/" between the voltage ratings, such as voltages of "120/240" or "240 x 480." If the series-multiple winding is designated by an "x," the winding can be connected only for a series or parallel. With the "/" designation, a mid-point also becomes available in addition to the series or parallel connection. As an example, a 120 x 240 winding can be connected for either 120 (parallel) or 240 (series), but a 120/240 winding can be connected for 120 (parallel), or 240 (series), or 240 with a 120 mid-point.

Note: The preceding pages provide listings for most standard transformer ratings and catalog numbers. For all-copper and bolt-on-breaker designs, contact Eaton. For other ratings or catalog numbers not shown, or for special enclosure types (including stainless steel), refer to Eaton.

Single-Phase Type EPZ Encapsulated

Contents

Description	*Page*
Motor Drive Isolation Transformers	**V2-T2-111**
Mini–Power Centers	**V2-T2-119**
Totally Enclosed Non-Ventilated Transformers	**V2-T2-124**
Class I, Division 2, Hazardous Location Transformers	
Catalog Number Selection	**V2-T2-128**
Product Selection	**V2-T2-128**
Accessories	**V2-T2-129**
Technical Data and Specifications	**V2-T2-129**
Open-Type Core and Coil Assembly Transformers	**V2-T2-130**
Marine Duty Transformers	**V2-T2-133**
Buck-Boost and Low Voltage Lighting Transformers	**V2-T2-144**
Medium Voltage Distribution Transformers	**V2-T2-173**

Class I, Division 2, Hazardous Location Transformers

Product Description

Note: The following pages provide listings for most standard transformer ratings and catalog numbers. For other ratings or catalog numbers not shown, or for special enclosure types (including stainless steel), refer to Eaton.

- Encapsulated design
- Suitable for indoor or outdoor applications
- Totally enclosed, non-ventilated enclosures
- 180°C insulation system
- 115°C rise standard; 80°C rise optional
- Mountable in any position indoors. Upright only outdoors
- Available in ratings up to 600 volts primary, 25 kVA single-phase, 75 kVA three-phase
- Available in NEMA Type 4X enclosure

Application Description

Type EPZ and EPTZ transformers are labeled as "Suitable for use in Class I, Division 2, Groups A, B, C and D locations, as defined by NEC Article 501, with NEC-recommended installation procedures for dry-type transformers rated under 600 volts nominal operation."

A Class I, Division 2 location per Section 500 of the NEC is defined as:

6. A location in which volatile flammable liquids or gases are handled, processed or used, but that normally will be confined within closed containers or systems from which they can escape only in case of accidental rupture or breakdown of the container or system.
7. Or, a location where ignitable concentrations of gases or vapors are normally prevented by positive mechanical ventilation and that might become hazardous through failure of the ventilation equipment.
8. Or, a location that is adjacent to a Class I, Division 1 location and ignitable concentrations of gases or vapors might occasionally enter.

Atmospheres classified by NEC Section 500 as Group A includes acetylene. Group B includes gases such as hydrogen and formaldehyde. Group C may contain gases or vapors such as ethyl ether, ethylene, or the equivalent. Atmospheres classified as Group D may contain gases or vapors such as acetone, ammonia, benzene, butane, cyclopropane, ethanol, gasoline, hexane, methanol, methane, natural gas, naphtha, propane or the equivalent.

Features, Benefits and Functions

- NEMA 3R enclosure
- 60 Hz operation
- Aluminum windings (copper optional)
- Short-term overload capability as required by ANSI
- Meet NEMA ST-20 sound levels

Standards and Certifications

- UL listed

Listed

Industry Standards

All Eaton dry-type distribution and control transformers are built and tested in accordance with applicable NEMA, ANSI and IEEE Standards.

Seismically Qualified

Eaton manufactured dry-type distribution transformers are seismically qualified and exceed requirements of the International Building Code (IBC) and California Code Title 24.

Catalog Number Selection

Please refer to Section 2.7 **Page V2-T2-187**.

Product Selection

Additional Product Selection information begins on **Page V2-T2-189**.

Single-Phase—Type EPZ, 60 Hz

480 Volts to 120/240 Volts

kVA	Full Capacity Taps FCAN	FCBN	Type	°C Temp. Rise	Frame	Wiring Diagram Number	Weight Lbs (kg)	Catalog Number
0.05	—	—	EPZ	115	FR57H	524H	13 (6)	**Z48N11S51A**
0.75	—	—	EPZ	115	FR58H	524H	21 (10)	**Z48N11S76A**
1	—	—	EPZ	115	FR59H	524H	31 (14)	**Z48N11S01A**
1.5	—	—	EPZ	115	FR67H	524H	40 (18)	**Z48N11S16A**
2	—	—	EPZ	115	FR68H	524H	40 (18)	**Z48N11S02A**
3	—	—	EPZ	115	FR176H	524H	65 (30)	**Z48N11S03A**
5	—	—	EPZ	115	FR177H	524H	113 (51)	**Z48N11S05A**
7.5	—	—	EPZ	115	FR178H	524H	123 (56)	**Z48N11S07A**
10	—	—	EPZ	115	FR179H	524H	193 (88)	**Z48N11S10A**
15	—	—	EPZ	115	FR180H	524H	216 (98)	**Z48N11S15A**
25	—	—	EPZ	115	FR182H	524H	375 (170)	**Z48N11S25A**

Three-Phase—Type EPTZ, 60 Hz

480 Delta Volts to 208Y/120 Volts Three-Phase

kVA	Full Capacity Taps FCAN	FCBN	Type	°C Temp. Rise	Frame	Wiring Diagram Number	Weight Lbs (kg)	Catalog Number
3	—	2 at –5%	EPTZ	115	FR201H	70A	116 (53)	**Z48G28T03A**
6	—	2 at –5%	EPTZ	115	FR200H	70A	143 (65)	**Z48G28T06A**
9	—	2 at –5%	EPTZ	115	FR103H	70A	166 (75)	**Z48G28T09A**
15	—	2 at –5%	EPTZ	115	FR95H	70A	275 (125)	**Z48G28T15A**
30	—	2 at –5%	EPTZ	115	FR243H	66A	422 (191)	**Z48G28T30A**
45	—	2 at –5%	EPTZ	115	FR244H	66A	660 (299)	**Z48G28T45A**
75	—	2 at –5%	EPTZ	115	FR245H	66A	1275 (580)	**Z48G28T75A** ①

480 Delta Volts to 240 Delta Volts with 120 Volt Lighting Tap on B Phase ②

kVA	Full Capacity Taps FCAN	FCBN	Type	°C Temp. Rise	Frame	Wiring Diagram Number	Weight Lbs (kg)	Catalog Number
6	—	2 at –5%	EPTZ	115	FR102H	95A	115 (52)	**Z48G22T06A**
9	—	2 at –5%	EPTZ	115	FR97H	95A	160 (73)	**Z48G22T09A**
15	—	2 at –5%	EPTZ	115	FR195H	95A	340 (155)	**Z48G22T15A**
30	—	2 at –5%	EPTZ	115	FR243H	62A	422 (191)	**Z48G22T30A**
45	—	2 at –5%	EPTZ	115	FR244H	62A	660 (299)	**Z48G22T45A**

Notes

① Floor-mount only.

② Center Tap capacity limited to 5% of rated kVA.

For 316 grade stainless steel enclosure, replace 10th character of catalog number with an "SS" suffix. Contact your local Eaton sales office for CE Mark transformer requirements. For other ratings or catalog numbers not shown, or for special enclosure types (including stainless steel), refer to Eaton. Frame drawings/dimensions information begins on **Page V2-T2-216**.

Accessories

Please refer to Section 2.7 **Page V2-T2-191**.

Technical Data and Specifications

Frequency

Eaton standard dry-type distribution transformers are designed for 60 Hz operation. Transformers required for other frequencies are available and must be specifically designed.

Overload Capability

Short-term overload is designed into transformers as required by ANSI. Dry-type distribution transformers will deliver 200% nameplate load for one-half hour, 150% load for one hour, and 125% load for four hours without being damaged, provided that a constant 50% load precedes and follows the overload. See ANSI C57.96-01.250 for additional limitations.

Continuous overload capacity is not deliberately designed into a transformer because the design objective is to be within the allowed winding temperature rise with nameplate loading.

Insulation System and Temperature Rise

Industry standards classify insulation systems and rise as shown below:

Insulation System Classification

Ambient	+ Winding Rise	+ Hot Spot	= Temp. Class
40°C	55°C	10°C	105°C
40°C	80°C	30°C	150°C
25°C	135°C	20°C	180°C
40°C	115°C	30°C	185°C
40°C	150°C	30°C	220°C

The design life of transformers having different insulation systems is the same—the lower-temperature systems are designed for the same life as the higher-temperature systems.

Enclosures

Eaton encapsulated transformers, Types EPZ and EPTZ, use a NEMA 3R rated enclosure.

Sound Levels

All Eaton 600 volt class general-purpose dry-type distribution transformers are designed to meet NEMA ST-20 sound levels listed here. These are the sound levels measured in a soundproof environment. Actual sound levels measured at an installation will likely be higher due to electrical connections and environmental conditions. Lower sound levels are available and should be specified when the transformer is going to be installed in an area where sound may be a concern.

Winding Terminations

Lugs are not supplied with these transformers. Eaton recommends that external cables be rated 90°C sized at 75°C ampacity) for encapsulated designs and 75°C for ventilated designs.

Nominal and tap leads come out of the transformer through pipe elbows. Connections should be made to an adjacent explosion-proof junction box. Unused tap leads must be properly insulated prior to energization. EPZ and EPTZ transformers are UL and cUL listed.

Series-Multiple Windings

Series-multiple windings consist of two similar coils in each winding that can be connected in series or parallel (multiple). Transformers with series-multiple windings are designated with an "x" or "/" between the voltage ratings, such as voltages of "120/240" or "240 x 480." If the series-multiple winding is designated by an "x," the winding can be connected only for a series or parallel. With the "/" designation, a mid-point also becomes available in addition to the series or parallel connection. As an example, a 120 x 240 winding can be connected for either 120 (parallel) or 240 (series), but a 120/240 winding can be connected for 120 (parallel), 240 (series) or 240 with a 120 mid-point.

Contents

Description	*Page*
Motor Drive Isolation Transformers	**V2-T2-111**
Mini–Power Centers	**V2-T2-119**
Totally Enclosed Non-Ventilated Transformers	**V2-T2-124**
Class I, Division 2, Hazardous Location Transformers	**V2-T2-127**
Open-Type Core and Coil Assembly Transformers	
Catalog Number Selection	**V2-T2-131**
Product Selection	**V2-T2-131**
Accessories	**V2-T2-132**
Technical Data and Specifications	**V2-T2-132**
Marine Duty Transformers	**V2-T2-133**
Buck-Boost and Low Voltage Lighting Transformers	**V2-T2-144**
Medium Voltage Distribution Transformers	**V2-T2-173**

Open-Type Core and Coil Assembly Transformers

Product Description

Note: The following pages provide listings for most standard transformer ratings and catalog numbers. For other ratings or catalog numbers not shown, or for special enclosure types (including stainless steel), refer to Eaton.

- 220°C insulation system; 150°C rise standard; 115°C or 80°C optional
- Aluminum windings (copper optional)

Application Description

The basic purpose of a transformer is voltage transformation as near as practically possible to the load for economy and distribution of power. Typical loads for dry-type distribution transformers include lighting, heating, air conditioners, fans and machine tools. Such loads are found in commercial, institutional, industrial and residential structures.

Open core and coil assemblies are typically used by panel builders and equipment OEM customers who incorporate the entire transformer into their structures, making these assemblies a versatile option to purchasing a standard, enclosed transformer and discarding the unneeded enclosure parts.

Features, Benefits and Functions

- 60 Hz operation standard, 50/60 Hz operation available
- Short-term overload capability as required by ANSI
- Meet NEMA ST-20 sound levels

Standards and Certifications

- UL recognized

Industry Standards

All Eaton dry-type distribution and control transformers are built and tested in accordance with applicable NEMA, ANSI and IEEE Standards.

Seismically Qualified

All Eaton manufactured dry-type distribution transformers are seismically qualified and exceed requirements of the International Building Code and California Code Title 24.

Catalog Number Selection

Please refer to Section 2.7 **Page V2-T2-187**.

Product Selection

Additional Product Selection information begins on **Page V2-T2-189**.

Single-Phase—Type DS-3C, 60 Hz

240 x 480 Volts to 120/240 Volts

kVA	Full Capacity Taps FCAN	FCBN	Type	°C Temp. Rise	Frame	Wiring Diagram Number	Weight Lbs (kg)	Catalog Number
15	①	①	DS-3C	150	CS15G103	3XA	246 (112)	**T20P11S15EEZZ**
25	①	①	DS-3C	150	CS25E103	3XA	359 (163)	**T20P11S25EEZZ**
37.5	①	①	DS-3C	150	CS37C103	3XA	374 (170)	**T20P11S37EEZZ**
50	①	①	DS-3C	150	CS50G103	3XA	555 (252)	**T20P11S50EEZZ**

Three-Phase—Type DT-3C, 60 Hz

480 Delta Volts to 208Y/120 Volts

kVA	Full Capacity Taps FCAN	FCBN	Type	°C Temp. Rise	Frame	Wiring Diagram Number	Weight Lbs (kg)	Catalog Number
15	2 at +2.5%	4 at –2.5%	DT-3C	150	CT15H103	280B	191 (87)	**V48M28T15EEZZ**
30	2 at +2.5%	4 at –2.5%	DT-3C	150	CT30E103	280B	251 (114)	**V48M28T30EEZZ**
45	2 at +2.5%	4 at –2.5%	DT-3C	150	CT45E103	280B	367 (167)	**V48M28T45EEZZ**
75	2 at +2.5%	4 at –2.5%	DT-3C	150	CT75E103	280B	491 (223)	**V48M28T75EEZZ**
112.5	2 at +2.5%	4 at –2.5%	DT-3C	150	—	280B	676 (307)	**V48M28T12EEZZ**
150	2 at +2.5%	4 at –2.5%	DT-3C	150	—	280B	796 (362)	**V48M28T49EEZZ**

Notes

① 1 at +5%, 2 at –5% at 240 volts primary; 2 at +2.5%, 4 at –2.5% at 480 volts primary.

Contact your local Eaton sales office for availability of additional open-type core and coil assemblies. Contact your local Eaton sales office for CE Mark transformer requirements. For other ratings or catalog numbers not shown, refer to Eaton. Frame drawings/dimensions information begins on **Page V2-T2-216**.

Accessories

Please refer to Section 2.7 **Page V2-T2-191**.

Technical Data and Specifications

Frequency

Eaton standard dry-type distribution transformers are designed for 60 Hz operation. Transformers required for other frequencies are available and must be specifically designed.

Overload Capability

Short-term overload is designed into transformers as required by ANSI. Dry-type distribution transformers will deliver 200% nameplate load for one-half hour, 150% load for one hour, and 125% load for four hours without being damaged, provided that a constant 50% load precedes and follows the overload. See ANSI C57.96-01.250 for additional limitations.

Continuous overload capacity is not deliberately designed into a transformer because the design objective is to be within the allowed winding temperature rise with nameplate loading.

Insulation System and Temperature Rise

Industry standards classify insulation systems and rise as shown below:

Insulation System Classification

Ambient	+ Winding Rise	+ Hot Spot	= Temp. Class
40°C	55°C	10°C	105°C
40°C	80°C	30°C	150°C
25°C	135°C	20°C	180°C
40°C	115°C	30°C	185°C
40°C	150°C	30°C	220°C

The design life of transformers having different insulation systems is the same—the lower-temperature systems are designed for the same life as the higher-temperature systems.

Winding Terminations

Lugs are not supplied with these transformers. Eaton recommends that external cables be rated 90°C (sized at 75°C ampacity) for encapsulated designs and 75°C for ventilated designs.

Series-Multiple Windings

Series-multiple windings consist of two similar coils in each winding that can be connected in series or parallel (multiple). Transformers with series-multiple windings are designated with an "x" or "/" between the voltage ratings, such as voltages of "120/240" or "240 x 480." If the series-multiple winding is designated by an "x," the winding can be connected only for a series or parallel. With the "/" designation, a mid-point also becomes available in addition to the series or parallel connection. As an example, a 120 x 240 winding can be connected for either 120 (parallel) or 240 (series), but a 120/240 winding can be connected for 120 (parallel), 240 (series) or 240 with a 120 mid-point.

Sound Levels

All Eaton 600 volt class general-purpose dry-type distribution transformers are designed to meet NEMA ST-20 sound levels listed here. These are the sound levels measured in a soundproof environment. Actual sound levels measured at an installation will likely be higher due to electrical connections and environmental conditions. Lower sound levels are available and should be specified when the transformer is going to be installed in an area where sound may be a concern.

For additional information, please refer to Section 2.7 **Page V2-T2-195**.

Average Sound Levels

NEMA ST-20 Average Sound Level, dB

Equivalent Winding kVA Range	Self-Cooled Ventilated (up to 1.2 kV) K-Factor 1, 4, 9	Self-Cooled Ventilated (up to 1.2 kV) K-Factor 13, 20	Encapsulated (up to 1.2 kV)
3.00 and below	40	40	45
3.01 to 9.00	40	40	45
9.01 to 15.00	45	45	50
15.01 to 30.00	45	45	50
30.01 to 50.00	45	48	50
50.01 to 75.00	50	53	55
75.01 to 112.50	50	53	55
112.51 to 150.00	50	53	55
150.01 to 225.00	55	58	57
225.01 to 300.00	55	58	57
300.01 to 500.00	60	63	59
500.01 to 700.00	62	65	61
700.01 to 1000.00	64	67	63
Greater than 1000	Consult factory	Consult factory	Consult factory

Contents

Description	*Page*
Motor Drive Isolation Transformers	**V2-T2-111**
Mini–Power Centers	**V2-T2-119**
Totally Enclosed Non-Ventilated Transformers	**V2-T2-124**
Class I, Division 2, Hazardous Location Transformers	**V2-T2-127**
Open-Type Core and Coil Assembly Transformers	**V2-T2-130**
Marine Duty Transformers	
Catalog Number Selection	**V2-T2-134**
Product Selection	**V2-T2-134**
Accessories	**V2-T2-143**
Technical Data and Specifications	**V2-T2-143**
Buck-Boost and Low Voltage Lighting Transformers	**V2-T2-144**
Medium Voltage Distribution Transformers	**V2-T2-173**

Marine Duty Transformers

Product Description

Note: The following pages provide listings for most standard transformer ratings and catalog numbers. For other ratings or catalog numbers not shown, or for special enclosure types (including stainless steel), refer to Eaton.

Types EP, EPT

- Encapsulated design
- Suitable for indoor or outdoor applications
- Totally enclosed, non-ventilated enclosures
- Enclosures are NEMA 3R rated
- Mountable in any position indoors and upright-only outdoors
- 180°C insulation system
- 115°C rise standard; 80°C rise optional
- Copper windings standard
- Available in single-phase ratings through 37.5 kVA (EP)
- Available in three-phase ratings through 75 kVA (EPT)

Types DS-3, DT-3

- Ventilated, NEMA 2 enclosure standard
- Suitable for indoor applications; outdoors when weathershields are also installed
- Upright mounting only
- 220°C insulation system
- 115°C rise standard; 150°C or 80°C rise optional
- Copper windings standard
- Available in single-phase ratings 15–167 kVA and up to 4160 volts primary (DS-3)
- Available in three-phase ratings 15–1500 kVA and up to 4160 volts primary (DT-3)

Application Description

The basic purpose of a transformer is voltage transformation as near as practically possible to the load for economy and distribution of power. Typical loads for dry-type distribution transformers include lighting, heating, air conditioners, fans and machine tools. Such loads are found in commercial, institutional, industrial and residential structures.

Features, Benefits and Functions

- Meets ABS (American Bureau of Shipping) specification
- ABS Type Approval Certificate Number 04-TP517621-X
- 60 Hz operation
- 115°C temperature rise standard
- Copper windings standard
- Short-term overload capability as required by ANSI
- Meet NEMA ST-20 sound levels

Standards and Certifications

- UL listed

Listed

Industry Standards

All Eaton dry-type distribution and control transformers are built and tested in accordance with applicable NEMA, ANSI and IEEE Standards. All 600 volt class transformers are UL listed unless otherwise noted.

Catalog Number Selection

Please refer to Section 2.7 **Page V2-T2-187**.

Product Selection

Additional Product Selection information begins on **Page V2-T2-189**.

Single-Phase—Type EPM Marine Duty Encapsulated NEMA 3R, 60 Hz

240 x 480 Volts to 120/240 Volts—Copper Windings

kVA	Full Capacity Taps FCAN	FCBN	Type	°C Temp. Rise	Frame	Wiring Diagram Number	Weight Lbs (kg)	Weathershield	Catalog Number
0.05	None	None	EPM	115	FR52	3A050Q	7 (3)	—	**QS20N11S81CU**
0.075	None	None	EPM	115	FR54	3A075Q	7 (3)	—	**QS20N11S85CU**
0.1	None	None	EPM	115	FR54	3A100Q	7 (3)	—	**QS20N11S82CU**
0.15	None	None	EPM	115	FR55	3A150Q	8 (4)	—	**QS20N11S83CU**
0.25	None	None	EPM	115	FR56	3A250Q	12 (5)	—	**QS20N11S26CU**
0.5	None	None	EPM	115	FR57	3A500Q	13 (6)	—	**QS20N11S51CU**
0.75	None	None	EPM	115	FR58A	3A750Q	21 (10)	—	**QS20N11S76CU**
1	None	None	EPM	115	FR59A	3A1Q	31 (14)	—	**QS20N11S01CU**
1.5	None	None	EPM	115	FR67	3A16Q	40 (18)	—	**QS20N11S16CU**
2	None	None	EPM	115	FR68	3A2Q	40 (18)	—	**QS20N11S02CU**
3	None	None	EPM	115	FR176	3A3Q	72 (33)	—	**QS20N11S03CU**
5	None	None	EPM	115	FR177	3A5Q	125 (57)	—	**QS20N11S05CU**
7.5	None	None	EPM	115	FR178	3A7Q	135 (61)	—	**QS20N11S07CU**
10	None	None	EPM	115	FR179	3A10Q	203 (92)	—	**QS20N11S10CU**
15	None	None	EPM	115	FR182	3A15Q	231 (105)	—	**QS20N11S15CU**
25	None	None	EPM	115	FR300A	128A25Q	380 (173)	—	**QS20N11S25CU**
37.5	None	None	EPM	115	FR300A	248A37Q	856 (389)	—	**QS20L11S37CU**

Frame drawings/dimensions information begins on **Page V2-T2-216**.

Single-Phase—Type DS-3M Marine Duty 60 Hz NEMA TP-1 Energy-Efficient ①

120 Volts to 120 Volts—Copper Windings

kVA	Full Capacity Taps FCAN	FCBN	Type	°C Temp. Rise	Frame	Wiring Diagram Number	Weight Lbs (kg)	Weathershield	Catalog Number
15	2 at +2.5%	4 at –2.5%	DS-3M	115	816	56D15R	275 (125)	**WS11**	**RT12M12F15CUEE**
25	2 at +2.5%	4 at –2.5%	DS-3M	115	818	56D25R	440 (200)	**WS11**	**RT12M12F25CUEE**
37.5	2 at +2.5%	4 at –2.5%	DS-3M	115	818	56D37R	480 (218)	**WS11**	**RT12M12F37CUEE**
50	2 at +2.5%	4 at –2.5%	DS-3M	115	819	56D50R	725 (329)	**WS16**	**RT12M12F50CUEE**
75	2 at +2.5%	4 at –2.5%	DS-3M	115	820	56D75R	820 (372)	**WS16**	**RT12M11F75CUEE**
100	2 at +2.5%	4 at –2.5%	DS-3M	115	821	56D100R	1150 (522)	**WS13**	**RT12M11F99CUEE**

208 Volts to 120/240 Volts—Copper Windings

kVA	Full Capacity Taps FCAN	FCBN	Type	°C Temp. Rise	Frame	Wiring Diagram Number	Weight Lbs (kg)	Weathershield	Catalog Number
15	2 at +2.5%	4 at –2.5%	DS-3M	115	816	260A15R	275 (125)	**WS11**	**RT29M11F15CUEE**
25	2 at +2.5%	4 at –2.5%	DS-3M	115	818	260A25R	440 (200)	**WS11**	**RT29M11F25CUEE**
37.5	2 at +2.5%	4 at –2.5%	DS-3M	115	818	260A37R	480 (218)	**WS11**	**RT29M11F37CUEE**
50	2 at +2.5%	4 at –2.5%	DS-3M	115	819	260A50R	725 (329)	**WS16**	**RT29M11F50CUEE**
75	1 at +5%	2 at –5%	DS-3M	115	820	260A75R	820 (372)	**WS16**	**RT29R11F75CUEE**
100	1 at +5%	2 at –5%	DS-3M	115	821	260A100R	1150 (522)	**WS13**	**RT29R11F99CUEE**

240 x 480 Volts to 120/240 Volts—Copper Windings

kVA	Full Capacity Taps FCAN	FCBN	Type	°C Temp. Rise	Frame	Wiring Diagram Number	Weight Lbs (kg)	Weathershield	Catalog Number
15	②	②	DS-3M	115	816	3XA15R	264 (120)	**WS11**	**RT20P11F15CUEE**
25	②	②	DS-3M	115	818	3XA25R	420 (191)	**WS11**	**RT20P11F25CUEE**
37.5	②	②	DS-3M	115	818	3XA37R	450 (204)	**WS11**	**RT20P11F37CUEE**
50	②	②	DS-3M	115	819	3XA50R	703 (319)	**WS16**	**RT20P11F50CUEE**
75	②	②	DS-3M	115	820	3XA75R	793 (360)	**WS16**	**RT20P11F75CUEE**
100	②	②	DS-3M	115	821	3XA100R	1085 (493)	**WS13**	**RT20P11F99CUEE**

277 Volts to 120/240 Volts—Copper Windings

kVA	Full Capacity Taps FCAN	FCBN	Type	°C Temp. Rise	Frame	Wiring Diagram Number	Weight Lbs (kg)	Weathershield	Catalog Number
15	2 at +2.5%	4 at –2.5%	DS-3M	115	816	262C15R	275 (125)	**WS11**	**RT27M11F15CUEE**
25	2 at +2.5%	4 at –2.5%	DS-3M	115	818	262C25R	440 (200)	**WS11**	**RT27M11F25CUEE**
37.5	2 at +2.5%	4 at –2.5%	DS-3M	115	818	262C37R	480 (218)	**WS11**	**RT27M11F37CUEE**
50	2 at +2.5%	4 at –2.5%	DS-3M	115	819	262C50R	725 (329)	**WS16**	**RT27M11F50CUEE**
75	1 at +5%	2 at –5%	DS-3M	115	820	262C75R	820 (372)	**WS16**	**RT27M11F75CUEE**
100	1 at +5%	2 at –5%	DS-3M	115	821	262C100R	1150 (522)	**WS13**	**RT27M11F99CUEE**

Notes

① Suitable for installation in onshore, onboard or offshore applications.

② 1 at +5%, 2 at –5% at 240 volts primary; 2 at +2.5%, 4 at –2.5% at 480 volts primary.

Frame drawings/dimensions information begins on **Page V2-T2-216**.

Single-Phase—Type DS-3M Marine Duty 60 Hz NEMA TP-1 Energy-Efficient ①

208 x 416 Volts to 120/240 Volts—Copper Windings

kVA	Full Capacity Taps FCAN	FCBN	Type	°C Temp. Rise	Frame	Wiring Diagram Number	Weight Lbs (kg)	Weathershield	Catalog Number
15	②	②	DS-3M	115	816	3XF15R	264 (120)	**WS11**	**RT18P11F15CUEE**
25	②	②	DS-3M	115	818	3XF25R	420 (191)	**WS11**	**RT18P11F25CUEE**
37.5	②	②	DS-3M	115	818	3XF37R	450 (204)	**WS11**	**RT18P11F37CUEE**
50	②	②	DS-3M	115	819	3XF50R	703 (319)	**WS16**	**RT18P11F50CUEE**
75	②	②	DS-3M	115	820	3XF75R	793 (360)	**WS16**	**RT18P11F75CUEE**
100	②	②	DS-3M	115	821	3XF100R	1085 (493)	**WS13**	**RT18P11F99CUEE**

600 Volts to 120/240 Volts—Copper Windings

kVA	Full Capacity Taps FCAN	FCBN	Type	°C Temp. Rise	Frame	Wiring Diagram Number	Weight Lbs (kg)	Weathershield	Catalog Number
15	2 at +2.5%	4 at –2.5%	DS-3M	115	816	262B15R	275 (125)	**WS11**	**RT60M11F15CUEE**
25	2 at +2.5%	4 at –2.5%	DS-3M	115	818	262B25R	440 (200)	**WS11**	**RT60M11F25CUEE**
37.5	2 at +2.5%	4 at –2.5%	DS-3M	115	818	262B37R	480 (218)	**WS11**	**RT60M11F37CUEE**
50	2 at +2.5%	4 at –2.5%	DS-3M	115	819	262B50R	725 (329)	**WS16**	**RT60M11F50CUEE**
75	1 at +5%	2 at –5%	DS-3M	115	820	262B75R	820 (372)	**WS16**	**RT60M11F75CUEE**
100	1 at +5%	2 at –5%	DS-3M	115	821	262B100R	1150 (522)	**WS13**	**RT60M11F99CUEE**

Notes

① Suitable for installation in onshore, onboard or offshore applications.

② 1 at +5%, 2 at –5% at 208 volts primary; 2 at +2.5%, 4 at –2.5% at 416 volts primary.

Frame drawings/dimensions information begins on **Page V2-T2-216**.

Three-Phase—Type EPTM Marine Duty Encapsulated NEMA 3R, 60 Hz

480 Delta Volts to 208Y/120 Volts—Copper Windings

kVA	Full Capacity Taps FCAN	FCBN	Type	°C Temp. Rise	Frame	Wiring Diagram Number	Weight Lbs (kg)	Weathershield	Catalog Number
3	None	2 at –5%	EPTM	115	FR201	70A	132 (60)	—	**LY48G28T03CU** ①
6	None	2 at –5%	EPTM	115	FR200	70A	182 (83)	—	**LY48G28T06CU** ①
9	2 at +2.5%	2 at –2.5%	EPTM	115	FR103	72B	221 (100)	—	**LY48D28T09CU** ①
15	2 at +2.5%	2 at –2.5%	EPTM	115	FR95	72B	296 (135)	—	**LY48D28T15CU** ①
30	2 at +2.5%	4 at –2.5%	EPTM	115	FR243	84A	612 (278)	—	**LY48M28T30CU**
45	2 at +2.5%	4 at –2.5%	EPTM	115	FR244	84A	808 (367)	—	**LY48M28T45CU**
75	2 at +2.5%	4 at –2.5%	EPTM	115	FR245	84A	1450 (659)	—	**LY48M28T75CU**

480 Delta Volts to 240 Delta Volts—Copper Windings

kVA	Full Capacity Taps FCAN	FCBN	Type	°C Temp. Rise	Frame	Wiring Diagram Number	Weight Lbs (kg)	Weathershield	Catalog Number
3	None	2 at –5%	EPTM	115	FR201	74A	132 (60)	—	**LY48G24T03CU** ①
6	None	2 at –5%	EPTM	115	FR200	74A	182 (83)	—	**LY48G24T06CU** ①
9	None	2 at –5%	EPTM	115	FR103	74A	221 (100)	—	**LY48G24T09CU** ①
15	2 at +2.5%	2 at –2.5%	EPTM	115	FR243	230A	612 (278)	—	**LY48D24T15CU** ①

Three-Phase—Type DT-3M Marine Duty Ventilated NEMA 2, 60 Hz (NEMA 3R with Weathershield Kit Installed)

480 Delta Volts to 208Y/120 Volts—Copper Windings ②

kVA	Full Capacity Taps FCAN	FCBN	Type	°C Temp. Rise	Frame	Wiring Diagram Number	Weight Lbs (kg)	Weathershield	Catalog Number
15	2 at +2.5%	4 at –2.5%	DT-3M	115	912D	280B15M	252 (114)	**WS38**	**MV48M28F15CU**
30	2 at +2.5%	4 at –2.5%	DT-3M	115	912D	280B30M	299 (136)	**WS38**	**MV48M28F30CU**
45	2 at +2.5%	4 at –2.5%	DT-3M	115	912D	280B45M	414 (188)	**WS38**	**MV48M28F45CU**
75	2 at +2.5%	4 at –2.5%	DT-3M	115	915F	280B75M	662 (301)	**WS39**	**MV48M28F75CU**
112.5	2 at +2.5%	4 at –2.5%	DT-3M	115	916A	280B112M	927 (421)	**WS19**	**MV48M28F12CU**
150	2 at +2.5%	4 at –2.5%	DT-3M	115	916A	280B49M	994 (451)	**WS19**	**MV48M28F49CU**
225	2 at +2.5%	4 at –2.5%	DT-3M	115	917	280B22M	1839 (835)	**WS34**	**MV48M28F22CU**
300	2 at +2.5%	4 at –2.5%	DT-3M	115	918A	280B33M	2134 (969)	**WS34**	**MV48M28F33CU**
500	2 at +2.5%	2 at –2.5%	DT-3M	115	919E	275A55M	3349 (1520)	**WS35**	**MV48M28F55CU**
15	2 at +2.5%	4 at –2.5%	DT-3M	80	912D	280B15M	295 (134)	**WS38**	**MV48M28B15CU**
30	2 at +2.5%	4 at –2.5%	DT-3M	80	912D	280B30M	367 (167)	**WS38**	**MV48M28B30CU**
45	2 at +2.5%	4 at –2.5%	DT-3M	80	915F	280B45M	585 (266)	**WS39**	**MV48M28B45CU**
75	2 at +2.5%	4 at –2.5%	DT-3M	80	916A	280B75M	903 (410)	**WS19**	**MV48M28B75CU**
112.5	2 at +2.5%	4 at –2.5%	DT-3M	80	916A	280B112M	959 (435)	**WS19**	**MV48M28B12CU**
150	2 at +2.5%	4 at –2.5%	DT-3M	80	917	280B49M	1250 (568)	**WS34**	**MV48M28B49CU**
225	2 at +2.5%	4 at –2.5%	DT-3M	80	918A	280B22M	1861 (845)	**WS34**	**MV48M28B22CU**
300	2 at +2.5%	4 at –2.5%	DT-3M	80	919E	280B33M	3600 (1634)	**WS19**	**MV48M28B33CU**

Notes

① T-T (Scott T) connected secondary.

② Not suitable for installation on U.S. or U.S. territory soil. Suitable for offshore or onboard applications.

Frame drawings/dimensions information begins on **Page V2-T2-216**.

Three-Phase—Type DT-3M Marine Duty Ventilated NEMA 2, 60 Hz (NEMA 3R with Weathershield Kit Installed)

480 Delta Volts to 240 Delta Volts with 120 Volt Lighting Tap—Copper Windings ①

kVA	Full Capacity Taps FCAN	FCBN	Type	°C Temp. Rise	Frame	Wiring Diagram Number	Weight Lbs (kg)	Weathershield	Catalog Number
15	2 at +2.5%	4 at –2.5%	DT-3M	115	912D	282B15M	252 (114)	**WS38**	**MV48M22F15CU**
30	2 at +2.5%	4 at –2.5%	DT-3M	115	912D	282B30M	301 (137)	**WS38**	**MV48M22F30CU**
45	2 at +2.5%	4 at –2.5%	DT-3M	115	912D	282B45M	382 (173)	**WS38**	**MV48M22F45CU**
75	2 at +2.5%	4 at –2.5%	DT-3M	115	915F	282B75M	550 (250)	**WS39**	**MV48M22F75CU**
112.5	2 at +2.5%	4 at –2.5%	DT-3M	115	916A	282B112M	675 (306)	**WS19**	**MV48M22F12CU**
150	2 at +2.5%	4 at –2.5%	DT-3M	115	916A	282B49M	860 (390)	**WS19**	**MV48M22F49CU**
225	2 at +2.5%	4 at –2.5%	DT-3M	115	917	282B22M	1839 (835)	**WS34**	**MV48M22F22CU**
300	2 at +2.5%	4 at –2.5%	DT-3M	115	918A	282B33M	2134 (969)	**WS34**	**MV48M22F33CU**
500	2 at +2.5%	2 at –2.5%	DT-3M	115	919E	293A55M	3349 (1520)	**WS35**	**MV48D22F55CU**

480 Delta Volts to 120 Delta Volts—Copper Windings ①

kVA	Full Capacity Taps FCAN	FCBN	Type	°C Temp. Rise	Frame	Wiring Diagram Number	Weight Lbs (kg)	Weathershield	Catalog Number
15	2 at +2.5%	4 at –2.5%	DT-3M	115	912D	295B15M	252 (114)	**WS38**	**MV48M12F15CU**
30	2 at +2.5%	4 at –2.5%	DT-3M	115	912D	295B30M	301 (137)	**WS38**	**MV48M12F30CU**
45	2 at +2.5%	4 at –2.5%	DT-3M	115	912D	295B45M	382 (173)	**WS38**	**MV48M12F45CU**
75	2 at +2.5%	4 at –2.5%	DT-3M	115	915F	295B75M	550 (250)	**WS39**	**MV48M12F75CU**

Three-Phase—Type DT-3M Marine Duty 60 Hz NEMA TP-1 Energy-Efficient

208 Delta Volts to 208Y/120 Volts—Copper Windings ②

kVA	Full Capacity Taps FCAN	FCBN	Type	°C Temp. Rise	Frame	Wiring Diagram Number	Weight Lbs (kg)	Weathershield	Catalog Number
15	2 at +2.5%	4 at –2.5%	DT-3M	115	912D	280E15M	265 (120)	**WS38**	**MV29M28F15CUEE**
30	2 at +2.5%	4 at –2.5%	DT-3M	115	912D	280E30M	475 (215)	**WS38**	**MV29M28F30CUEE**
45	2 at +2.5%	4 at –2.5%	DT-3M	115	912D	280E45M	475 (216)	**WS38**	**MV29M28F45CUEE**
75	2 at +2.5%	4 at –2.5%	DT-3M	115	914F	280E75M	700 (318)	**WS39**	**MV29M28F75CUEE**
112.5	1 at +5%	2 at –5%	DT-3M	115	916A	280E112M	935 (424)	**WS19**	**MV29M28F12CUEE**
150	1 at +5%	2 at –5%	DT-3M	115	916A	280E150M	1274 (578)	**WS19**	**MV29M28F49CUEE**
225	1 at +5%	2 at –5%	DT-3M	115	917	280E225M	1743 (791)	**WS34**	**MV29M28F22CUEE**
300	1 at +5%	2 at –5%	DT-3M	115	919E	280E300M	2350 (1067)	**WS35**	**MV29M28F33CUEE**
500	1 at +5%	2 at –5%	DT-3M	115	920E	280E500M	3690 (1675)	**WS35**	**MV29M28F55CUEE**

Notes

① Not suitable for installation on U.S. or U.S. territory soil. Suitable for offshore or onboard applications.

② Suitable for installation in onshore, onboard or offshore applications.

Frame drawings/dimensions information begins on **Page V2-T2-216**.

Three-Phase—Type DT-3M Marine Duty 60 Hz NEMA TP-1 Energy-Efficient ①

208 Delta Volts to 480Y/277 Volts—Copper Windings

kVA	Full Capacity Taps FCAN	FCBN	Type	°C Temp. Rise	Frame	Wiring Diagram Number	Weight Lbs (kg)	Weathershield	Catalog Number
15	2 at +2.5%	4 at –2.5%	DT-3M	115	912D	342B15M	265 (120)	**WS38**	**MV29M47F15CUEE**
30	2 at +2.5%	4 at –2.5%	DT-3M	115	912D	342B30M	475 (215)	**WS38**	**MV29M47F30CUEE**
45	2 at +2.5%	4 at –2.5%	DT-3M	115	912D	342B45M	475 (216)	**WS38**	**MV29M47F45CUEE**
75	2 at +2.5%	4 at –2.5%	DT-3M	115	914F	342B75M	700 (318)	**WS39**	**MV29M47F75CUEE**
112.5	2 at +2.5%	4 at –2.5%	DT-3M	115	916A	342B112M	935 (424)	**WS19**	**MV29M47F12CUEE**
150	1 at +5%	2 at –5%	DT-3M	115	916A	351A150M	1274 (578)	**WS19**	**MV29R47F49CUEE**
225	1 at +5%	2 at –5%	DT-3M	115	917	333B225M	1743 (791)	**WS34**	**MV29R47F22CUEE**
300	1 at +5%	2 at –5%	DT-3M	115	919E	333B300M	2350 (1067)	**WS35**	**MV29R47F33CUEE**
500	1 at +5%	2 at –5%	DT-3M	115	920E	333B500M	3690 (1675)	**WS35**	**MV29R47F55CUEE**

240 Delta Volts to 208Y/120 Volts—Copper Windings

kVA	Full Capacity Taps FCAN	FCBN	Type	°C Temp. Rise	Frame	Wiring Diagram Number	Weight Lbs (kg)	Weathershield	Catalog Number
15	2 at +2.5%	4 at –2.5%	DT-3M	115	912D	280C15M	265 (120)	**WS38**	**MV24M28F15CUEE**
30	2 at +2.5%	4 at –2.5%	DT-3M	115	912D	280C30M	475 (215)	**WS38**	**MV24M28F30CUEE**
45	2 at +2.5%	4 at –2.5%	DT-3M	115	912D	280C45M	475 (216)	**WS38**	**MV24M28F45CUEE**
75	2 at +2.5%	4 at –2.5%	DT-3M	115	914F	280C75M	700 (318)	**WS39**	**MV24M28F75CUEE**
112.5	2 at +2.5%	4 at –2.5%	DT-3M	115	916A	280C112M	1009 (458)	**WS19**	**MV24M28F12CUEE**
150	1 at +5%	2 at –5%	DT-3M	115	916A	289A150M	1274 (578)	**WS19**	**MV24R28F49CUEE**
225	1 at +5%	2 at –5%	DT-3M	115	917	289A225M	1743 (791)	**WS34**	**MV24R28F22CUEE**
300	1 at +5%	2 at –5%	DT-3M	115	919E	289A300M	2350 (1067)	**WS35**	**MV24R28F33CUEE**
500	1 at +5%	2 at –5%	DT-3M	115	920E	289A500M	3690 (1675)	**WS35**	**MV24R28F55CUEE**

240 Delta Volts to 480Y/277 Volts—Copper Windings

kVA	Full Capacity Taps FCAN	FCBN	Type	°C Temp. Rise	Frame	Wiring Diagram Number	Weight Lbs (kg)	Weathershield	Catalog Number
15	2 at +2.5%	4 at –2.5%	DT-3M	115	912D	342L15M	265 (120)	**WS38**	**MV24M47F15CUEE**
30	2 at +2.5%	4 at –2.5%	DT-3M	115	912D	342L30M	475 (215)	**WS38**	**MV24M47F30CUEE**
45	2 at +2.5%	4 at –2.5%	DT-3M	115	912D	342L45M	475 (216)	**WS38**	**MV24M47F45CUEE**
75	2 at +2.5%	4 at –2.5%	DT-3M	115	914F	342L75M	700 (318)	**WS39**	**MV24M47F75CUEE**
112.5	1 at +5%	2 at –5%	DT-3M	115	916A	351C112M	1009 (458)	**WS19**	**MV24R47F12CUEE**
150	1 at +5%	2 at –5%	DT-3M	115	916A	351C150M	1274 (578)	**WS19**	**MV24R47F49CUEE**
225	1 at +5%	2 at –5%	DT-3M	115	917	333A225M	1743 (791)	**WS34**	**MV24R47F22CUEE**
300	1 at +5%	2 at –5%	DT-3M	115	919E	333A300M	2350 (1067)	**WS35**	**MV24R47F33CUEE**
500	1 at +5%	2 at –5%	DT-3M	115	920E	333A500M	3690 (1675)	**WS35**	**MV24R47F55CUEE**

Notes

① Suitable for installation in onshore, onboard or offshore applications.

Frame drawings/dimensions information begins on **Page V2-T2-216**.

Three-Phase—Type DT-3M Marine Duty 60 Hz NEMA TP-1 Energy-Efficient ①

440 Delta Volts to 220Y/127 Volts—Copper Windings

kVA	Full Capacity Taps FCAN	FCBN	Type	°C Temp. Rise	Frame	Wiring Diagram Number	Weight Lbs (kg)	Weathershield	Catalog Number
15	2 at +2.5%	4 at –2.5%	DT-3M	115	912D	280J15M	256 (116)	**WS38**	**MV44M31F15CUEE**
30	2 at +2.5%	4 at –2.5%	DT-3M	115	912D	280J30M	337 (153)	**WS38**	**MV44M31F30CUEE**
45	2 at +2.5%	4 at –2.5%	DT-3M	115	912D	280J45M	446 (202)	**WS38**	**MV44M31F45CUEE**
75	2 at +2.5%	4 at –2.5%	DT-3M	115	914F	280J75M	662 (301)	**WS39**	**MV44M31F75CUEE**
112.5	2 at +2.5%	4 at –2.5%	DT-3M	115	916A	280J112M	914 (415)	**WS19**	**MV44M31F12CUEE**
150	2 at +2.5%	4 at –2.5%	DT-3M	115	916A	280J150M	1132 (514)	**WS19**	**MV44M31F49CUEE**
225	2 at +2.5%	4 at –2.5%	DT-3M	115	917	280J225M	2036 (924)	**WS34**	**MV44M31F22CUEE**
300	2 at +2.5%	4 at –2.5%	DT-3M	115	923	275F300M	2325 (1056)	**WS37**	**MV44M31F33CUEE**
500	2 at +2.5%	4 at –2.5%	DT-3M	115	919E	275F500M	3681 (1671)	**WS35**	**MV44M31F55CUEE**

480 Delta Volts to 208Y/120 Volts—Copper Windings

kVA	Full Capacity Taps FCAN	FCBN	Type	°C Temp. Rise	Frame	Wiring Diagram Number	Weight Lbs (kg)	Weathershield	Catalog Number
15	2 at +2.5%	4 at –2.5%	DT-3M	115	912D	280B15M	256 (116)	**WS38**	**MV48M28F15CUEE**
30	2 at +2.5%	4 at –2.5%	DT-3M	115	912D	280B30M	337 (153)	**WS38**	**MV48M28F30CUEE**
45	2 at +2.5%	4 at –2.5%	DT-3M	115	912D	280B45M	446 (202)	**WS38**	**MV48M28F45CUEE**
75	2 at +2.5%	4 at –2.5%	DT-3M	115	914F	280B75M	662 (301)	**WS39**	**MV48M28F75CUEE**
112.5	2 at +2.5%	4 at –2.5%	DT-3M	115	916A	280B112M	914 (415)	**WS19**	**MV48M28F12CUEE**
150	2 at +2.5%	4 at –2.5%	DT-3M	115	916A	280B150M	1132 (514)	**WS19**	**MV48M28F49CUEE**
225	2 at +2.5%	4 at –2.5%	DT-3M	115	917	275A225M	2036 (924)	**WS34**	**MV48M28F22CUEE**
300	2 at +2.5%	4 at –2.5%	DT-3M	115	923	275A300M	2325 (1056)	**WS37**	**MV48M28F33CUEE**
500	2 at +2.5%	4 at –2.5%	DT-3M	115	919E	275A500M	3681 (1671)	**WS35**	**MV48M28F55CUEE**

480 Delta Volts to 240 Delta Volts with 120 Volt Lighting Tap on Phase B ②—Copper Windings

kVA	Full Capacity Taps FCAN	FCBN	Type	°C Temp. Rise	Frame	Wiring Diagram Number	Weight Lbs (kg)	Weathershield	Catalog Number
15	2 at +2.5%	4 at –2.5%	DT-3M	115	912D	282B15M	248 (113)	**WS38**	**MV48M22F15CUEE**
30	2 at +2.5%	4 at –2.5%	DT-3M	115	912D	282B30M	410 (186)	**WS38**	**MV48M22F30CUEE**
45	2 at +2.5%	4 at –2.5%	DT-3M	115	912D	282B45M	445 (202)	**WS38**	**MV48M22F45CUEE**
75	2 at +2.5%	4 at –2.5%	DT-3M	115	914F	282B75M	750 (341)	**WS39**	**MV48M22F75CUEE**
112.5	2 at +2.5%	4 at –2.5%	DT-3M	115	916A	282B112M	963 (437)	**WS19**	**MV48M22F12CUEE**
150	2 at +2.5%	4 at –2.5%	DT-3M	115	916A	282B150M	1236 (561)	**WS19**	**MV48M22F49CUEE**
225	2 at +2.5%	4 at –2.5%	DT-3M	115	917	282B225M	2100 (953)	**WS34**	**MV48M22F22CUEE**
300	2 at +2.5%	4 at –2.5%	DT-3M	115	923	282B300M	2600 (1180)	**WS37**	**MV48M22F33CUEE**
500	2 at +2.5%	4 at –2.5%	DT-3M	115	919E	291A500M	3700 (1680)	**WS35**	**MV48M22F55CUEE**

Notes

① Suitable for installation in onshore, onboard or offshore applications.

② Lighting tap limited to 5% of nameplate full load capacity.

Frame drawings/dimensions information begins on **Page V2-T2-216**.

Three-Phase—Type DT-3M Marine Duty 60 Hz NEMA TP-1 Energy-Efficient ①

480 Delta Volts to 480Y/277 Volts—Copper Windings

kVA	Full Capacity Taps FCAN	FCBN	Type	°C Temp. Rise	Frame	Wiring Diagram Number	Weight Lbs (kg)	Weathershield	Catalog Number
15	2 at +2.5%	4 at –2.5%	DT-3M	115	912D	280B15M	258 (117)	**WS38**	**MV48M47F15CUEE**
30	2 at +2.5%	4 at –2.5%	DT-3M	115	912D	280B30M	401 (182)	**WS38**	**MV48M47F30CUEE**
45	2 at +2.5%	4 at –2.5%	DT-3M	115	912D	280B45M	455 (207)	**WS38**	**MV48M47F45CUEE**
75	2 at +2.5%	4 at –2.5%	DT-3M	115	914F	280B75M	678 (308)	**WS39**	**MV48M47F75CUEE**
112.5	2 at +2.5%	4 at –2.5%	DT-3M	115	916A	280B112M	676 (307)	**WS19**	**MV48M47F12CUEE**
150	2 at +2.5%	4 at –2.5%	DT-3M	115	916A	280B150M	1249 (567)	**WS19**	**MV48M47F49CUEE**
225	2 at +2.5%	4 at –2.5%	DT-3M	115	917	275A225M	2107 (957)	**WS34**	**MV48M47F22CUEE**
300	2 at +2.5%	4 at –2.5%	DT-3M	115	923	275A300M	2418 (1098)	**WS37**	**MV48M47F33CUEE**
500	2 at +2.5%	4 at –2.5%	DT-3M	115	919E	275A500M	3800 (1725)	**WS35**	**MV48M47F55CUEE**

600 Delta Volts to 208Y/120 Volts—Copper Windings

kVA	Full Capacity Taps FCAN	FCBN	Type	°C Temp. Rise	Frame	Wiring Diagram Number	Weight Lbs (kg)	Weathershield	Catalog Number
15	2 at +2.5%	4 at –2.5%	DT-3M	115	912D	280A15M	269 (122)	**WS38**	**MV60M28F15CUEE**
30	2 at +2.5%	4 at –2.5%	DT-3M	115	912D	280A30M	354 (161)	**WS38**	**MV60M28F30CUEE**
45	2 at +2.5%	4 at –2.5%	DT-3M	115	912D	280A45M	468 (213)	**WS38**	**MV60M28F45CUEE**
75	2 at +2.5%	4 at –2.5%	DT-3M	115	914F	280A75M	695 (316)	**WS39**	**MV60M28F75CUEE**
112.5	2 at +2.5%	4 at –2.5%	DT-3M	115	916A	280A112M	960 (436)	**WS19**	**MV60M28F12CUEE**
150	2 at +2.5%	4 at –2.5%	DT-3M	115	916A	280A150M	1189 (540)	**WS19**	**MV60M28F49CUEE**
225	2 at +2.5%	4 at –2.5%	DT-3M	115	917	280A225M	2138 (971)	**WS34**	**MV60M28F22CUEE**
300	2 at +2.5%	4 at –2.5%	DT-3M	115	923	280A300M	2441 (1108)	**WS37**	**MV60M28F33CUEE**
500	2 at +2.5%	4 at –2.5%	DT-3M	115	919E	280A500M	3865 (1755)	**WS35**	**MV60M28F55CUEE**

600 Delta Volts to 240 Delta Volts with 120 Volt Lighting Tap on Phase B ②—Copper Windings

kVA	Full Capacity Taps FCAN	FCBN	Type	°C Temp. Rise	Frame	Wiring Diagram Number	Weight Lbs (kg)	Weathershield	Catalog Number
15	2 at +2.5%	4 at –2.5%	DT-3M	115	912D	282B15M	269 (122)	**WS38**	**MV60M22F15CUEE**
30	2 at +2.5%	4 at –2.5%	DT-3M	115	912D	282B30M	354 (161)	**WS38**	**MV60M22F30CUEE**
45	2 at +2.5%	4 at –2.5%	DT-3M	115	912D	282B45M	468 (213)	**WS38**	**MV60M22F45CUEE**
75	2 at +2.5%	4 at –2.5%	DT-3M	115	914F	282B75M	695 (316)	**WS39**	**MV60M22F75CUEE**
112.5	2 at +2.5%	4 at –2.5%	DT-3M	115	916A	282B112M	960 (436)	**WS19**	**MV60M22F12CUEE**
150	2 at +2.5%	4 at –2.5%	DT-3M	115	916A	282B150M	1189 (540)	**WS19**	**MV60M22F49CUEE**
225	2 at +2.5%	4 at –2.5%	DT-3M	115	917	282B225M	2138 (971)	**WS34**	**MV60M22F22CUEE**
300	2 at +2.5%	4 at –2.5%	DT-3M	115	923	282B300M	2441 (1108)	**WS37**	**MV60M22F33CUEE**
500	2 at +2.5%	4 at –2.5%	DT-3M	115	919E	291A500M	3865 (1755)	**WS35**	**MV60M22F55CUEE**

Notes

① Suitable for installation in onshore, onboard or offshore applications.

② Lighting tap limited to 5% of nameplate full load capacity.

Frame drawings/dimensions information begins on **Page V2-T2-216**.

Three-Phase—Type DT-3M Marine Duty 60 Hz NEMA TP-1 Energy-Efficient ①

600 Delta Volts to 480Y/277 Volts—Copper Windings

kVA	Full Capacity Taps FCAN	FCBN	Type	°C Temp. Rise	Frame	Wiring Diagram Number	Weight Lbs (kg)	Weathershield	Catalog Number
15	2 at +2.5%	4 at –2.5%	DT-3M	115	912D	280A15M	284 (129)	**WS38**	**MV60M47F15CUEE**
30	2 at +2.5%	4 at –2.5%	DT-3M	115	912D	280A30M	441 (200)	**WS38**	**MV60M47F30CUEE**
45	2 at +2.5%	4 at –2.5%	DT-3M	115	912D	280A45M	501 (227)	**WS38**	**MV60M47F45CUEE**
75	2 at +2.5%	4 at –2.5%	DT-3M	115	914F	280A75M	746 (339)	**WS39**	**MV60M47F75CUEE**
112.5	2 at +2.5%	4 at –2.5%	DT-3M	115	916A	280A112M	744 (338)	**WS19**	**MV60M47F12CUEE**
150	2 at +2.5%	4 at –2.5%	DT-3M	115	916A	280A150M	1374 (624)	**WS19**	**MV60M47F49CUEE**
225	2 at +2.5%	4 at –2.5%	DT-3M	115	917	280A225M	2318 (1052)	**WS34**	**MV60M47F22CUEE**
300	2 at +2.5%	4 at –2.5%	DT-3M	115	923	280A300M	2660 (1208)	**WS37**	**MV60M47F33CUEE**
500	2 at +2.5%	4 at –2.5%	DT-3M	115	919E	280A500M	4180 (1898)	**WS35**	**MV60M47F55CUEE**

Notes

① Suitable for installation in onshore, onboard or offshore applications.

Frame drawings/dimensions information begins on **Page V2-T2-216**.

Accessories

Please refer to Section 2.7 **Page V2-T2-191**.

Technical Data and Specifications

Frequency

Eaton standard dry-type distribution transformers are designed for 60 Hz operation. Transformers required for other frequencies are available and must be specifically designed.

Overload Capability

Short-term overload is designed into transformers as required by ANSI. Dry-type distribution transformers will deliver 200% nameplate load for one-half hour, 150% load for one hour, and 125% load for four hours without being damaged, provided that a constant 50% load precedes and follows the overload. See ANSI C57.96-01.250 for additional limitations.

Continuous overload capacity is not deliberately designed into a transformer because the design objective is to be within the allowed winding temperature rise with nameplate loading.

Insulation System and Temperature Rise

Industry standards classify insulation systems and rise as shown below:

Insulation System Classification

Ambient	+ Winding Rise	+ Hot Spot	= Temp. Class
40°C	55°C	10°C	105°C
40°C	80°C	30°C	150°C
25°C	135°C	20°C	180°C
40°C	115°C	30°C	185°C
40°C	150°C	30°C	220°C

The design life of transformers having different insulation systems is the same—the lower-temperature systems are designed for the same life as the higher-temperature systems.

Enclosures

Eaton ventilated transformers Types DS-3M and DT-3M use a NEMA 2 rated (drip-proof) enclosure as standard, and are rated NEMA 3R with the addition of weathershields. Eaton encapsulated transformers Types EPM and EPTM use a NEMA 3R rated enclosure.

Winding Terminations

Primary and secondary windings are terminated in the wiring compartment. Encapsulated units have copper leads or stabs brought out for connections. Ventilated transformers have leads brought out to aluminum pads that are pre-drilled to accept Cu/Al lugs. **Lugs are not supplied with these transformers.** Eaton recommends that external cables be rated 90°C (sized at 75°C ampacity) for encapsulated designs and 75°C for ventilated designs.

Series-Multiple Windings

Series-multiple windings consist of two similar coils in each winding that can be connected in series or parallel (multiple). Transformers with series-multiple windings are designated with an "x" or "/" between the voltage ratings, such as voltages of "120/240" or "240 x 480." If the series-multiple winding is designated by an "x," the winding can be connected only for a series or parallel. With the "/" designation, a mid-point also becomes available in addition to the series or parallel connection. As an example, a 120 x 240 winding can be connected for either 120 (parallel) or 240 (series), but a 120/240 winding can be connected for 120 (parallel), 240 (series) or 240 with a 120 mid-point.

Sound Levels

All Eaton 600 volt class general-purpose dry-type distribution transformers are designed to meet NEMA ST-20 sound levels listed here. These are the sound levels measured in a soundproof environment. Actual sound levels measured at an installation will likely be higher due to electrical connections and environmental conditions. Lower sound levels are available and should be specified when the transformer is going to be installed in an area where sound may be a concern.

For additional information, please refer to Section 2.7 **Page V2-T2-195**.

Average Sound Levels

NEMA ST-20 Average Sound Level, dB

Equivalent Winding kVA Range	Self-Cooled Ventilated (up to 1.2 kV) K-Factor 1, 4, 9	Self-Cooled Ventilated (up to 1.2 kV) K-Factor 13, 20	Encapsulated (up to 1.2 kV)
3.00 and below	40	40	45
3.01 to 9.00	40	40	45
9.01 to 15.00	45	45	50
15.01 to 30.00	45	45	50
30.01 to 50.00	45	48	50
50.01 to 75.00	50	53	55
75.01 to 112.50	50	53	55
112.51 to 150.00	50	53	55
150.01 to 225.00	55	58	57
225.01 to 300.00	55	58	57
300.01 to 500.00	60	63	59
500.01 to 700.00	62	65	61
700.01 to 1000.00	64	67	63
Greater than 1000	Consult factory	Consult factory	Consult factory

Type EP

Contents

Description	*Page*
Motor Drive Isolation Transformers	**V2-T2-111**
Mini–Power Centers	**V2-T2-119**
Totally Enclosed Non-Ventilated Transformers	**V2-T2-124**
Class I, Division 2, Hazardous Location Transformers	**V2-T2-127**
Open-Type Core and Coil Assembly Transformers	**V2-T2-130**
Marine Duty Transformers	**V2-T2-133**
Buck-Boost and Low Voltage Lighting Transformers	
Product Selection	**V2-T2-145**
Accessories	**V2-T2-171**
Technical Data and Specifications	**V2-T2-171**
Wiring Diagrams	**V2-T2-172**
Medium Voltage Distribution Transformers	**V2-T2-173**

Buck-Boost and Low Voltage Lighting Transformers

Product Description

Note: The following pages provide listings for most standard transformer ratings and catalog numbers. For other ratings or catalog numbers not shown, or for special enclosure types (including stainless steel), refer to Eaton.

Types EP, EPT

- Encapsulated design
- Suitable for indoor or outdoor applications
- Totally enclosed, non-ventilated enclosures
- Enclosures are NEMA 3R rated
- Mountable in any position indoors and upright-only outdoors
- 180°C insulation system
- 115°C rise standard; 80°C rise optional
- Available in single-phase ratings through 7.5 kVA

Application Description

A buck-boost transformer is used to provide an economical method of correcting a lower or higher voltage rating more suitable for efficient operation of electrical equipment. Type EP buck-boost transformers are small kVA, single-phase transformers with dual primary and dual secondary windings, and are usually connected as autotransformers by using one unit for single-phase applications and either two or three units banked for three-phase operation. They are primarily used for motor operation and should not be used for motor control circuits, to correct fluctuating line voltage or to obtain a neutral on a delta system. Buck-boost transformers are ideally suited for use with low voltage lighting systems, such as outdoor lighting.

Features, Benefits and Functions

- 60 Hz operation
- 600 volt class insulation
- Short-term overload capability as required by ANSI
- Meet NEMA ST-20 sound levels

Standards and Certifications

- UL listed
- CSA certified

Listed

Industry Standards

All Eaton dry-type distribution and control transformers are built and tested in accordance with applicable NEMA, ANSI and IEEE Standards. All 600 volt class transformers are UL listed unless otherwise noted.

Seismically Qualified

Eaton-manufactured dry-type distribution transformers are seismically qualified, and exceed requirements of the International Building Code (IBC) and California Code Title 24.

Catalog Number Selection

Please refer to Section 2.7 **Page V2-T2-187**.

Product Selection

For quick selection data, refer to the tables on this and the following pages.

Selection Requirements

You should have the following information before selecting a buck-boost transformer:

Line Voltage

The voltage that you want to buck (decrease) or boost (increase). This can be found by measuring the supply line voltage with a voltmeter.

Load Voltage

The voltage at which your equipment is designed to operate. This is listed on the nameplate of the load equipment.

Load Amperes or Load kVA

You do not need to know both—one or the other is sufficient for selection purposes. This information usually can be found on the nameplate of the equipment that you want to operate.

Frequency

The supply line frequency must be the same as the frequency of the equipment to be operated—Eaton's buck-boost transformers operate at 60 Hz only.

Phase

The supply line should be the same as the equipment to be operated—either single- or three-phase.

Transformer Interconnection

For three-phase applications, interconnections of transformers should be made in a junction box. Two or three transformers may be used depending on an open delta (2) or wye (3) connection.

5-Step Selector

The tables that follow will simplify the selection of the buck-boost transformers. There are no calculations needed; simply follow these five steps:

1. Refer to the table having the same output voltage as the equipment you want to operate. For example, if you are installing a 240 volt 6 kVA single-phase load use selection table on the page.
2. Select the available line voltage across the top of the chart that is closest to the actual supply voltage. Therefore, for example, if the available line voltage is 213 volts, use the 212 volt column.
3. Read down the column until you reach an output kVA or amps rating equal to or greater than the load requirements. Since 6 kVA, in the example, is not listed, use the next higher rating, or 7.5 kVA.
4. Read across to the far left columns for the catalog number and quantity of transformers for your application. In this case, you will need one (1) catalog number S10N06P01P.
5. Connect the buck-boost transformer(s) you have selected in accordance with the connection diagram specified at the bottom of the available line voltage column. In this example, Diagram "F" would be used.

Note: For single-phase connections and three-phase open delta connections, inputs and outputs may be reversed. kVA capacity remains constant.

Additional Product Selection information begins on **Page V2-T2-189**.

120 x 240 Volts to 12/24 Volts

kVA	°C Temp. Rise	Frame	Weight Lbs (kg)	Catalog Number
0.05	115	FR52	7 (3)	**S10N04A81N**
0.10	115	FR54	7 (3)	**S10N04A82N**
0.15	115	FR55	8 (4)	**S10N04A83N**
0.25	115	FR57P	12 (5)	**S10N04P26P**
0.50	115	FR57P	13 (5)	**S10N04P51P**
0.75	115	FR58AP	21 (10)	**S10N04P76P**
1	115	FR67P	31 (14)	**S10N04P01P**
1.5	115	FR67P	40 (18)	**S10N04P16P**
2	115	FR68P	40 (18)	**S10N04P02P**
3	115	FR176	65 (29)	**S10N04A03N**
5	115	FR177	113 (51)	**S10N04A05N**
7.5	115	FR178	123 (55)	**S10N04A07N**

120 x 240 Volts to 16/32 Volts

kVA	°C Temp. Rise	Frame	Weight Lbs (kg)	Catalog Number
0.05	115	FR52	7 (3)	**S10N06A81N**
0.10	115	FR54	7 (3)	**S10N06A82N**
0.15	115	FR55	8 (4)	**S10N06A83N**
0.25	115	FR57P	12 (5)	**S10N06P26P**
0.50	115	FR57P	13 (5)	**S10N06P51P**
0.75	115	FR58AP	21 (10)	**S10N06P76P**
1	115	FR67P	31 (14)	**S10N06P01P**
1.5	115	FR67P	40 (18)	**S10N06P16P**
2	115	FR68P	40 (18)	**S10N06P02P**
3	115	FR176	65 (29)	**S10N06A03N**
5	115	FR177	113 (51)	**S10N06A05N**
7.5	115	FR178	123 (55)	**S10N06A07N**

240 x 480 Volts to 24/48 Volts

kVA	°C Temp. Rise	Frame	Weight Lbs (kg)	Catalog Number
0.05	115	FR52	7 (3)	**S20N08A81N**
0.10	115	FR54	7 (3)	**S20N08A82N**
0.15	115	FR55	8 (4)	**S20N08A83N**
0.25	115	FR57P	12 (5)	**S20N08P26P**
0.50	115	FR57P	13 (5)	**S20N08P51P**
0.75	115	FR58AP	21 (10)	**S20N08P76P**
1	115	FR67P	31 (14)	**S20N08P01P**
1.5	115	FR67P	40 (18)	**S20N08P16P**
2	115	FR68P	40 (18)	**S20N08P02P**
3	115	FR176	65 (29)	**S20N08A03N**
5	115	FR177	113 (51)	**S20N08A05N**
7.5	115	FR178	123 (55)	**S20N08A07N**

Note

Frame drawings/dimensions information begins on **Page V2-T2-216**.

Single-Phase 115 Volt Output Required, 60 Hz

		Input Available Voltage										
		84		91		96		100		102		
Units Required ①	Unit kVA	Output kVA	Amps	Output kVA	Amps	Output kVA	Amps	Output kVA	Amps	Output kVA	Amps	Catalog Number
1	0.05	—	—	—	—	0.24	2.09	—	—	—	—	**S10N04A81N**
1	0.05	0.13	1.14	0.18	1.56	—	—	0.31	2.70	0.36	3.13	**S10N06A81N**
1	0.10	—	—	—	—	0.48	4.17	—	—	—	—	**S10N04A82N**
1	0.10	0.26	2.29	0.36	3.12	—	—	0.62	5.41	0.72	6.25	**S10N06A82N**
1	0.15	—	—	—	—	0.72	6.25	—	—	—	—	**S10N04A83N**
1	0.15	0.39	3.44	0.54	4.69	—	—	0.93	8.12	1.08	9.37	**S10N06A83N**
1	0.25	—	—	—	—	1.2	10.4	—	—	—	—	**S10N04P26P**
1	0.25	0.659	5.73	0.899	7.81	—	—	1.56	13.5	1.8	15.6	**S10N06P26P**
1	0.50	—	—	—	—	2.4	20.8	—	—	—	—	**S10N04P51P**
1	0.50	1.32	11.5	1.8	15.6	—	—	3.11	27.1	3.59	31.2	**S10N06P51P**
1	0.75	—	—	—	—	3.6	31.2	—	—	—	—	**S10N04P76P**
1	0.75	1.98	17.2	2.7	23.4	—	—	4.67	40.6	5.39	46.8	**S10N06P76P**
1	1	—	—	—	—	4.79	41.7	—	—	—	—	**S10N04P01P**
1	1	2.64	22.9	3.59	31.2	—	—	6.23	54.1	7.19	62.5	**S10N06P01P**
1	1.5	—	—	—	—	7.2	62.5	—	—	—	—	**S10N04P16P**
1	1.5	3.95	34.4	5.39	46.9	—	—	9.34	81.2	10.8	93.7	**S10N06P16P**
1	2	—	—	—	—	9.58	83.3	—	—	—	—	**S10N04P02P**
1	2	5.27	45.8	7.19	62.5	—	—	12.5	108	14.4	125	**S10N06P02P**
1	3	—	—	—	—	14.37	125.1	—	—	—	—	**S10N04A03N**
1	3	7.92	68.7	10.77	93.6	—	—	18.69	162.3	21.57	187.5	**S10N06A03N**
1	5	—	—	—	—	23.95	208.5	—	—	—	—	**S10N04A05N**
1	5	13.2	115	18	156	—	—	31.15	270.5	35.95	312.5	**S10N06A05N**
1	7.5	—	—	—	—	36	312	—	—	—	—	**S10N04A07N**
1	7.5	19.8	172	27	234	—	—	46.7	406	53.9	468	**S10N06A07N**
Connection Diagram ②		D		B		B		C		A		

Notes

① Additional wiring trough may be required.

② Refer to **Page V2-T2-172** for buck-boost wiring diagrams.

Output voltage for lower input voltage can be found by: $\frac{\text{Rated Output Voltage}}{\text{Rated Input Voltage}}$ x Input Actual Voltage = Output New Voltage.

Output kVA available at reduced input voltage can be found by: $\frac{\text{Actual Input Voltage}}{\text{Rated Input Voltage}}$ x Output kVA = New kVA Rating.

Frame drawings/dimensions information begins on **Page V2-T2-216**.

Single-Phase 115 Volt Output Required, 60 Hz

		Input Available Voltage										
		105		127		130		138		146		
Units Required ①	Unit kVA	Output kVA	Amps	Output kVA	Amps	Output kVA	Amps	Output kVA	Amps	Output kVA	Amps	Catalog Number
1	0.05	0.48	4.17	0.54	4.58	—	—	0.29	2.5	—	—	**S10N04A81N**
1	0.05	—	—	—	—	0.41	3.54	—	—	0.23	1.98	**S10N06A81N**
1	0.10	0.96	8.33	1.1	9.17	—	—	0.58	5.0	—	—	**S10N04A82N**
1	0.10	—	—	—	—	0.82	7.08	—	—	0.46	3.95	**S10N06A82N**
1	0.15	1.44	12.5	1.6	13.7	—	—	0.87	7.5	—	—	**S10N04A83N**
1	0.15	—	—	—	—	1.3	10.6	—	—	0.69	5.93	**S10N06A83N**
1	0.25	2.39	20.8	2.63	22.9	—	—	1.44	12.5	—	—	**S10N04P26P**
1	0.25	—	—	—	—	2.03	17.7	—	—	1.14	9.88	**S10N06P26P**
1	0.50	4.79	41.6	5.27	45.8	—	—	2.87	25	—	—	**S10N04P51P**
1	0.50	——	—	—	—	4.07	35.4	—	—	2.27	19.8	**S10N06P51P**
1	0.75	7.19	62.4	7.9	68.7	—	—	4.31	37.5	—	—	**S10N04P76P**
1	0.75	—	—	—	—	6.1	53.1	—	—	3.41	29.6	**S10N06P76P**
1	1	9.58	83.3	10.5	91.7	—	—	5.75	50	—	—	**S10N04P01P**
1	1	—	—	—	—	8.14	70.8	—	—	4.55	39.5	**S10N06P01P**
1	1.5	14.4	125	15.8	137	—	—	8.62	75	—	—	**S10N04P16P**
1	1.5	—	—	—	—	12.2	106	—	—	6.82	59.3	**S10N06P16P**
1	2	19.2	16.7	21.1	183	—	—	11.5	100	—	—	**S10N04P02P**
1	2	—	—	—	—	16.3	142	—	—	9.10	79.2	**S10N06P02P**
1	3	28.7	249.9	31.5	275.1	—	—	17.3	150	—	—	**S10N04A03N**
1	3	—	—	—	—	24.4	212.4	—	—	13.6	118.5	**S10N06A03N**
1	5	47.9	416.5	52.5	458.5	—	—	28.7	250	—	—	**S10N04A05N**
1	5	—	—	—	—	40.7	354	—	—	22.7	197.5	**S10N06A05N**
1	7.5	71.9	624	79	687	—	—	43.1	357	—	—	**S10N04A07N**
1	7.5	—	—	—	—	61	531	—	—	34.1	296	**S10N06A07N**
Connection Diagram ②		A		A		A		B		B		

Notes

① Additional wiring trough may be required.

② Refer to **Page V2-T2-172** for buck-boost wiring diagrams.

Output voltage for lower input voltage can be found by: $\frac{\text{Rated Output Voltage}}{\text{Rated Input Voltage}}$ x Input Actual Voltage = Output New Voltage.

Output kVA available at reduced input voltage can be found by: $\frac{\text{Actual Input Voltage}}{\text{Rated Input Voltage}}$ x Output kVA = New kVA Rating.

Frame drawings/dimensions information begins on **Page V2-T2-216**.

Single-Phase 120 Volt Output Required, 60 Hz

		Input Available Voltage										
		88		95		100		104		106		
Units Required ①	Unit kVA	Output kVA	Amps	Output kVA	Amps	Output kVA	Amps	Output kVA	Amps	Output kVA	Amps	Catalog Number
1	0.05	—	—	—	—	0.25	2.09	—	—	—	—	**S10N04A81N**
1	0.05	0.14	1.15	0.19	1.56	—	—	0.33	2.70	0.38	3.13	**S10N06A81N**
1	0.10	—	—	—	—	0.50	4.17	—	—	—	—	**S10N04A82N**
1	0.10	0.28	2.29	0.38	3.12	—	—	0.65	5.41	0.75	6.25	**S10N06A82N**
1	0.15	—	—	—	—	0.75	6.25	—	—	—	—	**S10N04A83N**
1	0.15	0.41	3.44	0.56	4.69	—	—	0.98	8.12	1.12	9.37	**S10N06A83N**
1	0.25	—	—	—	—	1.25	10.4	—	—	—	—	**S10N04P26P**
1	0.25	0.687	5.73	0.937	7.81	—	—	1.62	13.5	1.87	15.6	**S10N06P26P**
1	0.50	—	—	—	—	2.5	20.8	—	—	—	—	**S10N04P51P**
1	0.50	1.37	11.5	1.87	15.6	—	—	3.25	27.1	3.75	31.2	**S10N06P51P**
1	0.75	—	—	—	—	3.75	31.2	—	—	—	—	**S10N04P76P**
1	0.75	2.06	17.2	2.82	23.4	—	—	4.87	40.6	5.62	46.8	**S10N06P76P**
1	1	—	—	—	—	5	41.7	—	——	—	—	**S10N04P01P**
1	1	2.75	22.9	3.75	31.2	—	—	6.5	54.1	7.5	62.5	**S10N06P01P**
1	1.5	—	—	—	—	7.5	62.5	—	—	—	—	**S10N04P16P**
1	1.5	4.12	34.4	5.62	46.9	—	—	9.75	81.2	11.2	93.7	**S10N06P16P**
1	2	—	—	—	—	10	83.3	—	—	—	—	**S10N04P02P**
1	2	5.5	45.8	7.5	62.5	—	—	13	108	15	125	**S10N06P02P**
1	3	—	—	—	—	15	125.1	—	—	—	—	**S10N04A03N**
1	3	8.25	68.7	11.25	93.6	—	—	19.5	162.3	22.5	187.5	**S10N06A03N**
1	5	—	—	—	—	25	208.5	—	—	—	—	**S10N04A05N**
1	5	13.75	114.5	18.75	156	—	—	32.5	270.5	37.5	312.5	**S10N06A05N**
1	7.5	—	—	—	—	37.5	312	—	—	—	—	**S10N04A07N**
1	7.5	20.6	172	28.2	234	—	—	48.7	406	56.2	468	**S10N06A07N**
Connection Diagram ②		D		B		B		C		A		

Notes

① Additional wiring trough may be required.

② Refer to **Page V2-T2-172** for buck-boost wiring diagrams.

Output voltage for lower input voltage can be found by: $\frac{\text{Rated Output Voltage}}{\text{Rated Input Voltage}}$ x Input Actual Voltage = Output New Voltage.

Output kVA available at reduced input voltage can be found by: $\frac{\text{Actual Input Voltage}}{\text{Rated Input Voltage}}$ x Output kVA = New kVA Rating.

Frame drawings/dimensions information begins on **Page V2-T2-216**.

Single-Phase 120 Volt Output Required, 60 Hz

		Input Available Voltage										
		109		132		136		144		152		
Units Required ①	Unit kVA	Output kVA	Amps	Output kVA	Amps	Output kVA	Amps	Output kVA	Amps	Output kVA	Amps	Catalog Number
1	0.05	0.5	4.17	0.55	4.58	—	—	0.3	2.5	—	—	**S10N04A81N**
1	0.05	—	—	—	—	0.43	3.54	—	—	0.24	1.98	**S10N06A81N**
1	0.10	1.0	8.33	1.1	9.17	—	—	0.6	5.0	—	—	**S10N04A82N**
1	0.10	—	—	—	—	0.85	7.08	—	—	0.48	3.95	**S10N06A82N**
1	0.15	1.5	12.5	1.6	13.7	—	—	0.9	7.5	—	—	**S10N04A83N**
1	0.15	—	—	—	—	1.27	10.6	—	—	0.71	5.93	**S10N06A83N**
1	0.25	2.5	20.8	2.75	22.9	—	—	1.5	12.5	—	—	**S10N04P26P**
1	0.25	—	—	—	—	2.12	17.7	—	—	1.19	9.88	**S10N06P26P**
1	0.50	5	41.6	5.5	45.8	—	—	3	25	—	—	**S10N04P51P**
1	0.50	—	—	—	—	4.25	35.4	—	—	2.37	19.8	**S10N06P51P**
1	0.75	7.5	62.4	8.25	68.7	—	—	4.5	37.5	—	—	**S10N04P76P**
1	0.75	—	—	—	—	6.37	53.1	—	—	3.56	29.6	**S10N06P76P**
1	1	10	83.3	11	91.7	—	—	6	50	—	—	**S10N04P01P**
1	1	—	—	—	—	8.5	70.8	—	—	4.75	39.5	**S10N06P01P**
1	1.5	15	125	16.5	137	—	—	9	75	—	—	**S10N04P16P**
1	1.5	—	—	—	—	12.7	106	—	—	7.12	59.3	**S10N06P16P**
1	2	20	167	22	183	—	—	12	100	—	—	**S10N04P02P**
1	2	—	—	—	—	17	142	—	—	9.5	79.2	**S10N06P02P**
1	3	30	249.9	33	275.1	—	—	18	150	—	—	**S10N04A03N**
1	3	—	—	—	—	25.5	212.4	—	—	14.25	118.5	**S10N06A03N**
1	5	50	416.5	55	458.5	—	—	30	250	—	—	**S10N04A05N**
1	5	—	—	—	—	42.5	354	—	—	23.7	197.5	**S10N06A05N**
1	7.5	75	624	82.5	687	—	—	45	375	—	—	**S10N04A07N**
1	7.5	—	—	—	—	63.7	531	—	—	35.6	296	**S10N06A07N**
Connection Diagram ②		A		A		A		B		B		

Notes

① Additional wiring trough may be required.

② Refer to **Page V2-T2-172** for buck-boost wiring diagrams.

Output voltage for lower input voltage can be found by: $\frac{\text{Rated Output Voltage}}{\text{Rated Input Voltage}}$ x Input Actual Voltage = Output New Voltage.

Output kVA available at reduced input voltage can be found by: $\frac{\text{Actual Input Voltage}}{\text{Rated Input Voltage}}$ x Output kVA = New kVA Rating.

Frame drawings/dimensions information begins on **Page V2-T2-216**.

Single-Phase 230 Volt Output Required, 60 Hz

		Input Available Voltage										
		199		203		207		209		216		
Units Required ①	Unit kVA	Output kVA	Amps	Output kVA	Amps	Output kVA	Amps	Output kVA	Amps	Output kVA	Amps	Catalog Number
1	0.05	—	—	—	—	0.43	1.88	0.48	2.08	—	—	**S10N04A81N**
1	0.05	0.31	1.36	0.36	1.56	—	—	—	—	0.72	3.12	**S10N06A81N**
1	0.10	—	—	—	—	0.86	3.75	0.96	4.17	—	—	**S10N04A82N**
1	0.10	0.62	2.71	0.72	3.12	—	—	—	—	1.44	6.25	**S10N06A82N**
1	0.15	—	—	—	—	1.29	5.62	1.44	6.25	—	—	**S10N04A83N**
1	0.15	0.93	4.06	1.08	4.69	—	—	—	—	2.16	9.37	**S10N06A83N**
1	0.25	—	—	—	—	2.15	9.37	2.39	10.4	—	—	**S10N04P26P**
1	0.25	1.55	6.77	1.8	7.81	—	—	—	—	3.59	15.6	**S10N06P26P**
1	0.50	—	—	—	—	4.31	18.7	4.79	20.8	—	—	**S10N04P51P**
1	0.50	3.11	13.5	3.6	15.6	—	—	—	—	7.19	31.2	**S10N06P51P**
1	0.75	—	—	—	—	6.46	28.2	7.19	31.2	—	—	**S10N04P76P**
1	0.75	4.66	20.3	5.4	23.4	—	—	—	—	10.8	46.8	**S10N06P76P**
1	1	—	—	—	—	8.62	37.5	9.58	41.7	—	—	**S10N04P01P**
1	1	6.23	27.1	7.2	31.2	—	—	—	—	14.4	62.5	**S10N06P01P**
1	1.5	—	—	—	—	12.9	56.2	14.4	62.5	—	—	**S10N04P16P**
1	1.5	9.34	40.6	10.8	46.9	—	—	—	—	21.6	93.7	**S10N06P16P**
1	2	—	—	—	—	17.2	75	19.2	83.3	—	—	**S10N04P02P**
1	2	12.5	54.2	14.4	62.5	—	—	—	—	28.7	125	**S10N06P02P**
1	3	—	—	—	—	25.8	112.5	28.7	125.1	—	—	**S10N04A03N**
1	3	18.6	81.3	21.6	93.6	—	—	—	—	43.2	187.5	**S10N06A03N**
1	5	—	—	—	—	43.1	187.5	47.9	208.5	—	—	**S10N04A05N**
1	5	31.1	135.5	36	156	—	—	—	—	72	312.5	**S10N06A05N**
1	7.5	—	—	—	—	64.6	282	71.9	312	—	—	**S10N04A07N**
1	7.5	46.6	203	54	234	—	—	—	—	108	468	**S10N06A07N**
Connection Diagram ②		G		F		G		F		E		

Notes

① Additional wiring trough may be required.

② Refer to **Page V2-T2-172** for buck-boost wiring diagrams.

Output voltage for lower input voltage can be found by: $\frac{\text{Rated Output Voltage}}{\text{Rated Input Voltage}}$ x Input Actual Voltage = Output New Voltage.

Output kVA available at reduced input voltage can be found by: $\frac{\text{Actual Input Voltage}}{\text{Rated Input Voltage}}$ x Output kVA = New kVA Rating.

Frame drawings/dimensions information begins on **Page V2-T2-216**.

Single-Phase 230 Volt Output Required, 60 Hz

		Input Available Voltage										
		219		242		246		253		260		
Units Required ①	Unit kVA	Output kVA	Amps	Output kVA	Amps	Output kVA	Amps	Output kVA	Amps	Output kVA	Amps	Catalog Number
1	0.05	0.96	4.16	1.0	4.38	—	—	0.53	2.29	—	—	**S10N04A81N**
1	0.05	—	—	—	—	0.77	3.34	—	—	0.41	1.77	**S10N06A81N**
1	0.10	1.92	8.33	2.01	8.75	—	—	1.05	4.58	—	—	**S10N04A82N**
1	0.10	—	—	—	—	1.53	6.67	—	—	0.82	3.54	**S10N06A82N**
1	0.15	2.87	12.5	3.02	13.1	—	—	1.58	6.87	—	—	**S10N04A83N**
1	0.15	—	—	—	—	2.3	10.0	—	—	1.22	5.31	**S10N06A83N**
1	0.25	4.79	20.8	5.03	21.9	—	—	2.63	11.5	—	—	**S10N04P26P**
1	0.25	—	—	—	—	3.83	16.7	—	—	2.04	8.85	**S10N06P26P**
1	0.50	9.58	41.6	10.1	43.7	—	—	5.27	22.9	—	—	**S10N04P51P**
1	0.50	—	—	—	—	7.67	33.3	—	—	4.07	17.7	**S10N06P51P**
1	0.75	14.4	62.4	15.1	65.6	—	—	7.9	34.4	—	—	**S10N04P76P**
1	0.75	—	—	—	—	11.5	50	—	—	6.11	26.6	**S10N06P76P**
1	1	19.2	83.3	20.1	87.5	—	—	10.5	45.8	—	—	**S10N04P01P**
1	1	—	—	—	—	15.3	66.7	—	—	8.15	35.4	**S10N06P01P**
1	1.5	28.7	125	30.2	131	—	—	15.8	68.7	—	—	**S10N04P16P**
1	1.5	—	—	—	—	23	100	—	—	12.2	53.1	**S10N06P16P**
1	2	38.3	167	40.2	175	—	—	21.1	91.7	—	—	**S10N04P02P**
1	2	—	—	—	—	30.7	133	—	—	16.3	70.8	**S10N06P02P**
1	3	57.6	249.9	60.3	262.5	—	—	31.5	137.4	—	—	**S10N04A03N**
1	3	—	—	—	—	45.9	200.1	—	—	24.4	106.2	**S10N06A03N**
1	5	96	416.5	100.5	437.5	—	—	52.5	229	—	—	**S10N04A05N**
1	5	—	—	—	—	76.5	333.5	—	—	40.7	177	**S10N06A05N**
1	7.5	144	624	151	656	—	—	79	344	—	—	**S10N04A07N**
1	7.5	—	—	—	—	115	500	—	—	61.1	266	**S10N06A07N**
Connection Diagram ②		E		E		E		F		F		

Notes

① Additional wiring trough may be required.

② Refer to **Page V2-T2-172** for buck-boost wiring diagrams.

Output voltage for lower input voltage can be found by: $\frac{\text{Rated Output Voltage}}{\text{Rated Input Voltage}}$ x Input Actual Voltage = Output New Voltage.

Output kVA available at reduced input voltage can be found by: $\frac{\text{Actual Input Voltage}}{\text{Rated Input Voltage}}$ x Output kVA = New kVA Rating.

Frame drawings/dimensions information begins on **Page V2-T2-216**.

Single-Phase 240 Volt Output Required, 60 Hz

		Input Available Voltage										
		208		212		216		218		225		
Units Required ①	Unit kVA	Output kVA	Amps	Output kVA	Amps	Output kVA	Amps	Output kVA	Amps	Output kVA	Amps	Catalog Number
1	0.05	—	—	—	—	0.45	1.88	0.5	2.08	—	—	**S10N04A81N**
1	0.05	0.32	1.35	0.38	1.56	—	—	—	—	0.75	3.12	**S10N06A81N**
1	0.10	—	—	—	—	0.9	3.75	1.0	4.17	—	—	**S10N04A82N**
1	0.10	0.65	2.71	0.75	3.12	—	—	—	—	1.5	6.25	**S10N06A82N**
1	0.15	—	—	—	—	1.35	5.62	1.5	6.25	—	—	**S10N04A83N**
1	0.15	0.98	4.06	1.12	4.69	—	—	—	—	2.25	9.37	**S10N06A83N**
1	0.25	—	—	—	—	2.25	9.37	2.5	10.4	—	—	**S10N04P26P**
1	0.25	1.62	6.77	1.87	7.81	—	—	—	—	3.75	15.6	**S10N06P26P**
1	0.50	—	—	—	—	4.5	18.7	5	20.8	—	—	**S10N04P51P**
1	0.50	3.25	13.5	3.75	15.6	—	—	—	—	7.5	31.2	**S10N06P51P**
1	0.75	—	—	—	—	6.75	28.2	7.5	31.2	—	—	**S10N04P76P**
1	0.75	4.87	20.3	5.62	23.4	—	—	—	—	11.2	46.8	**S10N06P76P**
1	1	—	—	—	—	9	37.5	10	41.7	—	—	**S10N04P01P**
1	1	6.5	27.1	7.5	31.2	—	—	—	—	15	62.5	**S10N06A01**
1	1.5	—	—	—	—	13.5	56.2	15	62.5	—	—	**S10N04P16P**
1	1.5	9.75	40.6	11.2	46.9	—	—	—	—	22.5	93.7	**S10N06P16P**
1	2	—	—	—	—	18	75	20	83.3	—	—	**S10N04P02P**
1	2	13	54.2	15	62.5	—	—	—	—	30	125	**S10N06P02P**
1	3	—	—	—	—	27	112.5	30	125.1	—	—	**S10N04A03N**
1	3	19.5	81.3	22.5	93.6	—	—	—	—	45	187.5	**S10N06A03N**
1	5	—	—	—	—	45	187	50	208	—	—	**S10N04A05N**
1	5	32.5	135	37.5	156	—	—	—	—	75	312	**S10N06A05N**
1	7.5	—	—	—	—	67.5	282	75	312	—	—	**S10N04A07N**
1	7.5	48.7	203	56.2	234	—	—	—	—	112	468	**S10N06A07N**
Connection Diagram ②		G		F		G		F		E		

Notes

① Additional wiring trough may be required.

② Refer to **Page V2-T2-172** for buck-boost wiring diagrams.

Output voltage for lower input voltage can be found by: $\frac{\text{Rated Output Voltage}}{\text{Rated Input Voltage}}$ x Input Actual Voltage = Output New Voltage.

Output kVA available at reduced input voltage can be found by: $\frac{\text{Actual Input Voltage}}{\text{Rated Input Voltage}}$ x Output kVA = New kVA Rating.

Frame drawings/dimensions information begins on **Page V2-T2-216**.

Single-Phase 240 Volt Output Required, 60 Hz

		Input Available Voltage										
		229		252		256		264		272		
Units Required ①	Unit kVA	Output kVA	Amps	Output kVA	Amps	Output kVA	Amps	Output kVA	Amps	Output kVA	Amps	Catalog Number
1	0.05	1.0	4.16	1.05	4.38	—	—	0.55	2.29	—	—	**S10N04A81N**
1	0.05	—	—	—	—	0.8	3.33	—	—	0.42	1.77	**S10N06A81N**
1	0.10	2.0	8.33	2.1	8.75	—	—	1.1	4.58	—	—	**S10N04A82N**
1	0.10	—	—	—	—	1.6	6.67	—	—	0.85	3.54	**S10N06A82N**
1	0.15	3.0	12.5	3.15	13.1	—	—	1.65	6.87	—	—	**S10N04A83N**
1	0.15	—	—	—	—	2.4	10.0	—	—	1.27	5.31	**S10N06A83N**
1	0.25	5	20.8	5.25	21.9	—	—	2.75	11.5	—	—	**S10N04P26P**
1	0.25	—	—	—	—	4	16.7	—	—	2.12	8.85	**S10N06P26P**
1	0.50	10	41.6	10.5	43.7	—	—	5.5	22.9	—	—	**S10N04P51P**
1	0.50	—	—	—	—	8	33.3	—	—	4.25	17.7	**S10N06P51P**
1	0.75	15	62.4	15.7	65.6	—	—	8.25	34.4	—	—	**S10N04P76P**
1	0.75	—	—	—	—	12	50	—	—	6.37	26.6	**S10N06P76P**
1	1	20	83.3	21	87.5	—	—	11	45.8	—	—	**S10N04P01P**
1	1	—	—	—	—	16	66.7	—	—	8.5	35.4	**S10N06P01P**
1	1.5	30	125	31.5	131	—	—	16.5	68.7	—	—	**S10N04P16P**
1	1.5	—	—	—	—	24	100	—	—	12.7	53.1	**S10N06P16P**
1	2	40	167	42	175	—	—	22	91.7	—	—	**S10N04P02P**
1	2	—	—	—	—	32	133	—	—	17	70.8	**S10N06P02P**
1	3	60	249.9	63	262.5	—	—	33	137.4	—	—	**S10N04A03N**
1	3	—	—	—	—	48	200.1	—	—	25.5	106.2	**S10N06A03N**
1	5	100	416.5	105	437.5	—	—	55	229	—	—	**S10N04A05N**
1	5	—	—	—	—	80	333	—	—	42.5	177	**S10N06A05N**
1	7.5	150	624	157	656	—	—	82.5	344	—	—	**S10N04A07N**
1	7.5	—	—	—	—	120	500	—	—	63.7	266	**S10N06A07N**
Connection Diagram ②		E		E		E		F		F		

Notes

① Additional wiring trough may be required.

② Refer to **Page V2-T2-172** for buck-boost wiring diagrams.

Output voltage for lower input voltage can be found by: $\frac{\text{Rated Output Voltage}}{\text{Rated Input Voltage}}$ x Input Actual Voltage = Output New Voltage.

Output kVA available at reduced input voltage can be found by: $\frac{\text{Actual Input Voltage}}{\text{Rated Input Voltage}}$ x Output kVA = New kVA Rating.

Frame drawings/dimensions information begins on **Page V2-T2-216**.

Three-Phase Open Delta Connection 230 Volt Output Required, 60 Hz

		Input Available Voltage										
		199		203		207		209		216		
Units Required ①	Unit kVA	Output kVA	Amps	Output kVA	Amps	Output kVA	Amps	Output kVA	Amps	Output kVA	Amps	Catalog Number
2	0.05	—	—	—	—	0.75	1.87	0.83	2.08	—	—	**S10N04A81N**
2	0.05	0.54	1.35	0.62	1.56	—	—	—	—	1.24	3.12	**S10N06A81N**
2	0.10	—	—	—	—	1.49	3.75	1.66	4.17	—	—	**S10N04A82N**
2	0.10	1.08	2.71	1.24	3.12	—	—	—	—	2.49	6.25	**S10N06A82N**
2	0.15	—	—	—	—	2.24	5.62	2.49	6.25	—	—	**S10N04A83N**
2	0.15	1.62	4.06	1.87	4.69	—	—	—	—	3.73	9.37	**S10N06A83N**
2	0.25	—	—	—	—	3.3	9.37	4.15	10.4	—	—	**S10N04P26P**
2	0.25	2.7	6.77	3.11	7.81	—	—	—	—	6.22	15.6	**S10N06P26P**
2	0.50	—	—	—	—	7.47	18.7	8.3	20.8	—	—	**S10N04P51P**
2	0.50	5.39	13.5	6.22	15.6	—	—	—	—	12.4	31.2	**S10N06P51P**
2	0.75	—	—	—	—	11.2	28.2	12.4	31.2	—	—	**S10N04P76P**
2	0.75	8.09	20.3	9.33	23.4	—	—	—	—	18.7	46.8	**S10N06P76P**
2	1	—	—	—	—	14.9	37.5	16.6	41.7	—	—	**S10N04P01P**
2	1	10.8	27.1	12.4	31.2	—	—	—	—	24.9	62.5	**S10N06P01P**
2	1.5	—	—	—	—	22.4	56.2	24.9	62.5	—	—	**S10N04P16P**
2	1.5	16.2	40.6	18.7	46.9	—	—	—	—	37.3	93.7	**S10N06P16P**
2	2	—	—	—	—	29.9	75	33.2	83.3	—	—	**S10N04P02P**
2	2	21.6	54.2	24.9	62.5	—	—	—	—	49.8	125	**S10N06P02P**
2	3	—	—	—	—	44.7	112.5	49.8	125.1	—	—	**S10N04A03N**
2	3	32.4	81.3	32.7	93.6	—	—	—	—	74.7	187.5	**S10N06A03N**
2	5	—	—	—	—	74.7	187	83	208	—	—	**S10N04A05N**
2	5	53.9	135	62.2	156	—	—	—	—	124	312.5	**S10N06A05N**
2	7.5	—	—	—	—	112	282	124	312	—	—	**S10N04A07N**
2	7.5	80.9	203	93.3	234	—	—	—	—	187	468	**S10N06A07N**
Connection Diagram ②		L		K		L		K		I		

Notes

① Additional wiring trough may be required.

② Refer to **Page V2-T2-172** for buck-boost wiring diagrams.

Output voltage for lower input voltage can be found by: $\frac{\text{Rated Output Voltage}}{\text{Rated Input Voltage}}$ x Input Actual Voltage = Output New Voltage.

Output kVA available at reduced input voltage can be found by: $\frac{\text{Actual Input Voltage}}{\text{Rated Input Voltage}}$ x Output kVA = New kVA Rating.

Frame drawings/dimensions information begins on **Page V2-T2-216**.

Three-Phase Open Delta Connection 230 Volt Output Required, 60 Hz

		Input Available Voltage										
		219		242		246		253		260		
Units Required ①	Unit kVA	Output kVA	Amps	Output kVA	Amps	Output kVA	Amps	Output kVA	Amps	Output kVA	Amps	Catalog Number
2	0.05	1.66	4.17	1.74	4.37	—	—	0.91	2.29	—	—	**S10N04A81N**
2	0.05	—	—	—	—	1.33	3.33	—	—	0.70	1.77	**S10N06A81N**
2	0.10	3.32	8.33	3.48	8.75	—	—	1.83	4.58	—	—	**S10N04A82N**
2	0.10	—	—	—	—	2.65	6.67	—	—	1.41	3.54	**S10N06A82N**
2	0.15	4.98	12.5	5.23	13.1	—	—	2.74	6.87	—	—	**S10N04A83N**
2	0.15	—	—	—	—	3.98	10.0	—	—	2.12	5.13	**S10N06A83N**
2	0.25	8.3	20.8	8.71	21.9	—	—	4.56	11.5	—	—	**S10N04P26P**
2	0.25	—	—	—	—	6.64	16.7	—	—	3.52	8.85	**S10N06P26P**
2	0.50	16.6	41.7	17.4	43.7	—	—	9.73	22.9	—	—	**S10N04P51P**
2	0.50	—	—	—	—	13.3	33.3	—	—	7.05	17.7	**S10N06P51P**
2	0.75	24.9	62.4	26.1	65.6	—	—	13.7	34.4	—	—	**S10N04P76P**
2	0.75	—	—	—	—	19.9	50	—	—	10.6	26.6	**S10N06P76P**
2	1	33.2	83.3	34.8	87.5	—	—	18.3	45.8	—	—	**S10N04P01P**
2	1	—	—	—	—	26.5	66.7	—	—	14.1	35.4	**S10N06P01P**
2	1.5	49.8	125	52.3	131	—	—	27.4	68.7	—	—	**S10N04P16P**
2	1.5	—	—	—	—	39.8	100	—	—	21.2	53.1	**S10N06P16P**
2	2	66.4	167	69.7	175	—	—	36.5	91.7	—	—	**S10N04P02P**
2	2	—	—	—	—	53.1	133	—	—	28.2	70.8	**S10N06P02P**
2	3	99.6	249.9	104.4	262.5	—	—	54.9	137.4	—	—	**S10N04A03N**
2	3	—	—	—	—	79.5	200	—	—	42.3	106.2	**S10N06A03N**
2	5	166	417	174	437	—	—	91.3	229	—	—	**S10N04A05N**
2	5	—	—	—	—	133	333	—	—	70.5	177	**S10N06A05N**
2	7.5	249	624	261	656	—	—	137	344	—	—	**S10N04A07N**
2	7.5	—	—	—	—	199	500	—	—	106	266	**S10N06A07N**
Connection Diagram ②		I		I		I		K		K		

Notes

① Additional wiring trough may be required.

② Refer to **Page V2-T2-172** for buck-boost wiring diagrams.

Output voltage for lower input voltage can be found by: $\frac{\text{Rated Output Voltage}}{\text{Rated Input Voltage}}$ x Input Actual Voltage = Output New Voltage.

Output kVA available at reduced input voltage can be found by: $\frac{\text{Actual Input Voltage}}{\text{Rated Input Voltage}}$ x Output kVA = New kVA Rating.

Frame drawings/dimensions information begins on **Page V2-T2-216**.

Three-Phase Open Delta Connection 240 Volt Output Required, 60 Hz

		Input Available Voltage										
		208		212		216		218		225		
Units Required ①	Unit kVA	Output kVA	Amps	Output kVA	Amps	Output kVA	Amps	Output kVA	Amps	Output kVA	Amps	Catalog Number
2	0.05	—	—	—	—	0.73	1.87	0.87	2.08	—	—	**S10N04A81N**
2	0.05	0.56	1.35	0.65	1.56	—	—	—	—	1.3	3.12	**S10N06A81N**
2	0.10	—	—	—	—	1.56	3.75	1.73	4.17	—	—	**S10N04A82N**
2	0.10	1.13	2.71	1.3	3.12	—	—	—	—	2.6	6.25	**S10N06A82N**
2	0.15	—	—	—	—	2.34	5.62	2.6	6.25	—	—	**S10N04A83N**
2	0.15	1.69	4.06	1.95	4.69	—	—	—	—	3.9	9.37	**S10N06A83N**
2	0.25	——	—	—	—	3.9	9.37	4.33	10.4	—	—	**S10N04P26P**
2	0.25	2.81	6.77	3.25	7.81	—	—	—	—	6.49	15.6	**S10N06P26P**
2	0.50	—	—	—	—	7.79	18.7	8.66	20.8	—	—	**S10N04P51P**
2	0.50	5.63	13.5	6.5	15.6	——	—	—	—	13	31.2	**S10N06P51P**
2	0.75	—	—	—	—	11.7	28.2	13	31.2	—	—	**S10N04P76P**
2	0.75	8.44	20.3	9.75	23.4	—	—	—	—	19.5	46.8	**S10N06P76P**
2	1	—	—	—	—	15.6	37.5	17.3	41.7	—	—	**S10N04P01P**
2	1	11.3	27.1	13	31.2	—	—	—	—	26	62.5	**S10N06P01P**
2	1.5	—	—	—	—	23.4	56.2	26	62.5	—	—	**S10N04P16P**
2	1.5	16.9	40.6	19.5	46.9	—	—	—	—	39	93.7	**S10N06P16P**
2	2	—	—	—	—	31.2	75	34.6	83.3	—	—	**S10N04P02P**
2	2	22.5	54.2	26	62.5	—	—	—	—	52	125	**S10N06P02P**
2	3	—	—	—	—	46.8	112.5	51.9	125.1	—	—	**S10N04A03N**
2	3	33.9	81.3	39	93.6	—	—	—	—	78	187.5	**S10N06A03N**
2	5	—	—	—	—	77.9	187	86.6	208	—	—	**S10N04A05N**
2	5	56.3	135	65	156	—	—	—	—	130	312	**S10N06A05N**
2	7.5	—	—	—	—	117	282	130	312	—	—	**S10N04A07N**
2	7.5	84.4	203	97.5	234	—	—	—	—	195	468	**S10N06A07N**
Connection Diagram ②		L		K		L		K		I		

Notes

① Additional wiring trough may be required.

② Refer to **Page V2-T2-172** for buck-boost wiring diagrams.

Output voltage for lower input voltage can be found by: $\frac{\text{Rated Output Voltage}}{\text{Rated Input Voltage}}$ x Input Actual Voltage = Output New Voltage.

Output kVA available at reduced input voltage can be found by: $\frac{\text{Actual Input Voltage}}{\text{Rated Input Voltage}}$ x Output kVA = New kVA Rating.

Frame drawings/dimensions information begins on **Page V2-T2-216**.

Three-Phase Open Delta Connection 240 Volt Output Required, 60 Hz

		Input Available Voltage										
		229		252		256		264		272		
Units Required ①	Unit kVA	Output kVA	Amps	Output kVA	Amps	Output kVA	Amps	Output kVA	Amps	Output kVA	Amps	Catalog Number
2	0.05	1.73	4.16	1.82	4.37	—	—	0.95	2.29	—	—	**S10N04A81N**
2	0.05	—	—	—	—	1.38	3.33	—	—	0.74	1.77	**S10N06A81N**
2	0.10	3.46	8.33	3.64	8.75	—	—	1.91	4.58	—	—	**S10N04A82N**
2	0.10	—	—	—	—	2.77	6.67	—	—	1.47	3.54	**S10N06A82N**
2	0.15	5.19	12.5	5.45	13.1	—	—	2.86	6.87	—	—	**S10N04A83N**
2	0.15	—	—	—	—	4.15	10.0	—	—	2.21	5.31	**S10N06A83N**
2	0.25	8.66	20.8	9.09	21.9	—	—	4.76	11.5	—	—	**S10N04P26P**
2	0.25	—	—	—	—	6.92	16.7	—	—	3.68	8.85	**S10N06P26P**
2	0.50	17.3	41.6	18.2	43.7	—	—	9.53	22.9	—	—	**S10N04P51P**
2	0.50	—	—	—	—	13.8	33.3	—	—	7.36	17.7	**S10N06P51P**
2	0.75	26	62.4	27.3	65.6	—	—	14.3	34.4	—	—	**S10N04P76P**
2	0.75	—	—	—	—	20.8	50	—	—	11	26.6	**S10N06P76P**
2	1	34.6	83.3	36.4	87.5	—	—	19.1	45.8	—	—	**S10N04P01P**
2	1	—	—	—	—	27.7	66.7	—	—	14.7	35.4	**S10N06P01P**
2	1.5	51.9	125	54.5	131	—	—	28.6	68.7	—	—	**S10N04P16P**
2	1.5	—	—	—	—	41.5	100	—	—	22.1	53.1	**S10N06P16P**
2	2	69.3	167	72.7	175	—	—	38.1	91.7	—	—	**S10N04P02P**
2	2	—	—	—	—	55.4	133	—	—	29.4	70.8	**S10N06P02P**
2	3	103.8	249.9	109.2	262.5	—	—	57.3	137.4	—	—	**S10N04A03N**
2	3	—	—	—	—	83.1	200	—	—	44.1	106.2	**S10N06A03N**
2	5	173	416	182	437	—	—	95.3	229	—	—	**S10N04A05N**
2	5	—	—	—	—	138	333	—	—	73.6	177	**S10N06A05N**
2	7.5	260	624	273	656	—	—	143	344	—	—	**S10N04A07N**
2	7.5	—	—	—	—	208	500	—	—	110	266	**S10N06A07N**
Connection Diagram ②		I		I		I		K		K		

Notes

① Additional wiring trough may be required.

② Refer to **Page V2-T2-172** for buck-boost wiring diagrams.

Output voltage for lower input voltage can be found by: $\frac{\text{Rated Output Voltage}}{\text{Rated Input Voltage}}$ x Input Actual Voltage = Output New Voltage.

Output kVA available at reduced input voltage can be found by: $\frac{\text{Actual Input Voltage}}{\text{Rated Input Voltage}}$ x Output kVA = New kVA Rating.

Frame drawings/dimensions information begins on **Page V2-T2-216**.

WARNING! Three-phase autotransformers should never be used to obtain four-wire output with three-wire input. Four-wire output requires four-wire wye input.

Three-Phase Wye Connection 208 Volt Output Required, 60 Hz

		Input Available Voltage										
		152		164		173		180		184		
Units Required ①	Unit kVA	Output kVA	Amps	Output kVA	Amps	Output kVA	Amps	Output kVA	Amps	Output kVA	Amps	Catalog Number
3	0.05	—	—	—	—	0.75	2.08	—	—	—	—	**S10N04A81N**
3	0.05	0.41	1.15	0.56	1.56	—	—	0.98	2.71	1.12	3.12	**S10N06A81N**
3	0.10	—	—	—	—	1.50	4.17	—	—	—	—	**S10N04A82N**
3	0.10	0.82	2.29	1.12	3.12	—	—	1.95	5.41	2.25	6.25	**S10N06A82N**
3	0.15	—	—	—	—	2.25	6.25	—	—	—	—	**S10N04A83N**
3	0.15	1.24	3.44	1.69	4.69	—	—	2.92	8.12	3.73	9.37	**S10N06A83N**
3	0.25	—	—	—	—	3.75	10.4	—	—	—	—	**S10N04P26P**
3	0.25	2.06	5.73	2.81	7.81	—	—	4.87	13.5	5.62	15.6	**S10N06P26P**
3	0.50	—	—	—	—	7.5	20.8	—	—	—	—	**S10N04P51P**
3	0.50	4.12	11.5	5.62	15.6	—	—	9.75	27.1	11.2	31.2	**S10N06P51P**
3	0.75	—	—	—	—	11.2	31.2	—	—	—	—	**S10N04P76P**
3	0.75	6.19	17.2	8.44	23.4	—	—	14.6	40.6	16.8	46.8	**S10N06P76P**
3	1	—	—	—	—	15	41.7	—	—	—	—	**S10N04P01P**
3	1	8.25	22.9	11.2	31.2	—	—	19.5	54.1	22.5	62.5	**S10N06P01P**
3	1.5	—	—	—	—	22.5	62.5	—	—	—	—	**S10N04P16P**
3	1.5	12.4	34.4	16.9	46.9	—	—	29.2	81.2	33.7	93.7	**S10N06P16P**
3	2	—	—	—	—	30	83.3	—	—	—	—	**S10N04P02P**
3	2	16.5	45.8	22.5	62.5	—	—	39	108	45	125	**S10N06P02P**
3	3	—	—	—	—	45	125	—	—	—	—	**S10N04A03N**
3	3	24.7	68.7	33.6	93.6	—	—	58.5	162.3	67.5	187.5	**S10N06A03N**
3	5	—	—	—	—	75	208	—	—	—	—	**S10N04A05N**
3	5	41.2	115	56.2	156	—	—	97.5	271	112	312	**S10N06A05N**
3	7.5	—	—	—	—	112	312	—	—	—	—	**S10N04A07N**
3	7.5	61.9	172	84.4	234	—	—	146	406	168	468	**S10N06A07N**
Connection Diagram ②		P		N		N		O		M		

Notes

① Additional wiring trough may be required.

② Refer to **Page V2-T2-172** for buck-boost wiring diagrams.

Output voltage for lower input voltage can be found by: $\frac{\text{Rated Output Voltage}}{\text{Rated Input Voltage}}$ x Input Actual Voltage = Output New Voltage.

Output kVA available at reduced input voltage can be found by: $\frac{\text{Actual Input Voltage}}{\text{Rated Input Voltage}}$ x Output kVA = New kVA Rating.

Frame drawings/dimensions information begins on **Page V2-T2-216**.

WARNING! Three-phase autotransformers should never be used to obtain four-wire output with three-wire input. Four-wire output requires four-wire wye input.

Three-Phase Wye Connection 208 Volt Output Required, 60 Hz

		Input Available Voltage										
		189		229		236		250		264		
Units Required ①	Unit kVA	Output kVA	Amps	Output kVA	Amps	Output kVA	Amps	Output kVA	Amps	Output kVA	Amps	Catalog Number
3	0.05	1.5	4.16	1.65	4.58	—	—	0.9	2.5	—	—	**S10N04A81N**
3	0.05	—	—	—	—	1.27	3.54	—	—	0.71	1.98	**S10N06A81N**
3	0.10	3.0	8.33	3.3	9.17	—	—	1.8	5.0	—	—	**S10N04A82N**
3	0.10	—	—	—	—	2.55	7.08	—	—	1.42	3.95	**S10N06A82N**
3	0.15	4.5	12.5	4.95	13.7	—	—	2.7	7.5	—	—	**S10N04A83N**
3	0.15	—	—	—	—	3.82	10.6	—	—	2.14	5.93	**S10N06A83N**
3	0.25	7.5	20.8	8.25	22.9	—	—	4.5	12.5	—	—	**S10N04P26P**
3	0.25	—	—	—	—	6.35	17.7	—	—	3.56	9.88	**S10N06P26P**
3	0.50	15	41.6	16.5	45.8	—	—	9	25	—	—	**S10N04P51P**
3	0.50	—	—	—	—	12.7	35.4		—	7.12	19.3	**S10N06P51P**
3	0.75	22.5	62.4	24.7	68.7	—	—	13.5	37.5	—	—	**S10N04P76P**
3	0.75	—	—	—	—	19	53.1	—	—	10.7	29.3	**S10N06P76P**
3	1	30	83.3	33	91.7	—	—	18	50	—	—	**S10N04P01P**
3	1	—	—	—	—	25.5	70.8	—	—	14.2	39.5	**S10N06P01P**
3	1.5	45	125	49.5	137	—	—	27	75	—	—	**S10N04P16P**
3	1.5	—	—	—	—	38.2	106	—	—	21.4	59.3	**S10N06P16P**
3	2	60	167	66	183	—	—	361	100	—	—	**S10N04P02P**
3	2	—	—	—	—	51	142	—	—	28.5	79.2	**S10N06P02P**
3	3	90	249.9	99	275.1	—	—	54	150	—	—	**S10N04A03N**
3	3	—	—	—	—	76.5	212.4	—	—	46.2	118.5	**S10N06A03N**
3	5	150	416	165	458	—	—	90	250	—	—	**S10N04A05N**
3	5	—	—	—	—	127	354	—	—	71.2	198	**S10N06A05N**
3	7.5	225	624	274	687	—	—	135	375	—	—	**S10N04A07N**
3	7.5	—	—	—	—	190	531	—	—	107	293	**S10N06A07N**
Connection Diagram ②		M		M		M		N		N		

Notes

① Additional wiring trough may be required.

② Refer to **Page V2-T2-172** for buck-boost wiring diagrams.

Output voltage for lower input voltage can be found by: $\frac{\text{Rated Output Voltage}}{\text{Rated Input Voltage}}$ x Input Actual Voltage = Output New Voltage.

Output kVA available at reduced input voltage can be found by: $\frac{\text{Actual Input Voltage}}{\text{Rated Input Voltage}}$ x Output kVA = New kVA Rating.

Frame drawings/dimensions information begins on **Page V2-T2-216**.

WARNING! Three-phase autotransformers should never be used to obtain four-wire output with three-wire input. Four-wire output requires four-wire wye input.

Three-Phase Wye Connection 230 Volt Output Required, 60 Hz

		Input Available Voltage										
		183		192		199		208		218		
Units Required ①	Unit kVA	Output kVA	Amps	Output kVA	Amps	Output kVA	Amps	Output kVA	Amps	Output kVA	Amps	Catalog Number
3	0.05	—	—	0.83	2.08	—	—	1.65	4.58	1.66	4.17	**S10N04A81N**
3	0.05	0.62	1.56	—	—	0.54	1.35	—	—	—	—	**S10N06A81N**
3	0.10	—	—	1.66	4.17	—	—	3.3	9.17	3.32	8.35	**S10N04A82N**
3	0.10	1.25	3.12	—	—	1.08	2.71	—	—	—	—	**S10N06A82N**
3	0.15	—	—	2.49	6.25	—	—	4.95	13.7	4.98	12.5	**S10N04A83N**
3	0.15	1.87	4.69	—	—	1.62	4.06	—	—	—	—	**S10N06A83N**
3	0.25	—	—	4.15	10.4	—	—	8.2	22.9	8.3	20.9	**S10N04P26P**
3	0.25	3.11	7.81	—	—	2.70	6.77	—	—	—	—	**S10N06P26P**
3	0.50	—	—	8.3	20.8	—	—	16.5	45.8	16.6	41.7	**S10N04P51P**
3	0.50	6.22	15.6	—	—	5.39	13.5	—	—	—	—	**S10N06P51P**
3	0.75	—	—	12.4	31.2	—	—	24.7	68.8	24.9	62.6	**S10N04P76P**
3	0.75	9.33	23.4	—	—	8.09	20.3	—	—	—	—	**S10N06P76P**
3	1	—	—	16.6	41.7	—	—	33	91.7	33.2	83.5	**S10N04P01P**
3	1	12.5	31.2	—	—	10.8	27.1	—	—	—	—	**S10N06P01P**
3	1.5	—	—	24.9	62.5	—	—	49.5	137	49.8	125	**S10N04P16P**
3	1.5	18.7	46.9	—	—	16.2	40.6	—	—	—	—	**S10N06P16P**
3	2	—	—	33.2	83.3	—	—	66	183	66.4	167	**S10N04P02P**
3	2	24.9	62.5	—	—	21.6	54.2	—	—	—	—	**S10N06P02P**
3	3	—	—	49.8	125.1	—	—	99	275	99.6	250.5	**S10N04A03N**
3	3	37.5	93.6	—	—	32.4	81.3	—	—	—	—	**S10N06A03N**
3	5	—	—	83	208	—	—	165	458	166	417	**S10N04A05N**
3	5	62.2	156	—	—	53.9	135	—	—	—	—	**S10N06A05N**
3	7.5	—	—	124	312	—	—	247	688	249	626	**S10N04A07N**
3	7.5	93.3	234	—	—	80.9	203	—	—	—	—	**S10N06A07N**
Connection Diagram ②		N		N		S		M		Q		

Notes

① Additional wiring trough may be required.

② Refer to **Page V2-T2-172** for buck-boost wiring diagrams.

Output voltage for lower input voltage can be found by: $\frac{\text{Rated Output Voltage}}{\text{Rated Input Voltage}}$ x Input Actual Voltage = Output New Voltage.

Output kVA available at reduced input voltage can be found by: $\frac{\text{Actual Input Voltage}}{\text{Rated Input Voltage}}$ x Output kVA = New kVA Rating.

Frame drawings/dimensions information begins on **Page V2-T2-216**.

WARNING! Three-phase autotransformers should never be used to obtain four-wire output with three-wire input. Four-wire output requires four-wire wye input.

Three-Phase Wye Connection 230 Volt Output Required, 60 Hz

		Input Available Voltage										
		242		245		253		260		265		
Units Required ①	Unit kVA	Output kVA	Amps	Output kVA	Amps	Output kVA	Amps	Output kVA	Amps	Output kVA	Amps	Catalog Number
3	0.05	1.74	4.37	—	—	0.91	2.29	—	—	—	—	**S10N04A81N**
3	0.05	—	—	1.33	3.33	—	—	0.70	1.77	0.62	1.56	**S10N06A81N**
3	0.10	3.48	8.75	—	—	1.83	4.58	—	—	—	—	**S10N04A82N**
3	0.10	—	—	2.65	6.67	—	—	1.41	3.54	1.25	3.12	**S10N06A82N**
3	0.15	5.23	13.1	—	—	2.74	6.87	—	—	—	—	**S10N04A83N**
3	0.15	—	—	3.98	10.0	—	—	2.12	5.31	1.87	4.69	**S10N06A83N**
3	0.25	8.71	21.9	—	—	4.56	11.5	—	—	—	—	**S10N04P26P**
3	0.25	—	—	6.63	16.7	—	—	3.52	8.85	3.11	7.81	**S10N06P26P**
3	0.50	17.4	43.7	—	—	9.31	22.9	—	—	—	—	**S10N04P51P**
3	0.50	—	—	13.3	33.3	—	—	7.05	17.7	6.22	15.6	**S10N06P51P**
3	0.75	26.1	65.6	—	—	13.7	34.4	—	—	—	—	**S10N04P76P**
3	0.75	—	—	19.9	50	—	—	10.6	26.6	9.33	23.4	**S10N06P76P**
3	1	34.8	87.5	—	—	18.3	45.8	—	—	—	—	**S10N04P01P**
3	1	—	—	26.5	66.7	—	—	14.1	35.4	12.5	31.2	**S10N06P01P**
3	1.5	52.3	131	—	—	27.4	68.7	—	—	—	—	**S10N04P16P**
3	1.5	—	—	39.8	100	—	—	21.2	53.1	18.7	46.9	**S10N06P16P**
3	2	69.7	175	—	—	36.6	91.6	—	—	—	—	**S10N04P02P**
3	2	—	—	53.1	133	—	—	28.2	70.8	24.9	62.5	**S10N06P02P**
3	3	104.4	262.5	—	—	54.9	137.4	—	—	—	—	**S10N04A03N**
3	3	—	—	79.5	200	—	—	42.3	106.2	37.5	93.6	**S10N06A03N**
3	5	174	437	—	—	91.3	229	—	—	—	—	**S10N04A05N**
3	5	—	—	133	333	—	—	70.5	177	62.2	156	**S10N06A05N**
3	7.5	261	656	—	—	137	344		—	—	—	**S10N04A07N**
3	7.5	—	—	199	500	—	—	106	266	93.3	234	**S10N06A07N**
Connection Diagram ②		Q		Q		R		R		S		

Notes

① Additional wiring trough may be required.

② Refer to **Page V2-T2-172** for buck-boost wiring diagrams.

Output voltage for lower input voltage can be found by: $\frac{\text{Rated Output Voltage}}{\text{Rated Input Voltage}}$ x Input Actual Voltage = Output New Voltage.

Output kVA available at reduced input voltage can be found by: $\frac{\text{Actual Input Voltage}}{\text{Rated Input Voltage}}$ x Output kVA = New kVA Rating.

Frame drawings/dimensions information begins on **Page V2-T2-216**.

WARNING! Three-phase autotransformers should never be used to obtain four-wire output with three-wire input. Four-wire output requires four-wire wye input.

Three-Phase Wye Connection 240 Volt Output Required, 60 Hz

		Input Available Voltage										
		190		200		208		218		228		
Units Required ①	Unit kVA	Output kVA	Amps	Output kVA	Amps	Output kVA	Amps	Output kVA	Amps	Output kVA	Amps	Catalog Number
3	0.05	—	—	0.86	2.08	—	—	0.86	2.08	1.73	4.17	**S10N04A81N**
3	0.05	0.65	1.65	—	—	1.27	3.05	—	—	—	—	**S10N06A81N**
3	0.10	—	—	1.73	4.17	—	—	1.73	4.17	3.46	8.34	**S10N04A82N**
3	0.10	1.3	3.12	—	—	2.55	6.12	—	—	—	—	**S10N06A82N**
3	0.15	—	—	2.59	6.25	—	—	2.59	6.25	5.20	12.5	**S10N04A83N**
3	0.15	1.95	4.69	—	—	3.82	9.16	—	—	—	—	**S10N06A83N**
3	0.25	—	—	4.32	10.4	—	—	4.32	10.4	8.66	20.9	**S10N04P26P**
3	0.25	3.25	7.81	—	—	6.3	15.1	—	—	—	—	**S10N06P26P**
3	0.50	—	—	8.65	20.8	—	—	8.65	20.8	17.3	41.7	**S10N04P51P**
3	0.50	6.5	15.6	—	—	12.7	30.4	—	—	—	—	**S10N06P51P**
3	0.75	—	—	13	31.2	—	—	13	31.2	26	62.6	**S10N04P76P**
3	0.75	9.75	23.4	—	—	19.2	46	—	—	—	—	**S10N06P76P**
3	1	—	—	17.3	41.7	—	—	17.3	41.7	34.6	83.4	**S10N04P01P**
3	1	13	31.2	—	—	25.5	61.2	—	—	—	—	**S10N06P01P**
3	1.5	—	—	25.9	62.5	—	—	25.9	62.5	52	125	**S10N04P16P**
3	1.5	19.5	46.9	—	—	38.2	91.6	—	—	—	—	**S10N06P16P**
3	2	—	—	34.6	83.3	—	—	34.6	83.3	69.3	167	**S10N04P02P**
3	2	26	62.5	—	—	51	122.4	—	—	—	—	**S10N06P02P**
3	3	—	—	51.9	125.1	—	—	51.9	125.1	103.8	250.2	**S10N04A03N**
3	3	39	93.6	—	—	76.5	183.6	—	—	—	—	**S10N06A03N**
3	5	—	—	86.5	208	—	—	86.5	208	173	417	**S10N04A05N**
3	5	65	156	—	—	127.2	305.2	—	—	—	—	**S10N06A05N**
3	7.5	—	—	130	312	—	—	130	312	260	626	**S10N04A07N**
3	7.5	97.5	234	—	—	192	460	—	—	—	—	**S10N06A07N**
Connection Diagram ②		N		N		M		R		Q		

Notes

① Additional wiring trough may be required.

② Refer to **Page V2-T2-172** for buck-boost wiring diagrams.

Output voltage for lower input voltage can be found by: $\frac{\text{Rated Output Voltage}}{\text{Rated Input Voltage}}$ x Input Actual Voltage = Output New Voltage.

Output kVA available at reduced input voltage can be found by: $\frac{\text{Actual Input Voltage}}{\text{Rated Input Voltage}}$ x Output kVA = New kVA Rating.

Frame drawings/dimensions information begins on **Page V2-T2-216**.

WARNING! Three-phase autotransformers should never be used to obtain four-wire output with three-wire input. Four-wire output requires four-wire wye input.

Three-Phase Wye Connection 240 Volt Output Required, 60 Hz

		Input Available Voltage										
		252		256		264		272		277		
Units Required ①	Unit kVA	Output kVA	Amps	Output kVA	Amps	Output kVA	Amps	Output kVA	Amps	Output kVA	Amps	Catalog Number
3	0.05	1.85	4.37	—	—	0.95	2.29	—	—	—	—	**S10N04A81N**
3	0.05	—	—	1.39	3.33	—	—	0.74	1.77	0.65	1.56	**S10N06A81N**
3	0.10	3.64	8.75	—	—	1.91	4.58	—	—	—	—	**S10N04A82N**
3	0.10	—	—	2.77	6.67	—	—	1.47	3.54	1.3	3.12	**S10N06A82N**
3	0.15	5.46	13.1	—	—	2.86	6.87	—	—	—	—	**S10N04A83N**
3	0.15	—	—	4.16	10.0	—	—	2.21	5.31	1.95	4.69	**S10N06A83N**
3	0.25	9.09	21.9	—	—	4.76	11.5	—	—	—	—	**S10N04P26P**
3	0.25	—	—	6.93	16.7	—	—	3.68	8.85	3.25	7.81	**S10N06P26P**
3	0.50	18.2	43.7	—	—	9.53	22.9	—	—	—	—	**S10N04P51P**
3	0.50	—	—	13.9	33.3	—	—	7.36	17.7	6.5	15.6	**S10N06P51P**
3	0.75	27.3	65.6	—	—	14.3	34.4	—	—	—	—	**S10N04P76P**
3	0.75	—	—	20.8	50	—	—	11	26.6	9.75	23.4	**S10N06P76P**
3	1	36.4	87.5	—	—	19.1	45.8	—	—	—	—	**S10N04P01P**
3	1	—	—	27.7	66.7	—	—	14.7	35.4	13	31.2	**S10N06P01P**
3	1.5	54.6	131	—	—	28.6	68.7	—	—	—	—	**S10N04P16P**
3	1.5	—	—	41.6	100	—	—	22.1	53.1	19.5	46.9	**S10N06P16P**
3	2	72.8	175	—	—	38.1	91.7	—	—	—	—	**S10N04P02P**
3	2	—	—	55.4	133	—	—	29.5	70.8	26	62.5	**S10N06P02P**
3	3	109.2	262.5	—	—	57.3	137.4	—	—	—	—	**S10N04A03N**
3	3	—	—	83.1	200	—	—	44.1	106.2	39	93.6	**S10N06A03N**
3	5	182	437	—	—	95.3	229	—	—	—	—	**S10N04A05N**
3	5	—	—	139	333	—	—	73.6	177	65	156	**S10N06A05N**
3	7.5	273	656	—	—	143	344	—	—	—	—	**S10N04A07N**
3	7.5	—	—	208	500	—	—	110	266	97.5	234	**S10N06A07N**
Connection Diagram ②		Q		Q		R		R		S		

Notes

① Additional wiring trough may be required.

② Refer to **Page V2-T2-172** for buck-boost wiring diagrams.

Output voltage for lower input voltage can be found by: $\frac{\text{Rated Output Voltage}}{\text{Rated Input Voltage}}$ x Input Actual Voltage = Output New Voltage.

Output kVA available at reduced input voltage can be found by: $\frac{\text{Actual Input Voltage}}{\text{Rated Input Voltage}}$ x Output kVA = New kVA Rating.

Frame drawings/dimensions information begins on **Page V2-T2-216**.

WARNING! Three-phase autotransformers should never be used to obtain four-wire output with three-wire input. Four-wire output requires four-wire wye input.

Three-Phase Wye Connection 460 Volt Output Required, 60 Hz

		Input Available Voltage								
		406		418		432		438		
Units Required ①	Unit kVA	Output kVA	Amps	Output kVA	Amps	Output kVA	Amps	Output kVA	Amps	Catalog Number
3	0.05	—	—	1.66	2.08	—	—	3.22	4.04	**S10N04A81N**
3	0.05	1.25	1.57	—	—	2.49	3.12	—	—	**S10N06A81N**
3	0.10	—	—	3.31	4.15	—	—	6.62	8.31	**S10N04A82N**
3	0.10	2.49	3.12	—	—	4.97	6.24	—	—	**S10N06A82N**
3	0.15	—	—	4.97	6.24	—	—	9.94	12.48	**S10N04A83N**
3	0.15	3.73	4.68	—	—	7.46	9.36	—	—	**S10N06A83N**
3	0.25	—	—	8.28	10.39	—	—	16.6	20.84	**S10N04P26P**
3	0.25	6.22	7.81	—	—	12.4	15.56	—	—	**S10N06P26P**
3	0.50	—	—	16.6	20.84	—	—	33.2	41.67	**S10N04P51P**
3	0.50	12.5	15.69	—	—	24.69	31.25	—	—	**S10N06P51P**
3	0.75	—	—	24.8	31.12	—	—	49.6	62.25	**S10N04P76P**
3	0.75	18.7	23.47	—	—	37.3	46.82	—	—	**S10N06P76P**
3	1	—	—	33.1	41.54	—	—	66.2	83.09	**S10N04P01P**
3	1	24.9	31.25	—	—	49.7	62.38	—	—	**S10N06P01P**
3	1.5	—	—	49.7	62.38	—	—	99.4	124.75	**S10N04P16P**
3	1.5	37.3	46.94	—	—	74.6	93.63	—	—	**S10N06P16P**
3	2	—	—	66.3	83.22	—	—	133	166.93	**S10N04P02P**
3	2	49.7	62.38	—	—	99.5	124.88	—	—	**S10N06P02P**
3	3	—	—	99.3	124.64	—	—	198.6	249.27	**S10N04A03N**
3	3	74.6	93.63	—	—	149	187.01	—	—	**S10N06A03N**
3	5	—	—	166	208.35	—	—	322	404.16	**S10N04A05N**
3	5	125	156.89	—	—	249	312.53	—	—	**S10N06A05N**
3	7.5	—	—	248	311	—	—	496	622	**S10N04A07N**
3	7.5	187	235	—	—	373	468	—	—	**S10N06A07N**
Connection Diagram ②		R		R		Q		Q		

Notes

① Additional wiring trough may be required.

② Refer to **Page V2-T2-172** for buck-boost wiring diagrams.

Output voltage for lower input voltage can be found by: $\frac{\text{Rated Output Voltage}}{\text{Rated Input Voltage}}$ x Input Actual Voltage = Output New Voltage.

Output kVA available at reduced input voltage can be found by: $\frac{\text{Actual Input Voltage}}{\text{Rated Input Voltage}}$ x Output kVA = New kVA Rating.

Frame drawings/dimensions information begins on **Page V2-T2-216**.

WARNING! Three-phase autotransformers should never be used to obtain four-wire output with three-wire input. Four-wire output requires four-wire wye input.

Three-Phase Wye Connection 460 Volt Output Required, 60 Hz

		Input Available Voltage						
		424		436		450		
Units Required ①	Unit kVA	Output kVA	Amps	Output kVA	Amps	Output kVA	Amps	Catalog Number
3	0.05	—	1.7	2.1	—	—	—	**S10N04A81N**
3	0.05	1.3	1.56	—	—	2.6	3.13	**S10N06A81N**
3	0.10	—	—	3.5	4.2	—	—	**S10N04A82N**
3	0.10	2.6	3.12	—	—	5.2	6.25	**S10N06A82N**
3	0.15		—	5.2	6.25	—	—	**S10N04A83N**
3	0.15	3.9	4.68	—	—	7.8	9.38	**S10N06A83N**
3	0.25	—	—	8.7	10.4	—	—	**S10N04P26P**
3	0.25	6.5	7.82	—	—	13	15.6	**S10N06P26P**
3	0.50	—	—	17.4	20.9	—	—	**S10N04P51P**
3	0.50	13	15.6	—	—	26	31.2	**S10N06P51P**
3	0.75	—	—	26	31.2	—	—	**S10N04P76P**
3	0.75	19.5	23.4	—	—	39	46.9	**S10N06P76P**
3	1	—	—	35	42	—	—	**S10N04P01P**
3	1	26	31.2	—	—	52	62.5	**S10N06P01P**
3	1.5	—	—	52	62.5	—	—	**S10N04P16P**
3	1.5	39	46.8	—	—	78	93.8	**S10N06P16P**
3	2	—	—	69	82.9	—	—	**S10N04P02P**
3	2	52	62.5	—	—	104	125	**S10N06P02P**
3	3	—	—	104	125	—	—	**S10N04A03N**
3	3	78	93.8	—	—	156	187.6	**S10N06A03N**
3	5	—	—	174	209.2	—	—	**S10N04A05N**
3	5	130	156.3	—	—	260	312.7	**S10N06A05N**
3	7.5	—	—	260	312	—	—	**S10N04A07N**
3	7.5	195	234	—	—	390	469	**S10N06A07N**
Connection Diagram ②		R		R		Q		

Notes

① Additional wiring trough may be required.

② Refer to **Page V2-T2-172** for buck-boost wiring diagrams.

Output voltage for lower input voltage can be found by: $\frac{\text{Rated Output Voltage}}{\text{Rated Input Voltage}}$ x Input Actual Voltage = Output New Voltage.

Output kVA available at reduced input voltage can be found by: $\frac{\text{Actual Input Voltage}}{\text{Rated Input Voltage}}$ x Output kVA = New kVA Rating.

Frame drawings/dimensions information begins on **Page V2-T2-216**.

Single-Phase Required, 60 Hz

		Input Available Voltage/Output Voltage								
		200/240		230/277		346/380		362/380		
Units Required ①	Unit kVA	Output kVA	Amps	Output kVA	Amps	Output kVA	Amps	Output kVA	Amps	Catalog Number
1	0.25	1.25	5.2	1.44	5.2	1.98	5.2	3.95	10.4	**S20N08P26P**
1	0.50	2.50	10.4	2.88	10.4	3.95	10.4	7.90	20.8	**S20N08P51P**
1	0.75	3.75	15.6	4.32	15.6	5.93	15.6	11.9	31.2	**S20N08P76P**
1	1	5.00	20.8	5.76	20.8	7.90	20.8	15.8	41.6	**S20N08P01P**
1	1.5	7.50	31.2	8.64	31.2	11.9	31.2	23.8	62.5	**S20N08P16P**
1	2	10.0	41.6	11.5	41.6	15.8	41.6	31.6	83.3	**S20N08P02P**
1	3	15.0	62.5	17.3	62.5	23.8	62.5	47.5	125.0	**S20N08A03N**
1	5	25.0	104.0	28.8	104.0	39.5	104.0	79.0	208.0	**S20N08A05N**
1	7.5	37.5	156.0	43.2	156.0	59.3	156.0	118.6	312.0	**S20N08A07N**
Connection Diagram ②		B		B		F		E		

Single-Phase Required, 60 Hz

		Input Available Voltage/Output Voltage								
		378/416		416/457		436/480		458/480		
Units Required ①	Unit kVA	Output kVA	Amps	Output kVA	Amps	Output kVA	Amps	Output kVA	Amps	Catalog Number
1	0.25	2.16	5.2	2.38	5.2	2.50	5.2	4.99	10.4	**S20N08P26P**
1	0.50	4.33	10.4	4.76	10.4	4.99	10.4	9.98	20.8	**S20N08P51P**
1	0.75	6.49	15.6	7.14	15.6	7.49	15.6	15.0	31.2	**S20N08P76P**
1	1	8.65	20.8	9.52	20.8	9.98	20.8	20.0	41.6	**S20N08P01P**
1	1.5	13.0	31.2	14.3	31.2	15.0	31.2	30.0	62.5	**S20N08P16P**
1	2	17.3	41.6	19.0	41.6	20.0	41.6	40.0	83.3	**S20N08P02P**
1	3	26.0	62.5	28.6	62.5	30.0	62.5	60.0	125.0	**S20N08A03N**
1	5	43.3	104.0	47.6	104.0	49.9	104.0	99.8	208.0	**S20N08A05N**
1	7.5	64.9	156.0	71.4	156.0	74.9	156.0	149.8	312.0	**S20N08A07N**
Connection Diagram ②		F		F		F		E		

Notes

① Additional wiring trough may be required.

② Refer to **Page V2-T2-172** for buck-boost wiring diagrams.

Output voltage for lower input voltage can be found by: $\frac{\text{Rated Output Voltage}}{\text{Rated Input Voltage}}$ x Input Actual Voltage = Output New Voltage.

Output kVA available at reduced input voltage can be found by: $\frac{\text{Actual Input Voltage}}{\text{Rated Input Voltage}}$ x Output kVA = New kVA Rating.

Frame drawings/dimensions information begins on **Page V2-T2-216**.

Single-Phase Required, 60 Hz

		Input Available Voltage/Output Voltage								
		277/230		480/456		504/480		528/480		
Units Required ①	Unit kVA	Output kVA	Amps	Output kVA	Amps	Output kVA	Amps	Output kVA	Amps	Catalog Number
1	0.25	1.44	6.26	5.23	11.4	5.47	11.4	2.75	5.72	**S20N08P26P**
1	0.50	2.88	12.5	10.4	22.8	10.9	22.8	5.49	11.4	**S20N08P51P**
1	0.75	4.33	18.8	15.7	34.2	16.4	34.2	8.24	17.2	**S20N08P76P**
1	1	5.76	25.0	20.9	45.6	21.8	45.6	11.0	22.9	**S20N08P01P**
1	1.5	8.64	37.6	31.3	68.4	32.8	68.4	16.5	34.3	**S20N08P16P**
1	2	11.5	50.1	41.8	91.2	43.7	91.2	22.0	45.8	**S20N08P02P**
1	3	17.3	75.3	62.7	136.0	65.2	136.0	33.0	68.8	**S20N08A03N**
1	5	28.8	125.3	104.5	227.0	108.0	227.0	54.9	114.4	**S20N08A05N**
1	7.5	43.2	187.9	156.8	341.0	163.0	341.0	82.4	171.6	**S20N08A07N**
Connection Diagram ②		B		E		E		F		

Notes

① Additional wiring trough may be required.

② Refer to **Page V2-T2-172** for buck-boost wiring diagrams.

Output voltage for lower input voltage can be found by: $\frac{\text{Rated Output Voltage}}{\text{Rated Input Voltage}}$ x Input Actual Voltage = Output New Voltage.

Output kVA available at reduced input voltage can be found by: $\frac{\text{Actual Input Voltage}}{\text{Rated Input Voltage}}$ x Output kVA = New kVA Rating.

Frame drawings/dimensions information begins on **Page V2-T2-216**.

Three-Phase Required, 60 Hz

Unit kVA	Input Available Voltage/Output Voltage 362/380 Output kVA	Amps	346/416 Output kVA	Amps	430/473 Output kVA	Amps	400/480 Output kVA	Amps	436/480 Output kVA	Amps	Catalog Number
0.25	6.52	10.4	3.75	5.2	4.26	5.2	4.33	5.2	4.33	5.2	**S20N08P26P**
0.50	13.0	20.8	7.50	10.4	8.52	10.4	8.65	10.4	8.65	10.4	**S20N08P51P**
0.75	19.6	31.2	11.2	15.6	12.8	15.6	13.0	15.6	13.0	15.6	**S20N08P76P**
1	26.1	41.6	15.0	20.8	17.0	20.8	17.3	20.8	17.3	20.8	**S20N08P01P**
1.5	39.1	62.4	22.5	31.2	25.5	31.2	26.0	31.2	26.0	31.2	**S20N08P16P**
2	52.2	83.2	30.0	41.6	34.1	41.6	34.6	41.6	34.6	41.6	**S20N08P02P**
3	78.4	125.0	45.0	62.5	51.2	62.5	52.0	62.5	52.0	62.5	**S20N08A03N**
5	130.4	208.0	75.1	104.0	85.2	104.0	86.6	104.0	86.6	104.0	**S20N08A05N**
7.5	195.6	312.0	112.6	156.0	127.8	156.0	129.9	156.0	129.9	156.0	**S20N08A07N**
Connection Diagram ①	I		N		K		N		K		
Units Required ②	2		3		2		3		2		

Three-Phase Required, 60 Hz

Unit kVA	Input Available Voltage/Output Voltage 460/483 Output kVA	Amps	457/380 Output kVA	Amps	504/480 Output kVA	Amps	528/480 Output kVA	Amps	Catalog Number
0.25	8.7	10.4	4.12	6.25	9.08	10.9	4.76	5.72	**S20N08P26P**
0.50	17.4	20.8	8.23	12.5	18.2	21.8	9.51	11.4	**S20N08P51P**
0.75	26.1	31.2	12.3	18.8	27.2	32.8	14.3	17.2	**S20N08P76P**
1	34.8	41.6	16.5	25.0	36.3	43.7	19.0	22.9	**S20N08P01P**
1.5	52.2	62.4	24.7	37.5	54.5	65.5	28.5	34.3	**S20N08P16P**
2	69.6	83.2	32.9	50.0	72.6	87.4	38.0	45.8	**S20N08P02P**
3	104.6	125.0	49.5	75.2	109.7	131.3	57.2	68.8	**S20N08A03N**
5	174.0	208.0	82.3	125.1	181.6	218.4	95.1	114.4	**S20N08A05N**
7.5	261.0	312.0	123.5	187.6	272.4	327.6	142.7	171.6	**S20N08A07N**
Connection Diagram ①	I		N		I		K		
Units Required ②	2		3		2		2		

Notes

① Refer to **Page V2-T2-172** for buck-boost wiring diagrams.

② Additional wiring trough may be required.

Output voltage for lower input voltage can be found by: $\frac{\text{Rated Output Voltage}}{\text{Rated Input Voltage}}$ x Input Actual Voltage = Output New Voltage.

Output kVA available at reduced input voltage can be found by: $\frac{\text{Actual Input Voltage}}{\text{Rated Input Voltage}}$ x Output kVA = New kVA Rating.

Frame drawings/dimensions information begins on **Page V2-T2-216**.

Three-Phase Open Delta Connection 480 Volt Output Required, 60 Hz

	Input Available Voltage						
	600		575		575		
	Output		Output		Output		
Units Required ①	kVA	Amps	kVA	Amps	kVA	Amps	Catalog Number ②
2	4.3	5.1	—	—	—	—	**S20N11P51P**
2	—	—	—	—	4.1	4.9	**S60G11P51P**
2	6.5	7.8	—	—	—	—	**S20N11P76P**
2	—	—	—	—	6.2	7.4	**S60G11P76P**
2	8.6	10.3	—	—	—	—	**S20N11P01P**
2	—	—	—	—	8.3	9.9	**S60G11P01P**
2	13.0	15.6	—	—	—	—	**S20N11P16P**
2	—	—	—	—	12.4	14.9	**S60G11P16P**
2	17.2	20.6	—	—	—	—	**S20N11P02P**
2	—	—	—	—	16.5	19.8	**S60G11P02P**
2	25.8	31	—	—	—	—	**S20N11S03N**
2	—	—	—	—	24.8	29.8	**S60G11P03P**
2	43.2	51.9	—	—	—	—	**S20N11S05N**
2	—	—	—	—	41	49.3	**S60G11S05N**
2	65	78.1	—	—	—	—	**S20N11S07N**
2	—	—	—	—	62	74.5	**S60G11S07N**
2	86	103.4	—	—	—	—	**S20N11S10N**
2	—	—	83	99.8	—	—	**S60G11S10N**
2	130	156.3	—	—	—	—	**S20N11S15N**
2	—	—	124	149.1	—	—	**S60N11S15N**
2	216	259.8	—	—	—	—	**T20P11S25EE**
2	—	—	207	248.9	—	—	**S60J11S25N**
2	324	389.7	—	—	—	—	**T20P11S37EE**
2	432	519.6	—	—	—	—	**T20P11S50EE**
Connection Diagram ③	I		J		T		

Notes

① Additional wiring trough may be required.

② On transformers supplied with standard taps, taps must be placed at nominal settings.

③ Refer to **Page V2-T2-172** for buck-boost wiring diagrams.

Autotransformers can be used only where local electric codes permit and isolation of the two circuits is not required.

Output voltage for lower input voltage can be found by: $\frac{\text{Rated Output Voltage}}{\text{Rated Input Voltage}}$ x Input Actual Voltage = Output New Voltage.

Output kVA available at reduced input voltage can be found by: $\frac{\text{Actual Input Voltage}}{\text{Rated Input Voltage}}$ x Output kVA = New kVA Rating.

Frame drawings/dimensions information begins on **Page V2-T2-216**.

Single-Phase 480 Volt Output Required, 60 Hz

	Input Available Voltage						
	600		575		575		
	Output		Output		Output		
Units Required ①	kVA	Amps	kVA	Amps	kVA	Amps	Catalog Number ②
1	2.5	5.2	—	—	—	—	**S20N11P51P**
1	—	—	—	—	2.4	5	**S60G11P51P**
1	3.7	7.7	—	—	—	—	**S20N11P76P**
1	—	—	—	—	3.6	7.5	**S60G11P76P**
1	5.0	10.4	—	—	—	—	**S20N11P01P**
1	—	—	—	—	4.8	10	**S60G11P01P**
1	7.5	15.6	—	—	—	—	**S20N11P16P**
1	—	—	—	—	7.2	15	**S60G11P16P**
1	10	20.8	—	—	—	—	**S20N11P02P**
1	—	—	—	—	9.6	20	**S60G11P02P**
1	15	31.2	—	—	—	—	**S20N11S03N**
1	—	—	—	—	14.3	29.7	**S60G11P03P**
1	25	52	—	—	—	—	**S20N11S05N**
1	—	—	—	—	24	50	**S60G11S05N**
1	37.5	78.1	—	—	—	—	**S20N11S07N**
1	—	—	—	—	36	75	**S60G11S07N**
1	50	104.1	—	—	—	—	**S20N11S10N**
1	—	—	43	100	—	—	**S60G11S10N**
1	75	156.2	—	—	—	—	**S20N11S15N**
1	—	—	72	150	—	—	**S60N11S15N**
1	125	260.4	—	—	—	—	**T20P11S25EE**
1	—	—	120	250	—	—	**S60J11S25N**
1	187	389.6	—	—	—	—	**T20P11S37EE**
1	250	520.8	—	—	—	—	**T20P11S50EE**
Connection Diagram ③	E		H		U		

Notes

① Additional wiring trough may be required.
② On transformers supplied with standard taps, taps must be placed at nominal settings.
③ Refer to **Page V2-T2-172** for buck-boost wiring diagrams.

Autotransformers can be used only where local electric codes permit and isolation of the two circuits is not required.

Output voltage for lower input voltage can be found by: $\frac{\text{Rated Output Voltage}}{\text{Rated Input Voltage}}$ x Input Actual Voltage = Output New Voltage.

Output kVA available at reduced input voltage can be found by: $\frac{\text{Actual Input Voltage}}{\text{Rated Input Voltage}}$ x Output kVA = New kVA Rating.

Frame drawings/dimensions information begins on **Page V2-T2-216**.

Accessories

Please refer to Section 2.7 **Page V2-T2-191**.

Technical Data and Specifications

Frequency

Eaton buck-boost transformers are designed for 60 Hz operation.

Overload Capability

Short-term overload is designed into transformers as required by ANSI. Dry-type distribution transformers will deliver 200% nameplate load for one-half hour, 150% load for one hour, and 125% load for four hours without being damaged, provided that a constant 50% load precedes and follows the overload. See ANSI C57.96-01.250 for additional limitations.

Continuous overload capacity is not deliberately designed into a transformer because the design objective is to be within the allowed winding temperature rise with nameplate loading.

Insulation System and Temperature Rise

Industry standards classify insulation systems and rise as shown below:

Insulation System Classification

Ambient	+ Winding Rise	+ Hot Spot	= Temp. Class
40°C	55°C	10°C	105°C
40°C	80°C	30°C	150°C
25°C	135°C	20°C	180°C
40°C	115°C	30°C	185°C
40°C	150°C	30°C	220°C

The design life of transformers having different insulation systems is the same—the lower-temperature systems are designed for the same life as the higher-temperature systems.

Enclosures

Eaton encapsulated buck-boost transformers use a NEMA 3R rated enclosure.

Winding Terminations

Primary and secondary windings are terminated in the wiring compartment. Encapsulated units have copper leads or stabs brought out for connections. **Lugs are not supplied with these transformers.** Eaton recommends that external cables be rated 90°C (sized at 75°C ampacity) for encapsulated designs.

Series-Multiple Windings

Series-multiple windings consist of two similar coils in each winding that can be connected in series or parallel (multiple). Transformers with series-multiple windings are designated with an "x" or "/" between the voltage ratings, such as voltages of "120/240" or "240 x 480." If the series-multiple winding is designated by an "x," the winding can be connected only for a series or parallel. With the "/" designation, a mid-point also becomes available in addition to the series or parallel connection. As an example, a 120 x 240 winding can be connected for either 120 (parallel) or 240 (series), but a 120/240 winding can be connected for 120 (parallel), 240 (series) or 240 with a 120 mid-point.

Sound Levels

All Eaton 600 volt class general-purpose dry-type distribution transformers are designed to meet NEMA ST-20 sound levels listed here. These are the sound levels measured in a soundproof environment. Actual sound levels measured at an installation will likely be higher due to electrical connections and environmental conditions. Lower sound levels are available and should be specified when the transformer is going to be installed in an area where sound may be a concern.

For additional information, please refer to Section 2.7 **Page V2-T2-195**.

Note: When installation is to be made on a grounded system, consideration must be given to the resulting voltage. Thus, on a 208 grounded wye/120 system, the voltage can be boosted to 240 volts but the voltage to ground will be 139 volts. If 240/120 volts with a mid-point ground is needed, a standard two-winding transformer must be used.

The following formulas can be used to calculate specific requirements.

For single-phase:

$$\text{LOAD kVA} = \frac{\text{Load Voltage x Full Line Amperes}}{1000}$$

For three-phase:

$$\text{LOAD kVA} = \frac{\text{Line Load Voltage x 1.73 x Full Load Amperes}}{1000}$$

Average Sound Levels

NEMA ST-20 Average Sound Level, dB

Equivalent Winding kVA Range	Self-Cooled Ventilated (up to 1.2 kV) K-Factor 1, 4, 9	Self-Cooled Ventilated (up to 1.2 kV) K-Factor 13, 20	Encapsulated (up to 1.2 kV)
3.00 and below	40	40	45
3.01 to 9.00	40	40	45
9.01 to 15.00	45	45	50
15.01 to 30.00	45	45	50
30.01 to 50.00	45	48	50
50.01 to 75.00	50	53	55
75.01 to 112.50	50	53	55
112.51 to 150.00	50	53	55
150.01 to 225.00	55	58	57
225.01 to 300.00	55	58	57
300.01 to 500.00	60	63	59
500.01 to 700.00	62	65	61
700.01 to 1000.00	64	67	63
Greater than 1000	Consult factory	Consult factory	Consult factory

Wiring Diagrams

Buck-Boost Transformers Wiring Diagrams

Diagram A

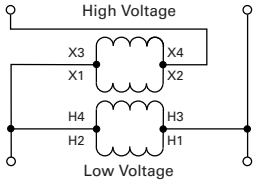

Diagram B

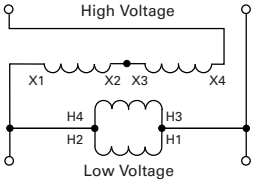

Diagram C

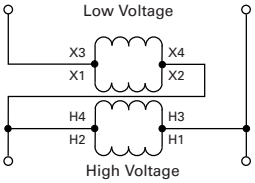

Diagram D

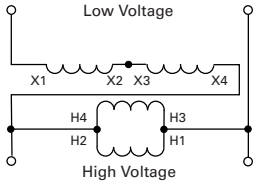

Diagram E

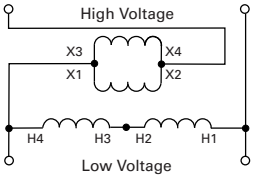

Diagram F

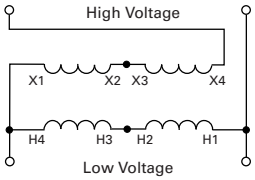

Diagram G

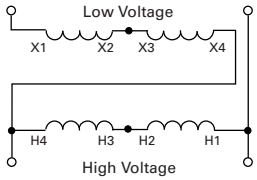

Diagram H

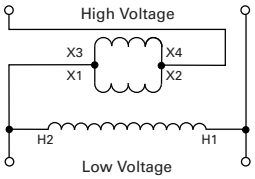

Diagram I

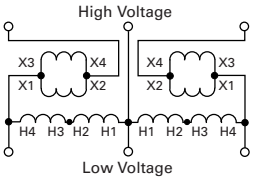

Diagram J

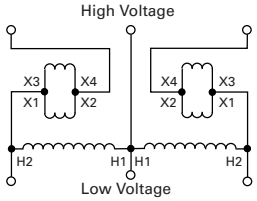

Diagram K

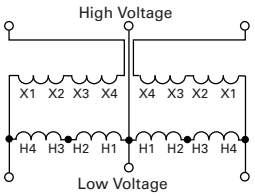

Diagram L

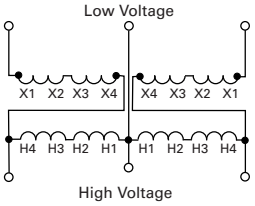

Diagram M ①

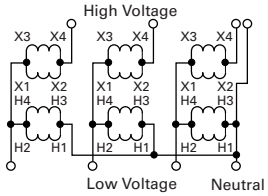

Diagram N ①

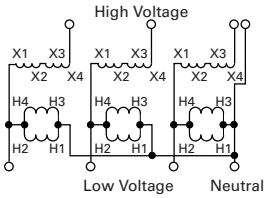

Diagram O ①

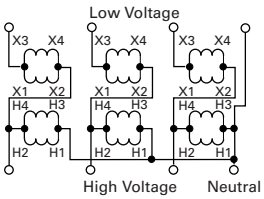

Diagram P ①

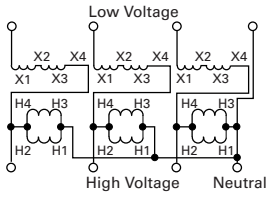

Diagram Q ①

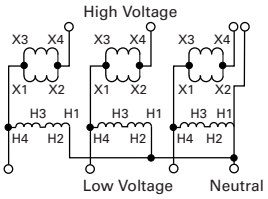

Diagram R ①

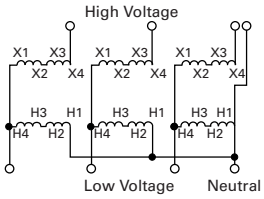

Diagram S ①

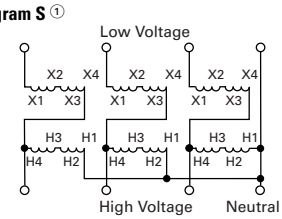

Diagram T

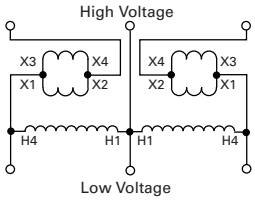

Diagram U

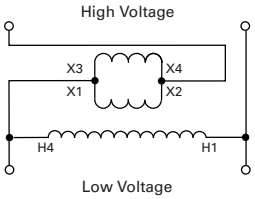

Note

① **WARNING!** If input is three-wire, "neutral" connection must be isolated and insulated! When used to supply a three-phase, four-wire load, the source must be three-phase, four-wire wye.

Contents

Description	*Page*
Motor Drive Isolation Transformers	**V2-T2-111**
Mini–Power Centers	**V2-T2-119**
Totally Enclosed Non-Ventilated Transformers	**V2-T2-124**
Class I, Division 2, Hazardous Location Transformers	**V2-T2-127**
Open-Type Core and Coil Assembly Transformers	**V2-T2-130**
Marine Duty Transformers	**V2-T2-133**
Buck-Boost and Low Voltage Lighting Transformers	**V2-T2-144**
Medium Voltage Distribution Transformers	
Features, Benefits and Functions	**V2-T2-174**
Standards and Certifications	**V2-T2-174**
Product Description	**V2-T2-175**

Medium Voltage Distribution Transformers

Product Description

Note: The following pages provide listings for most standard transformer ratings and catalog numbers. For other ratings or catalog numbers not shown, or for special enclosure types (including stainless steel), refer to Eaton.

Single- and Three-Phase

- Ventilated, NEMA 3R enclosure standard
- Suitable for indoor or outdoor applications
- Upright mounting only
- 220°C insulation system
- 150°C rise standard; 115°C or 80°C rise optional
- Available in single-phase ratings 15–333 kVA
- Available in single-phase ratings 25–167 kVA; in three-phase ratings 15–1500 kVA

Application Description

U.S. DOE 10 CFR Part 431 compliant energy-efficient transformers are specifically designed to meet the energy efficiency standards set forth in U.S. DOE 10 CFR Part 431. Compliant transformers are optimized to offer maximum efficiency at 50% of nameplate rating.

Transformers that are currently specifically excluded from the scope of DOE 10 CFR Part 431 include:

- Liquid-filled transformers below 10 kVA
- Dry-type transformers below 15 kVA
- AC and DC drives transformers
- Rectifier transformers designed for high harmonics
- Autotransformers
- Non-distribution transformers, such as UPS transformers
- Special impedance or regulation transformers
- Regulating transformers
- Sealed and non-ventilated transformers
- Machine tool transformers
- Welding transformers
- Transformers with tap ranges greater than 15%
- Transformers with a frequency other than 60 Hz
- Grounding transformers
- Testing transformers

DOE 10 CFR Part 431 Efficiency Levels

Tables of Energy Efficiency Dry-Type Distribution Transformers—20–45 kV BIL

Single-Phase		Three-Phase	
kVA	**Efficiency**	**kVA**	**Efficiency**
15	98.10	15	97.50
25	98.33	30	97.90
37.5	98.49	45	98.10
50	98.60	75	98.33
75	98.73	112.5	98.49
100	98.82	150	98.60
167	98.96	225	98.73
250	99.07	300	98.82
333	99.14	500	98.96
—	—	750	99.07
—	—	1000	99.14
—	—	1500	99.22

Features, Benefits and Functions

- 60 Hz operation (except as noted)
- Short-term overload capability as required by ANSI
- Meet NEMA ST-20 sound levels
- Meet federal energy efficiency requirements for dry-type transformers effective as of January 1, 2010

Standards and Certifications

- UL listed

Listed

Industry Standards

All Eaton dry-type distribution and control transformers are built and tested in accordance with applicable NEMA, ANSI and IEEE Standards.

Seismically Qualified

Eaton manufactured dry-type distribution transformers are seismically qualified and exceed requirements of the International Building Code (IBC) and California Code Title 24.

Product Description

Single-Phase—2010 Energy-Efficient

2400 Volts to 120/240 Volts—Aluminum Windings

kVA	Full Capacity Taps FCAN	FCBN	°C Temp. Rise	Frame	Wiring Diagram Number	Weight Lbs (kg)	Weathershield	Catalog Number
25	2 at +2.5%	2 at –2.5%	150	NH6	—	—	Included	**T42D11S25E3R**
37.5	2 at +2.5%	2 at –2.5%	150	NH3	—	—	Included	**T42D11S37E3R**
50	2 at +2.5%	2 at –2.5%	150	NH3	—	—	Included	**T42D11S50E3R**
75	2 at +2.5%	2 at –2.5%	150	NH3	—	—	Included	**T42D11S75E3R**
100	2 at +2.5%	2 at –2.5%	150	NH4	—	—	Included	**T42D11S99E3R**
167	2 at +2.5%	2 at –2.5%	150	NJ1	—	—	Included	**T42D11S67E3R**
25	2 at +2.5%	2 at –2.5%	115	NH6	—	—	Included	**T42D11F25E3R**
37.5	2 at +2.5%	2 at –2.5%	115	NH3	—	—	Included	**T42D11F37E3R**
50	2 at +2.5%	2 at –2.5%	115	NH3	—	—	Included	**T42D11F50E3R**
75	2 at +2.5%	2 at –2.5%	115	NH3	—	—	Included	**T42D11F75E3R**
100	2 at +2.5%	2 at –2.5%	115	NH4	—	—	Included	**T42D11F99E3R**
167	2 at +2.5%	2 at –2.5%	115	NJ1	—	—	Included	**T42D11F67E3R**
25	2 at +2.5%	2 at –2.5%	80	NH3	—	—	Included	**T42D11B25E3R**
37.5	2 at +2.5%	2 at –2.5%	80	NH3	—	—	Included	**T42D11B37E3R**
50	2 at +2.5%	2 at –2.5%	80	NH3	—	—	Included	**T42D11B50E3R**
75	2 at +2.5%	2 at –2.5%	80	NH4	—	—	Included	**T42D11B75E3R**
100	2 at +2.5%	2 at –2.5%	80	NJ1	—	—	Included	**T42D11B99E3R**
167	2 at +2.5%	2 at –2.5%	80	NJ1	—	—	Included	**T42D11B67E3R**

4160 Volts to 120/240 Volts—Aluminum Windings

kVA	Full Capacity Taps FCAN	FCBN	°C Temp. Rise	Frame	Wiring Diagram Number	Weight Lbs (kg)	Weathershield	Catalog Number
25	2 at +2.5%	2 at –2.5%	150	NH6	—	—	Included	**T46D11S25E3R**
37.5	2 at +2.5%	2 at –2.5%	150	NH3	—	—	Included	**T46D11S37E3R**
50	2 at +2.5%	2 at –2.5%	150	NH3	—	—	Included	**T46D11S50E3R**
75	2 at +2.5%	2 at –2.5%	150	NH3	—	—	Included	**T46D11S75E3R**
100	2 at +2.5%	2 at –2.5%	150	NH4	—	—	Included	**T46D11S99E3R**
167	2 at +2.5%	2 at –2.5%	150	NJ1	—	—	Included	**T46D11S67E3R**
25	2 at +2.5%	2 at –2.5%	115	NH6	—	—	Included	**T46D11F25E3R**
37.5	2 at +2.5%	2 at –2.5%	115	NH3	—	—	Included	**T46D11F37E3R**
50	2 at +2.5%	2 at –2.5%	115	NH3	—	—	Included	**T46D11F50E3R**
75	2 at +2.5%	2 at –2.5%	115	NH3	—	—	Included	**T46D11F75E3R**
100	2 at +2.5%	2 at –2.5%	115	NH4	—	—	Included	**T46D11F99E3R**
167	2 at +2.5%	2 at –2.5%	115	NJ1	—	—	Included	**T46D11F67E3R**
25	2 at +2.5%	2 at –2.5%	80	NH3	—	—	Included	**T46D11B25E3R**
37.5	2 at +2.5%	2 at –2.5%	80	NH3	—	—	Included	**T46D11B37E3R**
50	2 at +2.5%	2 at –2.5%	80	NH3	—	—	Included	**T46D11B50E3R**
75	2 at +2.5%	2 at –2.5%	80	NH4	—	—	Included	**T46D11B75E3R**
100	2 at +2.5%	2 at –2.5%	80	NJ1	—	—	Included	**T46D11B99E3R**
167	2 at +2.5%	2 at –2.5%	80	NJ1	—	—	Included	**T46D11B67E3R**

Note

Contact your local Eaton sales office for CE Mark transformer requirements. For other ratings or catalog numbers not shown, or for special enclosure types (including stainless steel), refer to Eaton. Frame drawings/dimensions information begins on **Page V2-T2-216**.

Single-Phase—2010 Energy-Efficient

2400 Volts to 120/240 Volts—Copper Windings

kVA	Full Capacity Taps FCAN	FCBN	°C Temp. Rise	Frame	Wiring Diagram Number	Weight Lbs (kg)	Weathershield	Catalog Number
25	2 at +2.5%	2 at –2.5%	150	NH6	—	—	Included	**T42D11S25CUE3R**
37.5	2 at +2.5%	2 at –2.5%	150	NH3	—	—	Included	**T42D11S37CUE3R**
50	2 at +2.5%	2 at –2.5%	150	NH3	—	—	Included	**T42D11S50CUE3R**
75	2 at +2.5%	2 at –2.5%	150	NH3	—	—	Included	**T42D11S75CUE3R**
100	2 at +2.5%	2 at –2.5%	150	NH4	—	—	Included	**T42D11S99CUE3R**
167	2 at +2.5%	2 at –2.5%	150	NJ1	—	—	Included	**T42D11S67CUE3R**
25	2 at +2.5%	2 at –2.5%	115	NH6	—	—	Included	**T42D11F25CUE3R**
37.5	2 at +2.5%	2 at –2.5%	115	NH3	—	—	Included	**T42D11F37CUE3R**
50	2 at +2.5%	2 at –2.5%	115	NH3	—	—	Included	**T42D11F50CUE3R**
75	2 at +2.5%	2 at –2.5%	115	NH3	—	—	Included	**T42D11F75CUE3R**
100	2 at +2.5%	2 at –2.5%	115	NH4	—	—	Included	**T42D11F99CUE3R**
167	2 at +2.5%	2 at –2.5%	115	NJ1	—	—	Included	**T42D11F67CUE3R**
25	2 at +2.5%	2 at –2.5%	80	NH3	—	—	Included	**T42D11B25CUE3R**
37.5	2 at +2.5%	2 at –2.5%	80	NH3	—	—	Included	**T42D11B37CUE3R**
50	2 at +2.5%	2 at –2.5%	80	NH3	—	—	Included	**T42D11B50CUE3R**
75	2 at +2.5%	2 at –2.5%	80	NH4	—	—	Included	**T42D11B75CUE3R**
100	2 at +2.5%	2 at –2.5%	80	NJ1	—	—	Included	**T42D11B99CUE3R**
167	2 at +2.5%	2 at –2.5%	80	NJ1	—	—	Included	**T42D11B67CUE3R**

4160 Volts to 120/240 Volts—Copper Windings

kVA	Full Capacity Taps FCAN	FCBN	°C Temp. Rise	Frame	Wiring Diagram Number	Weight Lbs (kg)	Weathershield	Catalog Number
25	2 at +2.5%	2 at –2.5%	150	NH6	—	—	Included	**T46D11S25CUE3R**
37.5	2 at +2.5%	2 at –2.5%	150	NH3	—	—	Included	**T46D11S37CUE3R**
50	2 at +2.5%	2 at –2.5%	150	NH3	—	—	Included	**T46D11S50CUE3R**
75	2 at +2.5%	2 at –2.5%	150	NH3	—	—	Included	**T46D11S75CUE3R**
100	2 at +2.5%	2 at –2.5%	150	NH4	—	—	Included	**T46D11S99CUE3R**
167	2 at +2.5%	2 at –2.5%	150	NJ1	—	—	Included	**T46D11S67CUE3R**
25	2 at +2.5%	2 at –2.5%	115	NH6	—	—	Included	**T46D11F25CUE3R**
37.5	2 at +2.5%	2 at –2.5%	115	NH3	—	—	Included	**T46D11F37CUE3R**
50	2 at +2.5%	2 at –2.5%	115	NH3	—	—	Included	**T46D11F50CUE3R**
75	2 at +2.5%	2 at –2.5%	115	NH3	—	—	Included	**T46D11F75CUE3R**
100	2 at +2.5%	2 at –2.5%	115	NH4	—	—	Included	**T46D11F99CUE3R**
167	2 at +2.5%	2 at –2.5%	115	NJ1	—	—	Included	**T46D11F67CUE3R**
25	2 at +2.5%	2 at –2.5%	80	NH3	—	—	Included	**T46D11B25CUE3R**
37.5	2 at +2.5%	2 at –2.5%	80	NH3	—	—	Included	**T46D11B37CUE3R**
50	2 at +2.5%	2 at –2.5%	80	NH3	—	—	Included	**T46D11B50CUE3R**
75	2 at +2.5%	2 at –2.5%	80	NH4	—	—	Included	**T46D11B75CUE3R**
100	2 at +2.5%	2 at –2.5%	80	NJ1	—	—	Included	**T46D11B99CUE3R**
167	2 at +2.5%	2 at –2.5%	80	NJ1	—	—	Included	**T46D11B67CUE3R**

Note

Contact your local Eaton sales office for CE Mark transformer requirements. For other ratings or catalog numbers not shown, or for special enclosure types (including stainless steel), refer to Eaton. Frame drawings/dimensions information begins on **Page V2-T2-216**.

Three-Phase—2010 Energy-Efficient

2400 Delta Volts to 480Y/277 Volts—Copper Windings

kVA	Full Capacity Taps FCAN	FCBN	°C Temp. Rise	Frame	Wiring Diagram Number	Weight Lbs (kg)	Weathershield	Catalog Number
45	2 at +2.5%	2 at –2.5%	150	NH3	—	—	Included	**V42D47T45CUE3R**
75	2 at +2.5%	2 at –2.5%	150	NH4	—	—	Included	**V42D47T75CUE3R**
112.5	2 at +2.5%	2 at –2.5%	150	NH4	—	—	Included	**V42D47T12CUE3R**
150	2 at +2.5%	2 at –2.5%	150	NJ1	—	—	Included	**V42D47T49CUE3R**
225	2 at +2.5%	2 at –2.5%	150	NJ1	—	—	Included	**V42D47T22CUE3R**
300	2 at +2.5%	2 at –2.5%	150	NJ1	—	—	Included	**V42D47T33CUE3R**
500	2 at +2.5%	2 at –2.5%	150	NJ2	—	—	Included	**V42D47T55CUE3R**
750	2 at +2.5%	2 at –2.5%	150	NJ3	—	—	Included	**V42D47T77CUE3R**
45	2 at +2.5%	2 at –2.5%	115	NH3	—	—	Included	**V42D47F45CUE3R**
75	2 at +2.5%	2 at –2.5%	115	NH4	—	—	Included	**V42D47F75CUE3R**
112.5	2 at +2.5%	2 at –2.5%	115	NH4	—	—	Included	**V42D47F12CUE3R**
150	2 at +2.5%	2 at –2.5%	115	NJ1	—	—	Included	**V42D47F49CUE3R**
225	2 at +2.5%	2 at –2.5%	115	NJ1	—	—	Included	**V42D47F22CUE3R**
300	2 at +2.5%	2 at –2.5%	115	NJ1	—	—	Included	**V42D47F33CUE3R**
500	2 at +2.5%	2 at –2.5%	115	NJ2	—	—	Included	**V42D47F55CUE3R**
750	2 at +2.5%	2 at –2.5%	115	NJ3	—	—	Included	**V42D47F77CUE3R**
45	2 at +2.5%	2 at –2.5%	80	NH4	—	—	Included	**V42D47B45CUE3R**
75	2 at +2.5%	2 at –2.5%	80	NH4	—	—	Included	**V42D47B75CUE3R**
112.5	2 at +2.5%	2 at –2.5%	80	NJ1	—	—	Included	**V42D47B12CUE3R**
150	2 at +2.5%	2 at –2.5%	80	NJ1	—	—	Included	**V42D47B49CUE3R**
225	2 at +2.5%	2 at –2.5%	80	NJ1	—	—	Included	**V42D47B22CUE3R**
300	2 at +2.5%	2 at –2.5%	80	NJ2	—	—	Included	**V42D47B33CUE3R**
500	2 at +2.5%	2 at –2.5%	80	NJ3	—	—	Included	**V42D47B55CUE3R**
750	2 at +2.5%	2 at –2.5%	80	NJ3	—	—	Included	**V42D47B77CUE3R**

Note

Contact your local Eaton sales office for CE Mark transformer requirements. For other ratings or catalog numbers not shown, or for special enclosure types (including stainless steel), refer to Eaton. Frame drawings/dimensions information begins on **Page V2-T2-216**.

Three-Phase—2010 Energy-Efficient

4160 Delta Volts to 480Y/277 Volts—Copper Windings

kVA	Full Capacity Taps FCAN	FCBN	°C Temp. Rise	Frame	Wiring Diagram Number	Weight Lbs (kg)	Weathershield	Catalog Number
45	2 at +2.5%	2 at –2.5%	150	NH3	—	—	Included	**V46D47T45CUE3R**
75	2 at +2.5%	2 at –2.5%	150	NH4	—	—	Included	**V46D47T75CUE3R**
112.5	2 at +2.5%	2 at –2.5%	150	NH4	—	—	Included	**V46D47T12CUE3R**
150	2 at +2.5%	2 at –2.5%	150	NJ1	—	—	Included	**V46D47T49CUE3R**
225	2 at +2.5%	2 at –2.5%	150	NJ1	—	—	Included	**V46D47T22CUE3R**
300	2 at +2.5%	2 at –2.5%	150	NJ1	—	—	Included	**V46D47T33CUE3R**
500	2 at +2.5%	2 at –2.5%	150	NJ2	—	—	Included	**V46D47T55CUE3R**
750	2 at +2.5%	2 at –2.5%	150	NJ3	—	—	Included	**V46D47T77CUE3R**
45	2 at +2.5%	2 at –2.5%	115	NH3	—	—	Included	**V46D47F45CUE3R**
75	2 at +2.5%	2 at –2.5%	115	NH4	—	—	Included	**V46D47F75CUE3R**
112.5	2 at +2.5%	2 at –2.5%	115	NH4	—	—	Included	**V46D47F12CUE3R**
150	2 at +2.5%	2 at –2.5%	115	NJ1	—	—	Included	**V46D47F49CUE3R**
225	2 at +2.5%	2 at –2.5%	115	NJ1	—	—	Included	**V46D47F22CUE3R**
300	2 at +2.5%	2 at –2.5%	115	NJ1	—	—	Included	**V46D47F33CUE3R**
500	2 at +2.5%	2 at –2.5%	115	NJ2	—	—	Included	**V46D47F55CUE3R**
750	2 at +2.5%	2 at –2.5%	115	NJ3	—	—	Included	**V46D47F77CUE3R**
45	2 at +2.5%	2 at –2.5%	80	NH4	—	—	Included	**V46D47B45CUE3R**
75	2 at +2.5%	2 at –2.5%	80	NH4	—	—	Included	**V46D47B75CUE3R**
112.5	2 at +2.5%	2 at –2.5%	80	NJ1	—	—	Included	**V46D47B12CUE3R**
150	2 at +2.5%	2 at –2.5%	80	NJ1	—	—	Included	**V46D47B49CUE3R**
225	2 at +2.5%	2 at –2.5%	80	NJ1	—	—	Included	**V46D47B22CUE3R**
300	2 at +2.5%	2 at –2.5%	80	NJ2	—	—	Included	**V46D47B33CUE3R**
500	2 at +2.5%	2 at –2.5%	80	NJ3	—	—	Included	**V46D47B55CUE3R**
750	2 at +2.5%	2 at –2.5%	80	NJ3	—	—	Included	**V46D47B77CUE3R**

Note

Contact your local Eaton sales office for CE Mark transformer requirements. For other ratings or catalog numbers not shown, or for special enclosure types (including stainless steel), refer to Eaton. Frame drawings/dimensions information begins on **Page V2-T2-216**.

Three-Phase—2010 Energy-Efficient

2400 Delta Volts to 208Y/120 Volts—Copper Windings

kVA	Full Capacity Taps FCAN	FCBN	°C Temp. Rise	Frame	Wiring Diagram Number	Weight Lbs (kg)	Weathershield	Catalog Number
45	2 at +2.5%	2 at –2.5%	150	NH3	—	—	Included	**V42D28T45CUE3R**
75	2 at +2.5%	2 at –2.5%	150	NH4	—	—	Included	**V42D28T75CUE3R**
112.5	2 at +2.5%	2 at –2.5%	150	NH4	—	—	Included	**V42D28T12CUE3R**
150	2 at +2.5%	2 at –2.5%	150	NJ1	—	—	Included	**V42D28T49CUE3R**
225	2 at +2.5%	2 at –2.5%	150	NJ1	—	—	Included	**V42D28T22CUE3R**
300	2 at +2.5%	2 at –2.5%	150	NJ1	—	—	Included	**V42D28T33CUE3R**
500	2 at +2.5%	2 at –2.5%	150	NJ2	—	—	Included	**V42D28T55CUE3R**
750	2 at +2.5%	2 at –2.5%	150	NJ3	—	—	Included	**V42D28T77CUE3R**
45	2 at +2.5%	2 at –2.5%	115	NH3	—	—	Included	**V42D28F45CUE3R**
75	2 at +2.5%	2 at –2.5%	115	NH4	—	—	Included	**V42D28F75CUE3R**
112.5	2 at +2.5%	2 at –2.5%	115	NH4	—	—	Included	**V42D28F12CUE3R**
150	2 at +2.5%	2 at –2.5%	115	NJ1	—	—	Included	**V42D28F49CUE3R**
225	2 at +2.5%	2 at –2.5%	115	NJ1	—	—	Included	**V42D28F22CUE3R**
300	2 at +2.5%	2 at –2.5%	115	NJ1	—	—	Included	**V42D28F33CUE3R**
500	2 at +2.5%	2 at –2.5%	115	NJ2	—	—	Included	**V42D28F55CUE3R**
750	2 at +2.5%	2 at –2.5%	115	NJ3	—	—	Included	**V42D28F77CUE3R**
45	2 at +2.5%	2 at –2.5%	80	NH4	—	—	Included	**V42D28B45CUE3R**
75	2 at +2.5%	2 at –2.5%	80	NH4	—	—	Included	**V42D28B75CUE3R**
112.5	2 at +2.5%	2 at –2.5%	80	NJ1	—	—	Included	**V42D28B12CUE3R**
150	2 at +2.5%	2 at –2.5%	80	NJ1	—	—	Included	**V42D28B49CUE3R**
225	2 at +2.5%	2 at –2.5%	80	NJ1	—	—	Included	**V42D28B22CUE3R**
300	2 at +2.5%	2 at –2.5%	80	NJ2	—	—	Included	**V42D28B33CUE3R**
500	2 at +2.5%	2 at –2.5%	80	NJ3	—	—	Included	**V42D28B55CUE3R**
750	2 at +2.5%	2 at –2.5%	80	NJ3	—	—	Included	**V42D28B77CUE3R**

Note

Contact your local Eaton sales office for CE Mark transformer requirements. For other ratings or catalog numbers not shown, or for special enclosure types (including stainless steel), refer to Eaton. Frame drawings/dimensions information begins on **Page V2-T2-216**.

Three-Phase—2010 Energy-Efficient

4160 Delta Volts to 208Y/120 Volts—Copper Windings

kVA	Full Capacity Taps FCAN	FCBN	°C Temp. Rise	Frame	Wiring Diagram Number	Weight Lbs (kg)	Weathershield	Catalog Number
45	2 at +2.5%	2 at –2.5%	150	NH3	—	—	Included	**V46D28T45CUE3R**
75	2 at +2.5%	2 at –2.5%	150	NH4	—	—	Included	**V46D28T75CUE3R**
112.5	2 at +2.5%	2 at –2.5%	150	NH4	—	—	Included	**V46D28T12CUE3R**
150	2 at +2.5%	2 at –2.5%	150	NJ1	—	—	Included	**V46D28T49CUE3R**
225	2 at +2.5%	2 at –2.5%	150	NJ1	—	—	Included	**V46D28T22CUE3R**
300	2 at +2.5%	2 at –2.5%	150	NJ1	—	—	Included	**V46D28T33CUE3R**
500	2 at +2.5%	2 at –2.5%	150	NJ2	—	—	Included	**V46D28T55CUE3R**
750	2 at +2.5%	2 at –2.5%	150	NJ3	—	—	Included	**V46D28T77CUE3R**
45	2 at +2.5%	2 at –2.5%	115	NH3	—	—	Included	**V46D28F45CUE3R**
75	2 at +2.5%	2 at –2.5%	115	NH4	—	—	Included	**V46D28F75CUE3R**
112.5	2 at +2.5%	2 at –2.5%	115	NH4	—	—	Included	**V46D28F12CUE3R**
150	2 at +2.5%	2 at –2.5%	115	NJ1	—	—	Included	**V46D28F49CUE3R**
225	2 at +2.5%	2 at –2.5%	115	NJ1	—	—	Included	**V46D28F22CUE3R**
300	2 at +2.5%	2 at –2.5%	115	NJ1	—	—	Included	**V46D28F33CUE3R**
500	2 at +2.5%	2 at –2.5%	115	NJ2	—	—	Included	**V46D28F55CUE3R**
750	2 at +2.5%	2 at –2.5%	115	NJ3	—	—	Included	**V46D28F77CUE3R**
45	2 at +2.5%	2 at –2.5%	80	NH4	—	—	Included	**V46D28B45CUE3R**
75	2 at +2.5%	2 at –2.5%	80	NH4	—	—	Included	**V46D28B75CUE3R**
112.5	2 at +2.5%	2 at –2.5%	80	NJ1	—	—	Included	**V46D28B12CUE3R**
150	2 at +2.5%	2 at –2.5%	80	NJ1	—	—	Included	**V46D28B49CUE3R**
225	2 at +2.5%	2 at –2.5%	80	NJ1	—	—	Included	**V46D28B22CUE3R**
300	2 at +2.5%	2 at –2.5%	80	NJ2	—	—	Included	**V46D28B33CUE3R**
500	2 at +2.5%	2 at –2.5%	80	NJ3	—	—	Included	**V46D28B55CUE3R**
750	2 at +2.5%	2 at –2.5%	80	NJ3	—	—	Included	**V46D28B77CUE3R**

Note

Contact your local Eaton sales office for CE Mark transformer requirements. For other ratings or catalog numbers not shown, or for special enclosure types (including stainless steel), refer to Eaton. Frame drawings/dimensions information begins on **Page V2-T2-216**.

Three-Phase—2010 Energy-Efficient

2400 Delta Volts to 480Y/277 Volts—Aluminum Windings

kVA	Full Capacity Taps FCAN	FCBN	°C Temp. Rise	Frame	Wiring Diagram Number	Weight Lbs (kg)	Weathershield	Catalog Number
45	2 at +2.5%	2 at –2.5%	150	NH3	—	—	Included	**V42D47T45E3R**
75	2 at +2.5%	2 at –2.5%	150	NH4	—	—	Included	**V42D47T75E3R**
112.5	2 at +2.5%	2 at –2.5%	150	NH4	—	—	Included	**V42D47T12E3R**
150	2 at +2.5%	2 at –2.5%	150	NJ1	—	—	Included	**V42D47T49E3R**
225	2 at +2.5%	2 at –2.5%	150	NJ1	—	—	Included	**V42D47T22E3R**
300	2 at +2.5%	2 at –2.5%	150	NJ1	—	—	Included	**V42D47T33E3R**
500	2 at +2.5%	2 at –2.5%	150	NJ2	—	—	Included	**V42D47T55E3R**
750	2 at +2.5%	2 at –2.5%	150	NJ3	—	—	Included	**V42D47T77E3R**
45	2 at +2.5%	2 at –2.5%	115	NH3	—	—	Included	**V42D47F45E3R**
75	2 at +2.5%	2 at –2.5%	115	NH4	—	—	Included	**V42D47F75E3R**
112.5	2 at +2.5%	2 at –2.5%	115	NH4	—	—	Included	**V42D47F12E3R**
150	2 at +2.5%	2 at –2.5%	115	NJ1	—	—	Included	**V42D47F49E3R**
225	2 at +2.5%	2 at –2.5%	115	NJ1	—	—	Included	**V42D47F22E3R**
300	2 at +2.5%	2 at –2.5%	115	NJ1	—	—	Included	**V42D47F33E3R**
500	2 at +2.5%	2 at –2.5%	115	NJ2	—	—	Included	**V42D47F55E3R**
750	2 at +2.5%	2 at –2.5%	115	NJ3	—	—	Included	**V42D47F77E3R**
45	2 at +2.5%	2 at –2.5%	80	NH4	—	—	Included	**V42D47B45E3R**
75	2 at +2.5%	2 at –2.5%	80	NH4	—	—	Included	**V42D47B75E3R**
112.5	2 at +2.5%	2 at –2.5%	80	NJ1	—	—	Included	**V42D47B12E3R**
150	2 at +2.5%	2 at –2.5%	80	NJ1	—	—	Included	**V42D47B49E3R**
225	2 at +2.5%	2 at –2.5%	80	NJ1	—	—	Included	**V42D47B22E3R**
300	2 at +2.5%	2 at –2.5%	80	NJ2	—	—	Included	**V42D47B33E3R**
500	2 at +2.5%	2 at –2.5%	80	NJ3	—	—	Included	**V42D47B55E3R**
750	2 at +2.5%	2 at –2.5%	80	NJ3	—	—	Included	**V42D47B77E3R**

Note

Contact your local Eaton sales office for CE Mark transformer requirements. For other ratings or catalog numbers not shown, or for special enclosure types (including stainless steel), refer to Eaton. Frame drawings/dimensions information begins on **Page V2-T2-216**.

Three-Phase—2010 Energy-Efficient

4160 Delta Volts to 480Y/277 Volts—Aluminum Windings

kVA	Full Capacity Taps FCAN	FCBN	°C Temp. Rise	Frame	Wiring Diagram Number	Weight Lbs (kg)	Weathershield	Catalog Number
45	2 at +2.5%	2 at –2.5%	150	NH3	—	—	Included	**V46D47T45E3R**
75	2 at +2.5%	2 at –2.5%	150	NH4	—	—	Included	**V46D47T75E3R**
112.5	2 at +2.5%	2 at –2.5%	150	NH4	—	—	Included	**V46D47T12E3R**
150	2 at +2.5%	2 at –2.5%	150	NJ1	—	—	Included	**V46D47T49E3R**
225	2 at +2.5%	2 at –2.5%	150	NJ1	—	—	Included	**V46D47T22E3R**
300	2 at +2.5%	2 at –2.5%	150	NJ1	—	—	Included	**V46D47T33E3R**
500	2 at +2.5%	2 at –2.5%	150	NJ2	—	—	Included	**V46D47T55E3R**
750	2 at +2.5%	2 at –2.5%	150	NJ3	—	—	Included	**V46D47T77E3R**
45	2 at +2.5%	2 at –2.5%	115	NH3	—	—	Included	**V46D47F45E3R**
75	2 at +2.5%	2 at –2.5%	115	NH4	—	—	Included	**V46D47F75E3R**
112.5	2 at +2.5%	2 at –2.5%	115	NH4	—	—	Included	**V46D47F12E3R**
150	2 at +2.5%	2 at –2.5%	115	NJ1	—	—	Included	**V46D47F49E3R**
225	2 at +2.5%	2 at –2.5%	115	NJ1	—	—	Included	**V46D47F22E3R**
300	2 at +2.5%	2 at –2.5%	115	NJ1	—	—	Included	**V46D47F33E3R**
500	2 at +2.5%	2 at –2.5%	115	NJ2	—	—	Included	**V46D47F55E3R**
750	2 at +2.5%	2 at –2.5%	115	NJ3	—	—	Included	**V46D47F77E3R**
45	2 at +2.5%	2 at –2.5%	80	NH4	—	—	Included	**V46D47B45E3R**
75	2 at +2.5%	2 at –2.5%	80	NH4	—	—	Included	**V46D47B75E3R**
112.5	2 at +2.5%	2 at –2.5%	80	NJ1	—	—	Included	**V46D47B12E3R**
150	2 at +2.5%	2 at –2.5%	80	NJ1	—	—	Included	**V46D47B49E3R**
225	2 at +2.5%	2 at –2.5%	80	NJ1	—	—	Included	**V46D47B22E3R**
300	2 at +2.5%	2 at –2.5%	80	NJ2	—	—	Included	**V46D47B33E3R**
500	2 at +2.5%	2 at –2.5%	80	NJ3	—	—	Included	**V46D47B55E3R**
750	2 at +2.5%	2 at –2.5%	80	NJ3	—	—	Included	**V46D47B77E3R**

Note

Contact your local Eaton sales office for CE Mark transformer requirements. For other ratings or catalog numbers not shown, or for special enclosure types (including stainless steel), refer to Eaton. Frame drawings/dimensions information begins on **Page V2-T2-216**.

Three-Phase—2010 Energy-Efficient

2400 Delta Volts to 208Y/120 Volts—Aluminum Windings

kVA	Full Capacity Taps FCAN	FCBN	°C Temp. Rise	Frame	Wiring Diagram Number	Weight Lbs (kg)	Weathershield	Catalog Number
45	2 at +2.5%	2 at –2.5%	150	NH3	—	—	Included	**V42D28T45E3R**
75	2 at +2.5%	2 at –2.5%	150	NH4	—	—	Included	**V42D28T75E3R**
112.5	2 at +2.5%	2 at –2.5%	150	NH4	—	—	Included	**V42D28T12E3R**
150	2 at +2.5%	2 at –2.5%	150	NJ1	—	—	Included	**V42D28T49E3R**
225	2 at +2.5%	2 at –2.5%	150	NJ1	—	—	Included	**V42D28T22E3R**
300	2 at +2.5%	2 at –2.5%	150	NJ1	—	—	Included	**V42D28T33E3R**
500	2 at +2.5%	2 at –2.5%	150	NJ2	—	—	Included	**V42D28T55E3R**
750	2 at +2.5%	2 at –2.5%	150	NJ3	—	—	Included	**V42D28T77E3R**
45	2 at +2.5%	2 at –2.5%	115	NH3	—	—	Included	**V42D28F45E3R**
75	2 at +2.5%	2 at –2.5%	115	NH4	—	—	Included	**V42D28F75E3R**
112.5	2 at +2.5%	2 at –2.5%	115	NH4	—	—	Included	**V42D28F12E3R**
150	2 at +2.5%	2 at –2.5%	115	NJ1	—	—	Included	**V42D28F49E3R**
225	2 at +2.5%	2 at –2.5%	115	NJ1	—	—	Included	**V42D28F22E3R**
300	2 at +2.5%	2 at –2.5%	115	NJ1	—	—	Included	**V42D28F33E3R**
500	2 at +2.5%	2 at –2.5%	115	NJ2	—	—	Included	**V42D28F55E3R**
750	2 at +2.5%	2 at –2.5%	115	NJ3	—	—	Included	**V42D28F77E3R**
45	2 at +2.5%	2 at –2.5%	80	NH4	—	—	Included	**V42D28B45E3R**
75	2 at +2.5%	2 at –2.5%	80	NH4	—	—	Included	**V42D28B75E3R**
112.5	2 at +2.5%	2 at –2.5%	80	NJ1	—	—	Included	**V42D28B12E3R**
150	2 at +2.5%	2 at –2.5%	80	NJ1	—	—	Included	**V42D28B49E3R**
225	2 at +2.5%	2 at –2.5%	80	NJ1	—	—	Included	**V42D28B22E3R**
300	2 at +2.5%	2 at –2.5%	80	NJ2	—	—	Included	**V42D28B33E3R**
500	2 at +2.5%	2 at –2.5%	80	NJ3	—	—	Included	**V42D28B55E3R**
750	2 at +2.5%	2 at –2.5%	80	NJ3	—	—	Included	**V42D28B77E3R**

Note

Contact your local Eaton sales office for CE Mark transformer requirements. For other ratings or catalog numbers not shown, or for special enclosure types (including stainless steel), refer to Eaton. Frame drawings/dimensions information begins on **Page V2-T2-216**.

Three-Phase—2010 Energy-Efficient

4160 Delta Volts to 208Y/120 Volts—Aluminum Windings

kVA	Full Capacity Taps FCAN	FCBN	°C Temp. Rise	Frame	Wiring Diagram Number	Weight Lbs (kg)	Weathershield	Catalog Number
45	2 at +2.5%	2 at –2.5%	150	NH3	—	—	Included	**V46D28T45E3R**
75	2 at +2.5%	2 at –2.5%	150	NH4	—	—	Included	**V46D28T75E3R**
112.5	2 at +2.5%	2 at –2.5%	150	NH4	—	—	Included	**V46D28T12E3R**
150	2 at +2.5%	2 at –2.5%	150	NJ1	—	—	Included	**V46D28T49E3R**
225	2 at +2.5%	2 at –2.5%	150	NJ1	—	—	Included	**V46D28T22E3R**
300	2 at +2.5%	2 at –2.5%	150	NJ1	—	—	Included	**V46D28T33E3R**
500	2 at +2.5%	2 at –2.5%	150	NJ2	—	—	Included	**V46D28T55E3R**
750	2 at +2.5%	2 at –2.5%	150	NJ3	—	—	Included	**V46D28T77E3R**
45	2 at +2.5%	2 at –2.5%	115	NH3	—	—	Included	**V46D28F45E3R**
75	2 at +2.5%	2 at –2.5%	115	NH4	—	—	Included	**V46D28F75E3R**
112.5	2 at +2.5%	2 at –2.5%	115	NH4	—	—	Included	**V46D28F12E3R**
150	2 at +2.5%	2 at –2.5%	115	NJ1	—	—	Included	**V46D28F49E3R**
225	2 at +2.5%	2 at –2.5%	115	NJ1	—	—	Included	**V46D28F22E3R**
300	2 at +2.5%	2 at –2.5%	115	NJ1	—	—	Included	**V46D28F33E3R**
500	2 at +2.5%	2 at –2.5%	115	NJ2	—	—	Included	**V46D28F55E3R**
750	2 at +2.5%	2 at –2.5%	115	NJ3	—	—	Included	**V46D28F77E3R**
45	2 at +2.5%	2 at –2.5%	80	NH4	—	—	Included	**V46D28B45E3R**
75	2 at +2.5%	2 at –2.5%	80	NH4	—	—	Included	**V46D28B75E3R**
112.5	2 at +2.5%	2 at –2.5%	80	NJ1	—	—	Included	**V46D28B12E3R**
150	2 at +2.5%	2 at –2.5%	80	NJ1	—	—	Included	**V46D28B49E3R**
225	2 at +2.5%	2 at –2.5%	80	NJ1	—	—	Included	**V46D28B22E3R**
300	2 at +2.5%	2 at –2.5%	80	NJ2	—	—	Included	**V46D28B33E3R**
500	2 at +2.5%	2 at –2.5%	80	NJ3	—	—	Included	**V46D28B55E3R**
750	2 at +2.5%	2 at –2.5%	80	NJ3	—	—	Included	**V46D28B77E3R**

Note

Contact your local Eaton sales office for CE Mark transformer requirements. For other ratings or catalog numbers not shown, or for special enclosure types (including stainless steel), refer to Eaton. Frame drawings/dimensions information begins on **Page V2-T2-216**.

Dry-Type Distribution Transformers

Contents

Description	*Page*
Standards and Certifications	**V2-T2-186**
Catalog Number Selection	**V2-T2-187**
Product Selection	**V2-T2-189**
Options and Accessories	**V2-T2-191**
Technical Data and Specifications	**V2-T2-195**
Glossary of Transformer Terms	**V2-T2-211**
Frequently Asked Questions About Transformers	**V2-T2-214**

Standards and Certifications

Eaton dry-type distribution transformers are approved, listed, recognized or may comply with the following standards.

Engineering Standards

Catalog Product Name	UL Standard ①	UL/cUL File Number	UL Listed Control Number	cUL Energy Efficiency File Number	CSA File Number	Insulation System Temp/°C	kVA Single-Phase	kVA Three-Phase	Applicable IEC Standard
Industrial Control Transformer									
MTE	5085	E46323	702X	—	LR27533	105	0.025–1.5	N/A	61558
MTK	5085	E46323	702X	—	LR27533	180	0.05–5	N/A	61558
Encapsulated Transformer									
AP	5085	E10156	591H	—	—	180	3–10	N/A	61558
AP	1561	E78389	591H	—	—	180	15	N/A	61558
EP	5085	E10156	591H	—	LR60545	180	0.05–10	N/A	61558
EP	1561	E78389	591H	EV157 ②	LR60545 ③	180	15–50	N/A	61558 ④ / 726 ⑤
EPT	5085	E10156	591H	—	LR60545	180	N/A	3–9	61558 ⑥ / 726 ⑦
EPT	1561	E78389	591H	EV157 ⑧	LR60545 ⑨	180	N/A	15–75	726
MPC	1062	E53449	591H	—	LR60546	180	3–25	15–30	—
Ventilated Transformer									
DS-3	1561	E78389	591H	—	—	220	15–167	N/A	60726
DT-3	1561	E78389	591H	—	—	220	N/A	15–750	60726
KT	1561	E78389	591H	—	—	220	N/A	9–500	N/A

Notes

① UL 5085 replaces UL 506.
② Applies to 25–50 kVA.
③ Applies to 25 kVA.
④ Applies to 15–25 kVA.
⑤ Applies to 37.5 kVA.
⑥ Applies to 3 kVA.
⑦ Applies to 5–9 kVA.
⑧ Applies to 30–75 kVA.
⑨ Applies to 30 kVA.

In addition to the above standards, Eaton dry-type distribution transformers are also manufactured in compliance with the applicable standards listed below.

Not all of the following standards apply to every transformer.

NEC: National Electrical Code

NEMA ST-1: Specialty Transformers (C89.1) (control transformers).

NEMA ST-20: General-Purpose Transformers.

NEMA TP-1: Guide for Determining Energy Efficiency for Distribution Transformers.

NEMA 250: Enclosures for Electrical Equipment (1000 volts maximum).

IEEE C57.12.01: General Requirements for Dry-Type Distribution and Power Transformers (including those with solid-cast and/or resin-encapsulated windings).

ANSI C57.12.70: Terminal Markings and Connections for Distribution and Power Transformers.

ANSI C57.12.91: Standard Test Code for Dry-Type Distribution and Power Transformers.

CSA C22 No. 47-M90: Air-Cooled Transformers (Dry-Type).

CSA C9-M1981: Dry-Type Transformers.

CSA C22.2 No. 66: Specialty Transformers.

CSA 802-94: Maximum Losses for Distribution, Power and Dry-Type Transformers.

NEMA TP-2: Standard Test Method for Measuring the Energy Consumption of Distribution Transformers.

NEMA TP-3

Listed

c UL US Listed

c UL Listed

Catalog Number Selection

General-Purpose, Energy-Efficient, Mini–Power Center, Shielded Isolation, Nonlinear, Buck-Boost, Marine Duty Transformers—Example: S20N11S05A

T S 20 N 11 S 05 A

Prefix Options

C = CSA labeled ventilated transformer

Marine Duty
QS = EPM marine (1-Ph encapsulated)
LY = EPTM Marine (3-Ph encapsulated)
RT = DS-3M marine (1-Ph ventilated)
MV = DT-3M marine (3-Ph ventilated)

Type

S = EP (single-phase encapsulated)
Y = EPT (three-phase encapsulated)
T = DS-3 (single-phase ventilated)
V = DT-3 (three-phase ventilated)
P = Mini–power center
Z = Class 1 Division 2 Groups A, B, C, D
X = Harmonic mitigating (three-phase ventilated)

Nonlinear
H = KT-4 (three-phase ventilated)
B = KT-9 (three-phase ventilated)
N = KT-13 (three-phase ventilated)
G = KT-20 (three-phase ventilated)
J = KT-30 (three-phase ventilated)
A = KT-40 (three-phase ventilated)
K = KT-50 (three-phase ventilated)
HT = KT-4 (single-phase ventilated)
NT = KT-13 (single-phase ventilated)
GT = KT-20 (single-phase ventilated)

Primary Voltage

13 = 110 x 220
12 = 120
10 = 120 x 240
29 = 208
72 = 200
25 = 220
23 = 230
24 = 240
20 = 240 x 480
27 = 277
38 = 380
39 = 400
43 = 416
44 = 440
45 = 450
48 = 480
57 = 575
60 = 600
42 = 2400
46 = 4160
49 = 4800
40 = Export model
54 = 120/208/240/277

Taps

D = 2 at +2.5%, 2 at –2.5%
E = 1 at +5%, 1 at –5%
F = 1 at –10%
G = 2 at –5%
J = 4 at –2.5%
K = 1 at –10% x 2 at –5%
L = 2 at –5% x 4 at –2.5%
M = 2 at +2.5%, 4 at –2.5%
N = None
R = 1 at +5%, 2 at –5%
P = 1 at +5%, 2 at –5% x 2 at +2.5%, 4 at –2.5%
T = 1 at +4.2%, 1 at –4.2%
U = 1 at +2.5%, 3 at –2.5%
W = 1 at +3.5%, 1 at –3.5%
X = 2 at +3.1%, 2 at –3.1%

kVA

81 = 0.05	**03** = 3	**37** = 37.5	**52** = 250
85 = 0.075	**05** = 5	**45** = 45	**33** = 300
82 = 0.10	**06** = 6	**50** = 50	**54** = 333
83 = 0.15	**07** = 7.5	**75** = 75	**55** = 500
26 = 0.25	**09** = 9	**99** = 100	**60** = 600
51 = 0.50	**10** = 10	**12** = 112.5	**77** = 750
76 = 0.75	**15** = 15	**49** = 150	**11** = 1000
01 = 1	**21** = 22.5	**67** = 167	**14** = 1500
16 = 1.5	**25** = 25	**22** = 225	
02 = 2	**30** = 30		

Temperature Rise

T = 150°C rise with 220°C insulation system (ventilated)
F = 115°C rise with 220°C insulation system (ventilated)
B = 80°C rise with 220°C insulation system (ventilated)
H = 130°C rise with 200°C insulation system (ventilated)
G = 115°C rise with 200°C insulation system (ventilated)
J = 80°C rise with 220°C insulation system (ventilated)
P = 115°C rise with 130°C insulation system (encapsulated)
S = 115°C rise with 180°C insulation system (encapsulated and MPC)
L = 80°C rise with 180°C insulation system (encapsulated and MPC)

Secondary Voltage

04 = 12/24	**20** = 240 x 480
06 = 16/32	**21** = 240/480
08 = 24/48	**27** = 277
14 = 110/220	**38** = 380 delta
12 = 120	**37** = 380Y/220
10 = 120 x 240	**34** = 400Y/231
11 = 120/240	**51** = 416Y/240
54 = 127/254	**35** = 440Y/254
19 = 190Y/110	**62** = 460Y/266
28 = 208Y/120	**47** = 480Y/277
29 = 208	**48** = 480 delta
25 = 220 delta	**60** = 600 delta
31 = 220Y/127	**61** = 600Y/346
26 = 220 delta/110 midtap	**42** = 2400
22 = 240 delta/120 midtap	**41** = 4160Y/2400
64 = 240Y/139	**46** = 4160
24 = 240 delta	**49** = 4800

Suffix Options

A...Y = ①
CU = ②
SS = ③
ZZ = ④
NV = ⑤
X = ⑥
LS_ _ = ⑦
AF = ⑧
TR = ⑨
SR = ⑩
CE = ⑪
T = ⑫
EE = ⑬
NON = ⑭
POS = ⑮
NEG = ⑯
THR = ⑰
E3 = ⑱
SS4X = ⑲
Z = ⑳
S6 = ㉑
I2 = ㉒
I3 = ㉓
I4 = ㉔
N3 = ㉕

Notes

① Model number is not used on newly designed/redesigned transformers.
② Copper windings.
③ Grade 304 stainless steel enclosure (does not imply a NEMA 4X rating).
④ Open type core and coil assembly.
⑤ Totally enclosed non-ventilated DS-3 or DT-3.
⑥ 50/60 Hz.
⑦ Low sound design. LS47 indicates low sound equal to 47 dB; LS42 indicates 42 dB.
⑧ Fungus proof.
⑨ Certified test report of standard production tests for the specific serial number to be shipped.
⑩ Certified sound level report.
⑪ CE Marked.
⑫ Thermal indicator embedded in center coil. Suffix "TT" indicates two thermal indicators of different temperature ratings, are installed.
⑬ NEMA TP-1 efficient.
⑭ 0° phase-shift (used with HMTs).
⑮ +15° phase-shift (used with HMTs).
⑯ –15° phase-shift (used with HMTs).
⑰ –30° phase-shift (used with HMTs).
⑱ CSL3 DOE 2007 energy-efficient.
⑲ NEMA 4X Grade 304 stainless steel enclosure.
⑳ Easy install base.
㉑ Grade 316 stainless steel enclosure (does not imply NEMA 4X rating).
㉒ Integral 2-inch infrared viewing window.
㉓ Integral 3-inch infrared viewing window.
㉔ Integral 4-inch infrared viewing window.
㉕ NEMA Premium® Efficient.

For Eaton's industrial control transformers catalog number selection, see **Page V2-T2-188.**

Contact your local Eaton sales office for voltage combinations not shown. Use table for catalog number breakdown only. Do not use to create catalog numbers because all combinations may not be valid.

Motor Drive Isolation Transformers—Example: MD145E89B

MD 145 E 89 B

Type	
MD	= DT-3
HD	= KT-4
ND	= KT-13

kVA			
075	= 7.5	**175**	= 175
11	= 11	**220**	= 220
14	= 14	**275**	= 275
20	= 20	**330**	= 330
27	= 27	**440**	= 440
34	= 34	**550**	= 550
40	= 40	**660**	= 660
51	= 51	**770**	= 770
63	= 63	**880**	= 880
75	= 75	**1000**	= 1000
93	= 93	**1250**	= 1250
118	= 118	**1500**	= 1500
145	= 145		

Taps ①	
D	= 2 at +2.5%, 2 at –2.5%
E	= 1 at +5%, 1 at –5%

Voltage			
		Primary	**Secondary**
82	=	230 delta	208Y/120
83	=	208 delta	208Y/120
84	=	240 delta	480 delta
85	=	208 delta	230Y/133
86	=	208 delta	460Y/266
87	=	208 delta	480 delta
88	=	230 delta	230Y/133
89	=	230 delta	460Y/266
90	=	230 delta	575Y/332
91	=	460 delta	230Y/133
92	=	460 delta	460Y/266
93	=	460 delta	575Y/332
94	=	575 delta	230Y/133
95	=	575 delta	460Y/266
96	=	575 delta	575Y/332
97	=	575 delta	480 delta
98	=	600 delta	480 delta

Suffix Options	
Y	= Encapsulated (Type EPT) design
ES	= Electrostatic shield
CU	= Copper windings
F	= 115°C rise
B	= 80°C rise
X	= 50/60 Hz

Notes

① For other tap combinations, contact your local Eaton sales office.

Contact your local Eaton sales office for voltage combinations not shown. Use table for catalog number breakdown only. Do not use to create catalog numbers because all combinations may not be valid.

Product Selection

Single-Phase Transformers

How to Select Single-Phase Units

1. Determine the primary (source) voltage—the voltage presently available.
2. Determine the secondary (load) voltage—the voltage needed at the load.
3. Determine the kVA load:
   - If the load is defined in kVA, a transformer can be selected from the tabulated data
   - If the load rating is given in amperes, determine the load kVA from the chart (below right). To determine kVA when volts and amperes are known, use the formula:

$$kVA = \frac{Volts \times Amperes}{1000}$$

   - If the load is an AC motor, determine the minimum transformer kVA from the chart at the right
   - Select a transformer rating equal to or greater than the load kVA.
4. Define tap arrangements needed.
5. Define temperature rise.

Using the above procedure, select the transformer from the listings in this catalog.

Single-Phase AC Motors

	Full Load Amperes				Minimum Transformer
Horsepower	**115 Volts**	**208 Volts**	**220 Volts**	**230 Volts**	**kVA** ①
1/6	4.4	2.4	2.3	2.2	0.53
1/4	5.8	3.2	3.0	2.9	0.70
1/3	7.2	4.0	3.8	3.6	0.87
1/2	9.8	5.4	5.1	4.9	1.18
3/4	13.8	7.6	7.2	6.9	1.66
1	16	8.8	8.4	8	1.92
1-1/2	20	11.0	10.4	10	2.40
2	24	13.2	12.5	12	2.88
3	34	18.7	17.8	17	4.10
5	56	30.8	29.3	28	6.72
7-1/2	80	44	42	40	9.6
10	100	55	52	50	12.0

Full Load Current in Amperes—Single-Phase Circuits

	Voltage								
kVA	**120**	**208**	**220**	**240**	**277**	**480**	**600**	**2400**	**4160**
0.25	2.0	1.2	1.1	1.0	0.9	0.5	0.4	0.10	0.06
0.50	4.2	2.4	2.3	2.1	1.8	1.0	0.8	0.21	0.12
0.75	6.3	3.6	3.4	3.1	2.7	1.6	1.3	0.31	0.18
1	8.3	4.8	4.5	4.2	3.6	2.1	1.7	0.42	0.24
1.5	12.5	7.2	6.8	6.2	5.4	3.1	2.5	0.63	0.36
2	16.7	9.6	9.1	8.3	7.2	4.2	3.3	0.83	0.48
3	25	14.4	13.6	12.5	10.8	6.2	5.0	1.2	0.72
5	41	24.0	22.7	20.8	18.0	10.4	8.3	2.1	1.2
7.5	62	36	34	31	27	15.6	12.5	3.1	1.8
10	83	48	45	41	36	20.8	16.7	4.2	2.4
15	125	72	68	62	54	31	25	6.2	3.6
25	208	120	114	104	90	52	41	10.4	6.0
37.5	312	180	170	156	135	78	62	15.6	9.0
50	416	240	227	208	180	104	83	20.8	12.0
75	625	360	341	312	270	156	125	31.3	18.0
100	833	480	455	416	361	208	166	41.7	24.0
167	1391	802	759	695	602	347	278	69.6	40.1

Notes

① If motors are started more than once per hour, increase minimum transformer kVA by 20%.

When motor service factor is greater than 1, increase full load amperes proportionally. Example: If service factor is 1.15, increase above ampere values by 15%.

Three-Phase Transformers

How to Select Three-Phase Units

1. Determine the primary (source) voltage—the voltage presently available.
2. Determine the secondary (load) voltage—the voltage needed at the load.
3. Determine the kVA load:
   - If the load is defined in kVA, a transformer can be selected from the tabulated data
   - If the load rating is given in amperes, determine the load kVA from the chart (below right). To determine kVA when volts and amperes are known, use the formula:

$$kVA = \frac{Volts \times Amperes \times 1.732}{1000}$$

   - If the load is an AC motor, determine the minimum transformer kVA from the chart at the right
   - Select a transformer rating equal to or greater than the load kVA
4. Define tap arrangements needed.
5. Define temperature rise.

Using the above procedure, select the transformer from the listings in this catalog.

Three-Phase AC Motors

	Full Load Amperes					Minimum Transformer kVA ①
Horsepower	208 Volts	230 Volts	380 Volts	460 Volts	575 Volts	
0.5	2.2	2.0	1.2	1.0	0.8	0.9
3/4	3.1	2.8	1.7	1.4	1.1	1.2
1	4.0	3.6	2.2	1.8	1.4	1.5
1.5	5.7	5.2	3.1	2.6	2.1	2.1
2	7.5	6.8	4.1	3.4	2.7	2.7
3	10.7	9.6	5.8	4.8	3.9	3.8
5	16.7	15.2	9.2	7.6	6.1	6.3
7.5	24	22	14	11	9	9.2
10	31	28	17	14	11	11.2
15	46	42	26	21	17	16.6
20	59	54	33	27	22	21.6
25	75	68	41	34	27	26.6
30	88	80	48	40	32	32.4
40	114	104	63	52	41	43.2
50	143	130	79	65	52	52
60	170	154	93	77	62	64
75	211	192	116	96	77	80
100	273	248	150	124	99	103
125	342	312	189	156	125	130
150	396	360	218	180	144	150
200	528	480	291	240	192	200

Full Load Current in Amperes—Three-Phase Circuits

	Voltage						
kVA	208	240	380	480	600	2400	4160
3	8.3	7.2	4.6	3.6	2.9	0.72	0.42
6	16.6	14.4	9.1	7.2	5.8	1.4	0.83
9	25	21.6	13.7	10.8	8.6	2.2	1.2
15	41.7	36.1	22.8	18.0	14.4	3.6	2.1
22.5	62.4	54.1	34.2	27.1	21.6	5.4	3.1
30	83.4	72.3	45.6	36.1	28.9	7.2	4.2
37.5	104	90.3	57.0	45.2	36.1	9.0	5.2
45	124	108	68.4	54.2	43.4	10.8	6.3
50	139	120	76	60.1	48.1	12.0	6.9
75	208	180	114	90	72	18.0	10.4
112.5	312	270	171	135	108	27.1	15.6
150	416	360	228	180	144	36.1	20.8
225	624	541	342	270	216	54.2	31.3
300	832	721	456	360	288	72.2	41.6
500	1387	1202	760	601	481	120	69.4
750	2084	1806	1140	903	723	180	104
1000	2779	2408	1519	1204	963	241	139

Notes

① If motors are started more than once per hour, increase minimum transformer kVA by 20%.

When motor service factor is greater than 1, increase full load amperes proportionally. Example: If service factor is 1.15, increase above ampere values by 15%.

Options and Accessories

(Order separately)

Weathershield Kit

A weathershield kit consisting of a front and rear cover shield must be installed on all ventilated dry-type distribution transformers when the unit is located outdoors. The shields protect the transformer top ventilation openings against rain but allow for proper ventilation. Field installation hardware is not required. Refer to specific transformer listing for selection of weathershield kit. Proper installation provides a NEMA 3R rating.

Note: For 316 stainless steel, add the suffix 'S' to the catalog number.

Weathershield Kit

Weathershield Kit

Fits Frame Size(s) ①	Catalog Number ②
809, 810, 811, 816, 817, 818	**WS11**
814, 814E	**WS13**
815	**WS15**
819, 820	**WS16**
808, 908, 909, 910, 911, 912, 910A, 911A, 912A	**WS31**
912B, 912Z, 912D	**WS38**
812, 813, 913A, 913B, 914A, 915A, 916, 914B, 915B	**WS33**
914D, 915D, 914F, 915F, 914Z, 915Z	**WS39**
916A, 916B, 912Z	**WS19**
917, 918, 918A	**WS34**
919, 920, 919E, 919EX, 920E, 920EX	**WS35**
922	**WS36**
923	**WS37**
842	**WS45**
843	**WS43**
844	**WS44**
939	**WS57**
940	**WS58**
942	**WS59**
943	**WS60**
944	**WS61**
945	**WS62**

Terminal Extension Kit

A terminal extension kit is used to allow front access to the rear terminals on most 500 and 750 kVA transformers (transformers on frames 919 and 920) when insufficient space is available at the rear of the transformer. Eaton recommends a minimum 6-inch clearance from the wall to maintain proper ventilation.

Terminal Extension Kit

Fits Frame Size(s) ①	Bus Material	Catalog Number
919	Aluminum	**EXT55AL**
919	Copper	**EXT55CU**
920	Aluminum	**EXT77AL**
920	Copper	**EXT77CU**

Wall-Mounting Bracket

Wall-mounting brackets are used to wall-mount ventilated transformers. This bracket allows the transformer to be installed with the proper clearance, as recommended by Eaton.

Wall-mounting brackets are compatible with the following frames.

Wall-Mounting Bracket

Availability Guide Wall-Mounting Bracket WMB01

Frame Sizes ①	Catalog Number
Type DS-3 (Single-Phase Compatible)	
809, 810, 811, 812, 813, 815, 816, 817, 818, 835, 836, 837, 814A, 842	**WMB01**
Type DT-3, K-Factor, Drive Isolation (Three-Phase Compatible)	
908, 909, 910, 911, 912, 910A, 911A, 912A, 912B, 912D, 913A, 913B, 914A, 914B, 914D, 915D, 915A, 915B, 914F, 915F, 912Z, 914Z, 915Z	**WMB01**
939, 940	**WMB05**
942, 943	**WMB04**

Notes

① Effective June 1, 2001, frame numbers will have a prefix of FR, e.g., **FR819**. Dimensions, accessories and so on are still applicable as if the FR did not exist.

② For Grade 316 stainless steel weathershields, add the suffix "S" to a catalog number, e.g., **WS31S**.

Terminal Lug Kits for Type DT-3 Transformers

Typical Sizing	Terminal Lugs Cable Range	Quantity	Hardware Bolt Size	Quantity	Catalog Number
15–37.5 kVA single-phase 15–45 kVA three-phase	#14–#2 #6–250 kcmil	8 4	1/4-20 x 3/4	8	**LKS1**
50–75 kVA single-phase 75–112.5 kVA three-phase	#6–250 kcmil	12	1/4-20 x 3/4 1/4-20 x 1-3/4	8 8	**LKS2**
100–167 kVA single-phase 150–300 kVA three-phase	#6–250 kcmil #2–600 kcmil	3 22	1/4-20 x 3/4 3/8-16 x 2	3 16	**LKS3**
500 kVA three-phase	#2–600 kcmil	29	3/8-16 x 2	18	**LKS4**

Rodent Screens

Description	Frame Size(s) ①	Catalog Number
Rodent screens are used to discourage entry by birds or rodents.	908, 909	**RS01**
	910A, 911, 912	**RS02**
	913B, 914B, 915B	**RS03**
	916	**RS04**
	917, 918, 918A	**RS05**
	919, 920, 919E, 919EX, 920E, 920EX	**RS06**
	916A, 916B	**RS07**
	922	**RS08**
	923	**RS09**
	814, 821, 814E	**RS11**
	815	**RS12**
	816	**RS13**
	817, 818	**RS14**
	819, 820	**RS15**
	842	**RS42**
	843	**RS43**
	844	**RS44**
	912B, 912Z, 912D	**RS16**
	914D, 915D, 914F, 915F, 914Z, 915Z	**RS17**
	916Z	**RS07**
	939	**RS57**
	940	**RS58**
	942	**RS59**
	943	**RS60**
	944	**RS61**
	945	**RS62**

Replacement Parts for Mini–Power Centers

Frame	Deadfront Cover (Breaker Cover)	Front Cover
283	47-37503	7074C98H04
284	47-37503-2	7074C98H01
285	47-37503-3	7074C98H02
286	47-37503-4	7074C98H02
287	47-37503-5	7074C98H03
289	47-37459	7074C44H01
290	47-37459-2	7074C44H02
291	47-37459-3	7074C44H03
289A	47-42072-1	7074C44H01
290A	47-42072-2	7074C44H02
291A	47-42072-3	7074C44H03

Notes

① Effective June 1, 2001, frame numbers will have a prefix of FR, e.g., **FR819**. Dimensions, accessories and so on are still applicable as if the FR did not exist.

Lugs are rated Al/Cu and are suitable for use with either aluminum or copper conductors.

Case Parts for Ventilated Units

Frame(s) ①	Front Panel (Upper)	Front Panel (Lower)	Back Panel (Upper)	Back Panel (Lower)	Front or Back Panel (Cutout Cover Plate)	Top Cover	Side Panel (Two Required per Transformer)	Bottom
Single-Phase								
809	7073C16P03	—	7073C16P03	—	—	7073C17P01	7073C18P04	7073C14P03
810	7073C16P01	—	7073C16P01	—	—	7073C17P01	7073C18P01	7073C14P01
811	7073C16P01	—	7073C16P01	—	—	7073C17P01	7073C18P01	7073C14P01
812	7073C16P02	—	7073C16P02	—	—	7073C17P02	7073C18P02	7073C14P02
813	7073C16P02	—	7073C16P02	—	—	7073C17P02	7073C18P02	7073C14P02
814, 814E	7073C54P01	—	7073C54P01	—	—	7073C17P03	7073C18P05	7073C14P04
815	47-39433	—	47-39433	—	—	47-39431	47-39430	47-39429
816	47-40452	—	47-40452	—	—	47-40453	47-40451	47-40449
817	47-40457	—	47-40457	—	—	47-40458	47-40456	47-40454
818	47-40457	—	47-40457	—	—	47-40458	47-40456	47-40454
819	47-40574	—	47-40574	—	—	47-40575	47-40573	47-40459
820	47-40574	—	47-40574	—	—	47-40575	47-40573	47-40459
842	47-54828-2	—	47-54828-2	—	—	47-54829-2	47-54827-2	47-55335-2
843	47-54828-4	—	47-54828-4	—	—	47-54829-4	47-54827-4	47-55335-3
844	47-54828-5	—	47-54828-5	—	—	47-54829-5	47-54827-5	47-55335-5

Notes

① Effective June 1, 2001, frame numbers will have a prefix of FR, e.g., **FR819**. Dimensions, accessories and so on are still applicable as if the FR did not exist.

Parts listed are for standard catalog listed transformers. Units with modifications may require different parts. (Frame number from transformer nameplate required.) Transformer nameplate and UL label are not field replaceable.

Case Parts for Ventilated Units, continued

Frame(s) ①	Front Panel (Upper)	Front Panel (Lower)	Back Panel (Upper)	Back Panel (Lower)	Front or Back Panel (Cutout Cover Plate)	Top Cover	Side Panel (Two Required per Transformer)	Bottom
Three-Phase								
908	7073C37P01	—	7073C37P01	—	—	1714C45P01	1714C44P03	7073C20P05
909	7073C37P01	—	7073C37P01	—	—	1714C45P01	1714C44P03	7073C20P05
910	1714C46P01	—	1714C46P01	—	—	1714C45P01	1714C44P01	7073C20P01
911	1714C46P01	—	1714C46P01	—	—	1714C45P01	1714C44P01	7073C20P01
912	1714C46P01	—	1714C46P01	—	—	1714C45P01	1714C44P01	7073C20P01
916	1714C60P01	—	1714C60P01	—	—	1714C58P01	1714C56P01	7073C20P03
917	47-44973-1	—	47-44973-1	—	—	1714C67P01	1714C64P01	7073C20P04
918	47-44973-1	—	47-44973-1	—	—	1714C67P01	1714C64P01	7073C20P04
919, 919E, 919EX	2D46331P03	2D46331P04	2D46331P03	2D46331P04	2D46331P01	2D46331P02	2D46332P01	2D46331P04
920, 920E, 920EX	2D46331P03	2D46331P04	2D46331P03	2D46331P04	2D46331P01	2D46331P02	2D46332P01	2D46331P04
922	2D46391H06	2D46391H08	2D46391H03	2D46391H08		2D46391H02	2D46392H01	—
923	47-45927-1	—	47-45927-1	—	—	47-45926-1	47-45925-1	47-45759-1
910A	47-40592	—	47-40592	—	—	1714C45P01	47-40591	47-40589
911A	47-40592	—	47-40592	—	—	1714C45P01	47-40591	47-40589
912A	47-40592	—	47-40592	—	—	1714C45P01	47-40591	47-40589
912B	47-49323-1	—	47-49323-1	—	—	47-49322-1	47-49321-1	47-49320-1
912D	47-55332-2	—	47-55332-2	—	—	47-55331-2	47-55329-2	47-55330-1
912DN	47-55332-4	—	47-55332-4	—	—	47-55331-2	47-55329-2	47-55330-3
913A	1714C47P03	—	1714C47P03	—	—	1714C45P02	1714C44P07	7073C30P02
913B	47-40580	—	47-40580	—	—	1714C45P02	47-40578	47-41792
914A	1714C47P03	—	1714C47P03	—	—	1714C45P02	1714C44P07	7073C30P02
914B	47-40580	—	47-40580	—	—	1714C45P02	47-40578	47-41792
914D	47-49317-1	—	47-49317-1	—	—	47-49316-1	47-49315-1	47-49314-1
914F/915F	47-56915-1	—	47-56915-1	—	—	47-56916-1	47-56917-1	47-56918-1
915A	1714C47P03	—	1714C47P03	—	—	1714C45P02	1714C44P07	7073C30P02
915B	47-40580	—	47-40580	—	—	1714C45P02	47-40578	47-41792
915D	47-49317-1	—	47-49317-1	—	—	47-49316-1	47-49315-1	47-49314-1
916A	47-41790	—	47-41790	—	—	47-41791	47-41789	47-41788
918A	47-41801	—	47-41801	—	—	47-41802	47-41800	47-41802
912Z	47-49323-1	—	47-49323-1	—	—	47-49322-1	47-49991-1	47-49989-1
915Z	47-49317-1	—	47-49317-1	—	—	47-49316-1	47-49994-1	47-49995-1
916Z	47-49992-1	—	47-49992-1	—	—	47-41791	47-49988-1	47-49987-1
939	73-5902-1	—	73-5902-1	—	—	73-5903-1	73-5900-1	73-5901-1
940	73-5902-2	—	73-5902-2	—	—	73-5903-2	73-5900-2	73-5901-2
942	73-5902-3	—	73-5902-3	—	—	73-5903-3	73-5900-3	73-5901-3
943	73-5902-4	—	73-5902-4	—	—	73-5903-4	73-5900-4	73-5901-4
944	73-5902-5	—	73-5902-5	—	—	73-5903-5	73-5900-5	73-5901-5
945	73-5902-6	—	73-5902-6	—	—	73-5903-6	73-5900-6	73-5901-6

Notes

① Effective June 1, 2001, frame numbers will have a prefix of FR, e.g., **FR819**. Dimensions, accessories and so on are still applicable as if the FR did not exist.

Parts listed are for standard catalog listed transformers. Units with modifications may require different parts. (Frame number from transformer nameplate required.) Transformer nameplate and UL label are not field replaceable.

Technical Data and Specifications

Customer-Furnished Connecting Cables

Eaton recommends that external cables be rated 90°C (sized at 75°C ampacity) for encapsulated designs and 75°C for ventilated designs. **Primary and secondary terminal lugs are not included. Lug kits are available separately.**

Overload Capability

Short-term overload capacity is designed into transformers as required by ANSI. Dry-type distribution transformers will deliver 200% nameplate load for one-half hour, 150% load for one hour and 125% load for four hours without being damaged, provided that a constant 50% load precedes and follows the overload. See ANSI C57.96-01.250 for additional limitations.

Continuous overload capacity is not deliberately designed into a transformer because the design objective is to be within the allowed winding temperature rise with nameplate loading.

Seismically Qualified

Eaton manufactured dry-type distribution transformers are seismically qualified, and exceed requirements of the Uniform Building Code (UBC) and California Code Title 24.

Taps

Primary taps are available in most ratings to allow compensation for source voltage variations.

Series-Multiple Windings

Series-multiple windings consist of two similar coils in each winding that can be connected in series or parallel (multiple). Transformers with series-multiple windings are designated with a "x" or "/" between the voltage ratings, such as voltages of "120/240" or "240 x 480." If the series-multiple winding is designated by an "x," the winding can be connected only for a series or parallel. With the "/" designation, a midpoint also becomes available in addition to the series or parallel connection. As an example, a 120 x 240 winding can be connected for either 120 (parallel) or 240 (series), but a 120/240 winding can be connected for 120 (parallel), 240 (series) or 240 with a 120 midpoint.

Enclosures

Eaton's ventilated transformers—Types DS-3, DT-3, MD and KT—use a NEMA 2 rated (drip-proof) enclosure as standard, and are rated NEMA 3R with the addition of weathershields. Eaton encapsulated—Types EP, EPT, EPZ and EPTZ—and totally enclosed, non-ventilated (Types DS-3E and DT-3E) transformers use a NEMA 3R rated enclosure.

Buck-Boost Transformers

An autotransformer has only one winding, and is therefore smaller and more economical than the conventional two-winding transformer. In an autotransformer, the primary and secondary are electrically and mechanically connected. The required secondary voltage is obtained by "tapping-off" from the single winding.

Buck-boost autotransformers are insulated units with 120 x 240 or 240 x 480 volt primaries and 12/24, 16/32 or 24/48 volt secondaries, and provide a very economical method for minor voltage adjustments where circuit isolation is not needed.

Autotransformers can be used only where local electrical codes permit, and isolation of the two circuits is not required.

Nonlinear Ratings

The transformers shall be specifically designed to supply circuits with a harmonic profile equal to or less than a K-factor of 4 or 13, as described in the following table, without exceeding specified temperature rise.

Nonlinear Ratings

Harmonic	K-4	K-13
Fundamental	100.0%	100.0%
3rd	34.0%	70.0%
5th	22.0%	42.0%
7th	3.0%	5.0%
9th	1.0%	3.0%
11th	0.7%	3.0%
13th	0.5%	1.0%
15th	0.3%	0.7%
17th	0.3%	0.6%

Sound Levels

All Eaton 600 volt class general-purpose dry-type distribution transformers are designed to meet NEMA ST-20 sound levels listed here. These are the sound levels measured in a soundproof environment. Actual sound levels measured at an installation will likely be higher (up to 15 dB greater) due to electrical connections and environmental conditions. Lower sound levels are available and should be specified when the transformer is going to be installed in an area where sound may be a concern.

All Eaton general-purpose dry-type distribution transformers are designed with sound levels lower than NEMA ST-20 maximum levels. However, consideration should be given to the specific location of the transformers and their installation to minimize the potential for sound transmission to surrounding structures and sound reflection. It is suggested that the following installation methods be included:

1. If possible, mount the transformer away from corners of walls or ceilings. For installation that must be near a corner, use sound-absorbing materials on the walls and ceilings if necessary to eliminate reflection.
2. Provide a solid foundation for mounting the transformer and then use vibration dampening mounts if not already provided in the transformer. (Eaton encapsulated EP/EPT designs use a special encapsulation system and ventilated DS/DT-3 designs contain a built-in vibration dampening system to minimize and isolate sound transmission.)
3. Provide flexible conduit to make the connections to the transformer.
4. Locate the transformer as far as possible from areas where high sound levels are undesirable.

Average Sound Levels

NEMA ST-20 Average Sound Level, dB

Equivalent Winding kVA Range	Self-Cooled Ventilated (up to 1.2 kV) K-Factor 1, 4, 9	Self-Cooled Ventilated (up to 1.2 kV) K-Factor 13, 20	Encapsulated (up to 1.2 kV)
3.00 and below	40	40	45
3.01 to 9.00	40	40	45
9.01 to 15.00	45	45	50
15.01 to 30.00	45	45	50
30.01 to 50.00	45	48	50
50.01 to 75.00	50	53	55
75.01 to 112.50	50	53	55
112.51 to 150.00	50	53	55
150.01 to 225.00	55	58	57
225.01 to 300.00	55	58	57
300.01 to 500.00	60	63	59
500.01 to 700.00	62	65	61
700.01 to 1000.00	64	67	63
Greater than 1000	Consult factory	Consult factory	Consult factory

Typical Data for 600-Volt Class General-Purpose Dry-Type Transformers, Aluminum Wound ①

Type EP 115°C Rise

	Weight Lbs		Losses in Watts		Efficiency				% Regulation		% Impedance ②		
kVA	Al	Cu	No Load	Total	1/4 Load	1/2 Load	3/4 Load	Full Load	100% P.F.	80% P.F.	Min.	Max.	Sound Level dB
0.05	—	7	6	9	65.3	79.6	84.3	85.6	5.9	6.4	5.5	9.5	45
0.075	—	7	7	14	66.0	79.0	82.5	82.8	9.4	9.2	7.5	11.0	45
0.10	—	7	5	15	82.4	86.9	87.7	86.5	10.3	10.6	8.0	12.0	45
0.15	—	8	7	20	83.4	88.2	88.9	87.8	9.0	9.6	8.0	12.0	45
0.25	—	12	14	29	79.0	87.2	89.5	89.6	5.9	7.5	7.5	9.5	45
0.5	—	13	20	47	85.1	90.3	91.4	91.4	5.5	7.0	5.0	7.0	45
0.75	—	20	29	57	86.0	91.3	92.7	92.9	3.9	5.0	4.0	6.0	45
1	—	30	24	60	90.8	93.9	94.5	94.4	3.8	4.9	3.8	5.8	45
1.5	65	40	30	90	92.5	94.7	95.0	94.6	4.1	5.2	2.5	4.5	45
2	113	40	30	100	94.2	95.7	95.8	95.4	3.6	4.7	3.3	5.3	45
3	—	69	61	135	92.0	95.0	95.7	95.7	2.5	3.5	2.5	4.1	45
5	—	120	104	215	91.8	95.0	95.8	95.9	2.3	3.3	2.0	4.6	45
7.5	123	133	129	250	93.2	96.0	96.7	95.9	1.5	2.4	2.4	3.4	45
10	193	208	153	295	93.9	96.3	97.0	97.2	1.5	2.5	2.0	3.3	50
15	216	235	209	435	94.4	96.6	97.1	97.2	1.6	2.8	1.6	3.6	50
25	385	414	191	440	96.8	98.0	98.3	98.4	1.1	2.5	1.6	4.2	50
37.5	735	856	225	370	97.4	98.3	98.5	98.4	1.2	2.6	2.8	4.0	50

Type EPT 115°C Rise ③

	Weight Lbs		Losses in Watts		Efficiency				% Regulation		% Impedance ②		
kVA	Al	Cu	No Load	Total	1/4 Load	1/2 Load	3/4 Load	Full Load	100% P.F.	80% P.F.	Min.	Max.	Sound Level dB
3	116	123	110	165	87.3	92.6	94.3	94.9	2.1	6.1	2.4	8.0	45
6	143	153	145	275	90.9	94.5	95.5	95.7	2.2	3.1	2.9	4.9	45
9	166	178	195	375	91.6	95.0	95.9	96.1	2.0	2.8	2.0	3.6	45
15	275	300	265	545	93.0	95.7	96.5	96.6	1.9	3.1	1.9	3.9	50
30	422	504	250	665	96.5	97.7	98.0	97.9	1.5	2.5	1.8	3.8	50
45	660	745	300	740	97.2	98.2	98.4	98.5	1.0	2.1	1.8	4.0	50
75	1275	1450	400	945	97.7	98.6	98.8	98.8	0.8	1.6	1.7	3.4	55

Notes

① Typical values for aluminum windings. Contact Eaton for values of copper windings. Up-to-date design data is available at www.eaton.com.

② Actual impedance may be ± 7.5%.

③ Type EPT transformers 3–15 kVA are T-T connected.

Performance data is based upon 480 volt Delta primary and a 208Y/120 volt secondary for three-phase transformers; 240 x 480 volt primary and a 120/240 volt secondary for single-phase transformers. All data is subject to future revision. Refer to Eaton for 5 kV class information. All data is subject to future revision.

Typical Data for 600-Volt Class General-Purpose Dry-Type Transformers, Aluminum Wound

Type DS-3 150°C Rise NEMA TP-1 Efficient

		Losses in Watts		Efficiency (Trise +20°)				% Regulation							Inrush	
kVA	Weight	No Load	Total at Rise +20	25%	50%	75%	Full Load	100% PF	80% PF	% Imp. Trise +20	X Trise +20	R Trise +20	Sound Level dB	TP1 Efficiency	Absolute Max.	Practical Max.
15	196	80	518	97.5	97.7	97.3	96.7	2.0	2.5	3.46	1.9	2.9	45	97.70	910	303
25	261	110	736	98.2	98.2	97.8	97.3	1.6	2.1	2.97	1.6	2.5	45	98.00	1477	492
38	304	132	1141	98.3	98.1	97.7	97.1	1.8	3.8	4.85	4.0	2.7	45	98.20	1056	352
50	396	145	1699	98.4	98.1	97.5	96.8	2.1	4.2	5.32	4.3	3.1	45	98.30	1078	359
75	688	260	1622	98.4	98.6	98.3	97.9	1.5	2.7	3.46	2.9	1.8	50	98.50	3428	1143
100	699	300	2527	98.5	98.4	98.1	97.6	1.9	4.0	5.17	4.7	2.2	50	98.60	2596	865
167	1610	900	3987	68.7	98.7	98.4	98.0	1.4	6.8	9.70	9.5	1.8	55	98.70	1250	416

Type DS-3 115°C Rise NEMA TP-1 Efficient

		Losses in Watts		Efficiency (Trise +20°)				% Regulation							Inrush	
kVA	Weight	No Load	Total at Rise +20	25%	50%	75%	Full Load	100% PF	80% PF	% Imp. Trise +20	X Trise +20	R Trise +20	Sound Level dB	TP1 Efficiency	Absolute Max.	Practical Max.
15	246	80	519	97.8	97.8	97.3	96.8	2.1	3.1	3.9	2.6	2.9	45	97.70	773	244
25	373	300	766	97.7	98.1	98.0	97.7	1.4	2.8	3.3	2.8	1.9	45	98.00	1102	367
37.5	380	125	1182	98.2	98.4	98.1	97.8	2.0	3.1	4.1	2.9	2.8	45	98.20	616	205
50	590	300	417	98.4	98.3	97.9	97.4	1.8	4.1	5.2	5.2	0.2	45	98.30	1553	511
75	689	170	2356	98.5	98.2	97.6	97.0	2.7	5.6	6.9	6.3	2.9	50	98.50	1717	572

Type DS-3 80°C Rise NEMA TP-1 Efficient

		Losses in Watts		Efficiency (Trise +20°)				% Regulation							Inrush	
kVA	Weight	No Load	Total at Rise +20	25%	50%	75%	Full Load	100% PF	80% PF	% Imp. Trise +20	X Trise +20	R Trise +20	Sound Level dB	TP1 Efficiency	Absolute Max.	Practical Max.
15	360	115	269	97.4	98.3	98.4	98.4	0.8	1.7	2.0	1.8	1.0	45	97.70	1381	460
25	370	120	580	97.8	98.2	98.0	97.8	1.5	3.2	3.9	3.4	1.8	45	98.00	1046	348
37.5	565	150	834	98.1	98.4	98.1	97.8	1.5	3.3	4.1	3.6	1.8	45	98.20	1471	490
50	680	175	1014	98.4	98.5	98.4	98.1	1.5	3.4	4.2	3.9	1.7	45	98.30	1733	577
75	900	260	1387	98.3	98.6	98.5	98.2	1.4	3.5	4.3	4.0	1.5	50	98.50	2423	807

Type DT-3 150°C Rise NEMA TP-1 Efficient

		Losses in Watts		Efficiency (Trise +20°)				% Regulation							Inrush	
kVA	Weight	No Load	Total at Rise +20	25%	50%	75%	Full Load	100% PF	80% PF	% Imp. Trise +20	X Trise +20	R Trise +20	Sound Level dB	TP1 Efficiency	Absolute Max.	Practical Max.
15	204	95	778	96.6	96.7	96.0	95.1	4.8	4.0	4.8	1.4	4.6	45	97.00	382	127
30	291	165	1207	97.2	97.3	96.9	96.2	3.7	5.6	4.6	3.0	3.5	45	97.50	479	159
37.5	381	210	1428	97.5	97.5	97.0	96.4	3.5	5.5	4.5	3.1	3.2	45	97.70	484	161
45	351	210	1911	97.5	97.4	96.7	96.0	3.8	6.3	5.1	3.4	3.8	45	97.70	564	188
50	531	270	1316	97.7	98.1	97.9	97.5	2.2	4.0	3.2	2.4	2.1	45	98.00	999	333
75	553	300	2917	97.9	97.7	97.0	96.3	3.6	6.6	5.3	4.0	3.5	50	98.00	561	187
112.5	793	400	3693	98.0	98.0	97.5	96.9	3.2	7.5	6.0	5.2	2.9	50	98.20	1049	350
150	913	490	4923	98.2	98.0	97.5	96.9	3.2	6.5	5.3	4.4	3.0	50	98.30	1518	506
225	1343	650	6476	98.4	98.2	97.8	97.2	2.8	6.3	5.1	4.4	2.6	55	98.50	2204	734
300	1597	750	8239	98.5	98.3	97.9	97.3	2.9	8.9	7.6	7.2	2.5	55	98.60	2097	699
500	2590	1400	9782	98.6	98.7	98.5	98.1	1.9	8.2	7.2	7.0	1.7	60	98.70	3769	1256
750	3340	1800	12,692	98.8	98.9	98.7	98.4	1.8	8.9	8.0	7.9	1.5	64	98.80	4521	1507

Typical Data for 600-Volt Class General-Purpose Dry-Type Transformers, Aluminum Wound

Type DT-3 115°C Rise NEMA TP-1 Efficient

		Losses in Watts		Efficiency (Trise +20°)				% Regulation		% Imp.	X	R			Inrush	
kVA	Weight	No Load	Total at Rise +20	25%	50%	75%	Full Load	100% PF	80% PF	Trise +20	Trise +20	Trise +20	Sound Level dB	TP1 Efficiency	Absolute Max.	Practical Max.
15	202	100	743	96.7	96.8	96.2	95.4	4.4	3.9	4.4	1.2	4.3	45	97.00	383	127
30	311	165	1492	97.3	97.1	96.3	95.5	4.5	4.8	4.8	1.8	4.4	45	97.50	411	137
45	418	220	1458	97.8	97.9	97.5	97.0	2.8	5.4	4.6	3.7	2.8	45	97.70	550	183
50	556	270	1211	97.6	98.1	98.0	97.7	1.9	3.7	3.2	2.6	1.9	45	98.00	892	297
75	581	300	2415	97.9	97.9	97.5	96.9	3.0	6.7	5.9	5.1	2.8	50	98.00	758	252
112.5	829	440	3209	98.0	98.1	97.8	97.3	2.6	3.6	3.1	1.9	2.5	50	98.20	1301	433
150	996	530	3781	98.1	98.3	97.9	97.5	2.4	5.8	5.2	4.7	2.2	50	98.30	1534	511
225	1569	720	5205	98.4	98.4	98.1	97.8	2.2	6.8	6.2	5.8	2.0	55	98.50	1875	631
300	1908	830	6926	98.5	98.5	98.2	97.8	2.3	6.0	5.4	4.9	2.0	55	98.60	2678	872
500	3117	1650	6968	98.5	98.9	98.8	98.7	1.2	6.6	6.6	6.5	1.1	60	98.70	3930	1310
750	4884	2000	9335	98.9	99.1	99.0	98.8	1.3	8.7	9.0	8.9	1.0	64	98.80	4458	1486

Type DT-3 80°C Rise NEMA TP-1 Efficient

		Losses in Watts		Efficiency (Trise +20°)				% Regulation		% Imp.	X	R			Inrush	
kVA	Weight	No Load	Total at Rise +20	25%	50%	75%	Full Load	100% PF	80% PF	Trise +20	Trise +20	Trise +20	Sound Level dB	TP1 Efficiency	Absolute Max.	Practical Max.
15	276	165	551	96.7	97.4	97.2	96.8	3.4	3.9	3.5	2.3	2.6	45	97.00	358	119
30	350	180	904	97.3	97.8	97.6	97.2	2.5	3.9	3.4	2.5	2.4	45	97.50	337	112
45	540	290	1027	97.7	98.2	98.2	97.9	1.7	3.5	3.3	2.9	1.6	45	97.70	953	317
75	810	360	1782	97.8	98.2	98.0	97.7	0.3	3.5	4.3	3.9	1.9	50	98.00	1006	355
112.5	944	470	2521	98.2	98.4	98.2	97.9	1.9	4.4	4.1	3.7	1.8	50	98.20	1554	518
150	1438	650	2760	98.2	98.6	98.5	98.3	1.5	4.8	4.7	4.5	1.4	50	98.30	1665	555
225	1746	830	4047	98.3	98.6	98.5	98.3	1.6	5.5	5.6	5.4	1.4	55	98.50	2003	667
300	2400	1100	5338	98.6	99.0	99.0	98.9	1.6	5.9	6.1	5.9	1.4	55	98.60	2655	885
500	3418	1800	5858	98.6	99.0	99.0	98.9	0.9	4.9	5.4	5.3	0.8	60	98.70	4462	1487

Type KT-4 150°C Rise NEMA TP-1 Efficient

		Losses in Watts		Efficiency (Trise +20°)				% Regulation		% Imp.	X	R			Inrush	
kVA	Weight	No Load	Total at Rise +20	25%	50%	75%	Full Load	100% PF	80% PF	Trise +20	Trise +20	Trise +20	Sound Level dB	TP1 Efficiency	Absolute Max.	Practical Max.
15	206	100	883	96.7	96.5	95.6	94.6	5.5	5.2	5.5	1.8	5.2	45	97.00	375	125
30	311	165	1263	97.2	97.3	96.7	96.0	3.9	7.4	6.0	4.8	3.7	45	97.50	453	151
45	400	220	1554	97.7	97.7	97.3	96.7	3.2	5.9	4.8	3.8	3.0	45	97.70	710	236
75	547	300	2622	97.9	97.8	97.2	96.6	3.3	6.7	5.3	4.4	3.1	50	98.00	995	331
112.5	800	440	3525	98.0	98.0	97.6	97.0	3.0	7.4	6.0	5.3	2.7	50	98.20	1082	360
150	1010	530	4055	98.1	98.2	97.8	97.4	2.6	6.6	5.4	4.8	2.3	50	98.30	1574	524
225	1680	700	5879	98.3	98.3	97.9	97.5	2.6	7.6	6.3	5.9	2.3	55	98.50	1943	647
300	2122	1100	5895	98.4	98.6	98.4	98.1	1.9	6.8	5.9	5.7	1.6	55	98.60	2863	954
500	3201	1800	7054	98.5	98.9	98.8	98.7	1.3	5.9	5.4	5.2	1.1	60	98.70	4588	1529

Typical Data for 600-Volt Class General-Purpose Dry-Type Transformers, Aluminum Wound

Type KT-4 115°C Rise NEMA TP-1 Efficient

		Losses in Watts		Efficiency (Trise +20°)				% Regulation							Inrush	
kVA	Weight	No Load	Total at Rise +20	25%	50%	75%	Full Load	100% PF	80% PF	% Imp. Trise +20	X Trise +20	R Trise +20	Sound Level dB	TP1 Efficiency	Absolute Max.	Practical Max.
15	307	135	394	96.3	97.5	97.6	97.5	1.8	2.7	2.2	1.4	1.7	45	97.00	491	163
30	313	165	1344	97.4	97.3	96.6	95.9	4.1	5.1	4.6	2.4	3.9	45	97.50	584	194
45	400	220	1463	97.8	97.9	97.5	97.0	3.0	6.1	5.2	4.4	2.8	45	97.70	591	197
75	587	285	2355	97.9	97.9	97.5	97.0	2.9	6.7	5.9	5.2	2.8	50	98.00	823	274
112.5	947	470	2910	97.9	98.1	97.9	97.5	2.4	5.0	4.3	3.7	2.2	50	98.20	1447	482
150	1243	560	4119	98.1	98.2	97.8	97.4	2.5	6.6	5.7	5.2	2.4	50	98.30	1468	489
225	1680	700	5413	98.3	98.3	98.1	97.7	2.3	7.5	7.0	6.7	2.1	55	98.50	1719	573
300	2480	1100	5735	98.4	98.7	98.5	98.2	1.8	6.7	6.3	6.1	1.5	55	98.60	2547	849

Type KT-4 80°C Rise NEMA TP-1 Efficient

		Losses in Watts		Efficiency (Trise +20°)				% Regulation							Inrush	
kVA	Weight	No Load	Total at Rise +20	25%	50%	75%	Full Load	100% PF	80% PF	% Imp. Trise +20	X Trise +20	R Trise +20	Sound Level dB	TP1 Efficiency	Absolute Max.	Practical Max.
15	378	165	416	96.4	97.6	97.7	97.6	1.7	2.9	2.5	1.9	1.7	45	97.00	482	160
30	365	188	877	97.2	97.7	97.6	97.2	2.4	3.9	3.5	2.6	2.3	45	97.50	583	194
45	550	285	1055	97.4	98.1	98.0	97.8	1.8	3.7	3.4	2.9	1.7	45	97.70	708	236
75	774	360	1784	97.8	98.2	98.0	97.7	2.0	4.7	4.5	4.0	1.9	50	98.00	986	328
112.5	1380	550	1872	97.9	98.5	98.5	98.4	1.3	4.2	4.2	4.1	1.2	50	98.20	1577	525
150	1604	700	2728	98.0	98.5	98.5	98.3	1.4	4.4	4.5	4.3	1.4	50	98.30	1880	626
225	2336	850	3728	98.4	98.7	98.6	98.4	1.4	5.0	5.2	5.1	1.3	55	98.50	2647	882
300	2689	1100	4589	98.4	98.8	98.7	98.5	1.4	5.5	5.8	5.6	1.2	55	98.60	2610	870

Type KT-13 150°C Rise NEMA TP-1 Efficient

		Losses in Watts		Efficiency (Trise +20°)				% Regulation							Inrush	
kVA	Weight	No Load	Total at Rise +20	25%	50%	75%	Full Load	100% PF	80% PF	% Imp. Trise +20	X Trise +20	R Trise +20	Sound Level dB	TP1 Efficiency	Absolute Max.	Practical Max.
15	271	165	604	96.7	97.3	97.0	96.5	3.1	4.2	3.6	2.1	2.9	45	97.00	379	126
30	365	198	977	97.1	97.6	97.3	96.9	2.7	4.3	3.5	2.4	2.6	45	97.50	565	188
45	545	280	1215	97.5	98.0	97.8	97.4	2.2	4.2	3.3	2.6	2.1	45	97.70	890	277
75	812	360	2139	97.7	98.0	97.8	97.4	2.6	5.9	4.9	4.3	2.4	50	98.00	907	302
112.5	920	490	3059	98.0	98.2	97.8	97.4	2.4	5.0	4.1	3.4	2.3	50	98.20	1513	504
150	1221	530	4297	98.1	98.1	97.7	97.2	2.7	6.5	5.3	4.6	2.5	50	98.30	1790	597
225	1960	830	4461	98.3	98.6	98.3	98.0	1.9	6.6	6.1	5.9	1.6	55	98.50	1771	590
300	2358	1100	5931	98.4	98.6	98.4	98.2	1.9	7.2	6.3	6.0	1.6	55	98.60	2543	847

Typical Data for 600-Volt Class General-Purpose Dry-Type Transformers, Aluminum Wound

Type KT-13 115°C Rise NEMA TP-1 Efficient

		Losses in Watts		Efficiency (Trise +20°)				% Regulation		% Imp.	X	R			Inrush	
kVA	Weight	No Load	Total at Rise +20	25%	50%	75%	Full Load	100% PF	80% PF	Trise +20	Trise +20	Trise +20	Sound Level dB	TP1 Efficiency	Absolute Max.	Practical Max.
15	332	165	432	96.6	97.6	97.6	97.4	1.9	3.2	2.8	2.2	1.8	45	97.00	409	136
30	390	200	903	97.3	97.8	97.6	97.2	2.5	4.4	3.6	2.8	2.3	45	97.50	420	120
45	548	280	1187	97.5	98.1	98.0	97.7	2.2	—	3.0	2.3	2.0	45	97.70	836	278
75	808	360	1850	97.8	98.1	97.8	97.5	2.4	5.6	4.8	4.3	2.2	50	98.00	805	268
112.5	990	540	2373	97.9	98.3	98.2	98.0	1.8	4.5	4.0	3.6	1.6	50	98.20	1303	434
150	1600	650	2372	98.1	98.5	98.4	98.1	1.3	3.4	3.0	2.8	1.1	50	98.30	1932	644
225	2306	850	4001	98.3	98.7	98.6	98.3	1.6	4.9	5.1	4.9	1.4	55	98.50	2508	836
300	3291	1100	4583	98.4	98.8	98.7	98.5	1.3	6.2	6.3	6.2	1.2	55	98.60	2851	950

Type KT-13 80°C Rise NEMA TP-1 Efficient

		Losses in Watts		Efficiency (Trise +20°)				% Regulation		% Imp.	X	R			Inrush	
kVA	Weight	No Load	Total at Rise +20	25%	50%	75%	Full Load	100% PF	80% PF	Trise +20	Trise +20	Trise +20	Sound Level dB	TP1 Efficiency	Absolute Max.	Practical Max.
15	315	165	536	96.4	97.3	97.2	96.9	2.5	3.9	3.6	2.5	2.5	45	97.00	375	125
30	408	188	854	97.4	97.9	97.7	97.3	2.3	4.0	3.6	2.8	2.2	45	97.50	497	166
45	555	280	982	97.6	98.2	98.2	98.0	1.6	3.2	3.0	2.5	1.6	45	97.70	656	218
75	838	400	1289	97.8	98.4	98.5	98.4	1.3	3.0	2.9	2.6	1.2	50	98.00	1624	541
112.5	1367	550	1905	97.9	98.5	98.5	98.4	1.3	4.2	4.4	4.2	1.2	50	98.20	1171	390
150	1607	668	2474	98.2	98.6	98.6	98.4	1.4	4.6	4.7	4.5	1.2	50	98.30	1562	520
225	2582	850	3471	98.3	98.7	98.7	98.5	1.3	5.1	6.3	6.2	1.2	55	98.50	2159	719
300	3228	1100	3978	98.3	98.8	98.8	98.7	1.1	4.2	4.5	4.3	1.0	55	98.60	3255	1085

Typical Data for 600-Volt Class General-Purpose Dry-Type Transformers, Copper Wound

Type DS-3 150°C Rise NEMA TP-1 Efficient

		Losses in Watts		Efficiency (Trise +20°)				% Regulation							Inrush	
kVA	Weight	No Load	Total at Rise +20	25%	50%	75%	Full Load	100% PF	80% PF	% Imp.	X	R	Sound Level dB	TP1 Efficiency	Absolute Max.	Practical Max.
15	270	80	605	97.6	97.5	96.9	96.3	3.5	4.2	4.2	2.3	3.5	45	97.70	551	183
25	406	115	732	97.9	98.1	97.7	97.3	—	—	3.5	2.5	2.5	45	98.00	1379	459
37.5	453	125	1154	98.2	98.1	97.6	97.0	2.7	3.7	4.8	4.0	2.7	45	98.20	1321	440
50	657	160	1159	98.3	98.4	98.1	97.7	2.0	3.3	3.8	3.8	2.0	45	98.30	1321	440
75	803	175	2259	98.5	98.3	97.7	97.1	2.8	4.8	6.5	5.8	2.8	50	98.50	2133	711
100	960	250	2504	98.6	98.4	98.0	97.5	2.3	4.3	5.5	5.0	2.3	50	98.60	2779	926
167	1665	570	3094	98.7	98.8	98.6	98.3	1.5	6.3	9.0	8.8	1.5	50	98.70	2865	955

Type DS-3 115°C Rise NEMA TP-1 Efficient

		Losses in Watts		Efficiency (Trise +20°)				% Regulation							Inrush	
kVA	Weight	No Load	Total at Rise +20	25%	50%	75%	Full Load	100% PF	80% PF	% Imp.	X	R	Sound Level dB	TP1 Efficiency	Absolute Max.	Practical Max.
15	264	80	437	97.8	98.1	97.8	97.3	2.4	2.2	3.3	2.2	2.4	45	97.70	718	239
25	420	110	603	97.9	98.2	98.0	97.7	2.0	2.9	3.2	2.6	2.0	45	98.00	862	287
37.5	450	125	1217	98.2	98.0	97.5	96.9	2.9	4.5	5.9	5.1	2.9	45	98.20	1300	433
50	703	300	1409	98.4	98.4	98.0	97.6	2.2	3.8	4.7	4.1	2.2	—	98.30	1498	499
75	793	175	2178	98.5	98.3	97.8	97.2	2.7	4.7	6.2	5.6	2.7	50	98.50	2107	702

Type DS-3 80°C Rise NEMA TP-1 Efficient

		Losses in Watts		Efficiency (Trise +20°)				% Regulation							Inrush	
kVA	Weight	No Load	Total at Rise +20	25%	50%	75%	Full Load	100% PF	80% PF	% Imp.	X	R	Sound Level dB	TP1 Efficiency	Absolute Max.	Practical Max.
15	407	115	293	97.3	98.2	98.3	98.2	1.2	1.7	1.8	1.4	1.2	45	97.70	375	125
25	430	300	679	97.9	98.4	98.3	98.1	1.5	2.6	3.0	2.6	1.5	45	98.00	494	164
37.5	685	300	729	98.1	98.6	98.6	98.5	1.1	2.2	2.6	2.3	1.1	45	98.20	617	205
50	799	180	1013	98.3	98.6	98.4	98.1	1.7	2.9	3.4	2.9	1.7	45	98.30	989	329
75	1042	250	1447	98.3	98.6	98.4	98.1	1.6	3.4	3.8	3.5	1.6	50	98.50	1015	338

Type DT-3 150°C Rise NEMA TP-1 Efficient

		Losses in Watts		Efficiency (Trise +20°)				% Regulation							Inrush	
kVA	Weight	No Load	Total at Rise +20	25%	50%	75%	Full Load	100% PF	80% PF	% Imp.	X	R	Sound Level dB	TP1 Efficiency	Absolute Max.	Practical Max.
15	250	150	755	98.9	97.0	96.4	95.7	4.2	5.3	4.8	2.6	4.0	45	97.00	321	107
30	350	165	1100	97.3	97.5	97.0	96.5	3.2	4.5	5.2	4.1	3.1	45	97.50	614	204
37.5	415	210	1382	97.5	97.6	97.1	96.5	3.2	4.8	4.0	2.5	3.1	45	97.70	639	213
45	416	215	1786	97.4	97.4	96.9	96.2	3.6	5.5	4.6	3.0	3.5	45	97.70	637	212
50	647	270	1220	97.7	98.2	98.0	97.7	2.0	3.5	2.8	2.0	1.9	45	98.00	1072	357
75	643	320	2903	97.9	97.5	97.1	96.4	3.6	7.4	4.3	2.5	3.4	50	98.00	1015	338
112.5	876	420	3699	97.9	97.9	97.4	96.8	3.0	6.7	5.1	4.2	2.9	50	98.20	1185	395
150	1064	530	4269	98.1	98.2	97.8	97.3	2.7	5.3	4.3	3.5	2.5	50	98.30	1752	584
225	1569	560	7124	98.4	98.1	97.5	97.0	3.2	8.7	7.4	6.8	2.9	55	98.50	2498	832
300	2050	730	7959	98.4	98.3	97.9	97.4	2.6	6.7	5.5	4.9	2.4	55	98.60	2872	964
500	3681	1400	8292	98.8	98.9	98.7	98.4	1.6	7.4	6.8	6.7	1.4	60	98.70	3839	1279

Typical Data for 600-Volt Class General-Purpose Dry-Type Transformers, Copper Wound

Type DT-3 115°C Rise NEMA TP-1 Efficient

		Losses in Watts		Efficiency (Trise +20°)				% Regulation							Inrush	
kVA	Weight	No Load	Total at Rise +20	25%	50%	75%	Full Load	100% PF	80% PF	% Imp.	X	R	Sound Level dB	TP1 Efficiency	Absolute Max.	Practical Max.
15	256	95	669	97.7	97.8	97.3	96.7	4.0	5.4	4.8	2.9	3.8	45	97.00	229	76
30	337	180	1077	97.7	97.8	97.3	96.8	3.0	6.2	4.6	3.5	3.0	45	97.50	433	144
45	446	215	1625	97.7	97.7	97.2	96.6	3.2	5.2	4.4	3.1	3.1	45	97.70	658	219
50	630	270	1213	97.8	98.2	98.0	97.7	2.0	3.5	3.0	2.3	1.9	45	98.00	960	320
75	662	320	2346	97.9	98.0	97.6	97.0	2.8	5.4	4.7	3.9	2.7	50	98.00	842	280
112.5	914	400	2953	98.1	98.2	97.9	97.4	2.5	5.7	5.0	4.5	2.3	50	98.20	1036	345
150	1132	530	3364	98.3	98.5	98.2	97.8	2.0	4.8	4.4	4.0	1.9	50	98.30	1605	535
225	2036	650	6445	98.4	98.3	97.8	97.3	2.9	8.8	8.1	7.7	2.6	55	98.50	1572	524
300	2325	830	6038	98.6	98.7	98.4	98.1	2.0	5.7	5.2	4.9	1.7	55	98.60	1860	620
500	3681	1400	7841	98.8	98.9	98.7	98.5	1.4	6.8	6.8	6.6	1.3	60	98.70	4033	1344

Type DT-3 80°C Rise NEMA TP-1 Efficient

		Losses in Watts		Efficiency (Trise +20°)				% Regulation							Inrush	
kVA	Weight	No Load	Total at Rise +20	25%	50%	75%	Full Load	100% PF	80% PF	% Imp.	X	R	Sound Level dB	TP1 Efficiency	Absolute Max.	Practical Max.
15	349	135	390	96.6	97.7	97.7	97.6	1.8	2.4	2.1	1.3	1.7	45	97.00	449	150
30	410	210	823	97.3	97.9	97.7	97.4	2.1	3.4	3.0	2.1	2.0	45	97.50	493	164
45	504	200	1308	97.9	98.0	97.7	97.2	2.5	4.5	3.9	3.1	2.5	45	97.70	473	158
75	818	370	1837	97.9	98.2	98.0	97.7	2.0	9.3	4.3	3.8	2.0	50	98.00	937	312
112.5	1065	440	2409	98.1	98.3	98.0	97.6	1.8	3.8	3.3	2.8	1.8	50	98.20	1754	584
150	1410	650	3349	98.3	98.5	98.3	97.9	1.9	3.9	3.7	3.2	1.8	50	98.30	1593	531
225	2030	830	4096	98.4	98.7	98.5	98.3	1.6	5.4	5.4	5.2	1.5	55	98.50	2568	856
300	3041	1100	4646	98.5	98.8	98.7	98.5	1.4	5.6	6.1	6.0	1.2	55	98.60	3753	1251

Type KT-4 80°C Rise NEMA TP-1 Efficient

		Losses in Watts		Efficiency (Trise +20°)				% Regulation							Inrush	
kVA	Weight	No Load	Total at Rise +20	25%	50%	75%	Full Load	100% PF	80% PF	% Imp.	X	R	Sound Level dB	TP1 Efficiency	Absolute Max.	Practical Max.
15	251	100	635	96.8	97.1	96.6	96.0	3.7	5.0	4.2	2.1	3.6	45	97.00	265	88
30	326	165	1134	97.4	97.5	97.1	96.5	3.5	5.3	4.3	2.9	3.2	45	97.50	504	168
45	479	220	1505	97.6	97.8	97.3	96.8	3.0	5.6	5.0	4.1	2.9	45	97.70	670	223
75	463	300	2883	97.9	97.7	97.1	96.4	3.6	7.1	5.9	4.7	3.4	50	98.00	975	325
112.5	977	440	2952	98.1	98.2	97.9	97.5	2.6	6.6	5.6	5.1	2.2	50	98.20	1031	344
150	1212	540	3716	98.3	98.4	98.0	97.6	2.4	6.0	5.1	4.6	2.1	50	98.30	1574	524
225	1815	650	5420	98.4	98.5	98.1	97.7	2.4	7.6	6.5	6.2	2.1	55	98.50	1694	565
300	2400	830	6259	98.6	98.6	98.4	98.0	2.2	6.3	5.2	4.9	1.8	55	98.60	2594	864

Typical Data for 600-Volt Class General-Purpose Dry-Type Transformers, Copper Wound

Type KT-4 115°C Rise NEMA TP-1 Efficient

		Losses in Watts		Efficiency (Trise +20°)				% Regulation							Inrush	
kVA	Weight	No Load	Total at Rise +20	25%	50%	75%	Full Load	100% PF	80% PF	% Imp.	X	R	Sound Level dB	TP1 Efficiency	Absolute Max.	Practical Max.
15	256	95	702	96.7	96.9	96.3	95.6	4.2	5.7	5.0	2.9	4.0	45	97.00	279	93
30	341	165	1007	97.4	97.6	97.3	96.8	3.0	4.8	4.2	3.1	2.8	45	97.50	466	155
45	526	220	1200	97.9	98.1	97.9	97.5	2.3	5.0	4.1	3.5	2.2	50	97.70	633	211
75	759	300	1715	98.1	98.3	98.1	97.8	1.9	5.0	4.5	4.1	1.9	50	98.00	929	309
112.5	1030	470	2735	98.0	98.3	98.0	97.7	2.2	4.4	3.8	3.2	2.0	50	98.20	1171	390
150	1631	650	3076	98.2	98.5	98.3	98.1	1.7	4.9	4.5	4.2	1.6	50	98.30	1250	416
225	1965	690	4434	98.5	98.6	98.4	98.1	1.9	5.6	5.3	5.0	1.7	55	98.50	1979	659
300	2337	830	6127	98.6	98.7	98.4	98.0	2.0	5.2	4.7	4.3	1.8	55	98.60	2187	729

Type KT-4 80°C Rise NEMA TP-1 Efficient

		Losses in Watts		Efficiency (Trise +20°)				% Regulation							Inrush	
kVA	Weight	No Load	Total at Rise +20	25%	50%	75%	Full Load	100% PF	80% PF	% Imp.	X	R	Sound Level dB	TP1 Efficiency	Absolute Max.	Practical Max.
15	365	165	371	97.0	98.0	98.1	98.0	1.5	2.3	2.1	1.5	1.4	45	97.00	499	166
30	424	210	787	97.3	97.9	97.8	97.6	2.0	3.2	2.9	2.2	1.9	45	97.50	659	219
45	653	290	977	97.4	98.1	98.1	98.0	1.6	3.1	3.0	2.5	1.5	45	97.70	925	308
75	640	350	1951	97.8	98.1	97.8	97.5	2.2	5.2	4.9	4.4	2.1	50	98.00	854	284
112.5	1264	560	2009	98.2	98.7	98.6	98.4	1.4	4.3	4.2	4.0	1.3	50	98.20	1449	483
150	1825	650	2873	98.5	98.7	98.5	98.2	1.6	6.1	6.4	6.3	1.5	50	98.30	1288	429
225	2096	890	4449	98.3	98.6	98.4	98.1	1.8	6.5	6.6	6.4	1.6	55	98.50	2292	764

Type KT-13 150°C Rise NEMA TP-1 Efficient

		Losses in Watts		Efficiency (Trise +20°)				% Regulation							Inrush	
kVA	Weight	No Load	Total at Rise +20	25%	50%	75%	Full Load	100% PF	80% PF	% Imp.	X	R	Sound Level dB	TP1 Efficiency	Absolute Max.	Practical Max.
15	346	165	461	96.2	97.4	97.5	97.3	2.1	3.0	2.5	1.6	2.0	45	97.00	527	176
30	390	190	908	97.2	97.7	97.5	97.1	2.6	4.0	3.3	2.3	2.4	45	97.50	579	193
45	623	235	1328	97.6	97.9	97.6	97.2	2.5	3.2	2.8	1.4	2.4	45	97.70	854	285
75	848	370	2402	97.7	97.9	97.5	97.0	2.8	5.7	4.5	3.6	2.7	50	98.00	1046	348
112.5	1080	455	2991	98.0	98.2	97.9	97.4	2.4	4.3	3.5	2.7	2.3	50	98.20	1180	393
150	1431	600	3686	98.2	98.3	98.1	97.7	2.3	5.1	4.2	3.7	2.1	50	98.30	1250	416
225	2129	830	4250	98.4	98.6	98.4	98.2	2.0	6.3	5.4	5.1	1.5	55	98.50	2771	923

Type KT-13 115°C Rise NEMA TP-1 Efficient

		Losses in Watts		Efficiency (Trise +20°)				% Regulation							Inrush	
kVA	Weight	No Load	Total at Rise +20	25%	50%	75%	Full Load	100% PF	80% PF	% Imp.	X	R	Sound Level dB	TP1 Efficiency	Absolute Max.	Practical Max.
15	341	165	378	96.6	97.8	97.9	97.9	1.5	2.4	2.1	1.6	1.4	45	97.00	472	157
30	444	188	824	97.1	97.8	97.6	97.3	2.2	3.6	3.1	2.2	2.1	45	97.50	620	206
45	598	250	1476	97.4	97.7	97.4	96.9	2.8	4.6	4.0	2.9	2.7	45	97.70	939	313
75	894	350	2128	97.9	98.1	97.9	97.5	1.9	5.1	4.6	4.0	2.4	50	98.00	847	282
112.5	1054	460	2612	98.1	98.3	98.1	97.8	2.0	4.3	3.3	2.6	1.9	50	98.20	1375	458
150	1399	600	3185	98.2	98.5	98.3	98.0	2.0	5.9	5.4	5.1	1.7	50	98.30	1379	460
225	2088	890	4382	98.3	98.6	98.4	98.2	1.8	6.1	5.7	5.5	1.6	55	98.50	2490	830

Typical Data for 600-Volt Class General-Purpose Dry-Type Transformers, Copper Wound

Type KT-13 80°C Rise NEMA TP-1 Efficient

		Losses in Watts		Efficiency (Trise +20°)				% Regulation							Inrush	
kVA	Weight	No Load	Total at Rise +20	25%	50%	75%	Full Load	100% PF	80% PF	% Imp.	X	R	Sound Level dB	TP1 Efficiency	Absolute Max.	Practical Max.
15	370	165	382	96.7	97.8	97.9	97.8	1.5	2.4	2.2	1.6	1.4	45	97.00	472	157
30	490	188	595	97.4	98.2	98.2	98.1	1.4	3.0	2.8	2.5	1.4	45	97.50	592	197
45	635	290	1189	97.4	97.9	97.8	97.5	2.1	3.9	3.5	2.8	2.0	45	97.70	736	245
75	987	410	1351	97.7	98.9	98.4	98.3	1.4	2.8	2.6	2.3	1.3	50	98.00	1590	530
112.5	854	560	2039	98.1	98.6	98.5	98.3	1.4	4.2	4.3	4.1	1.3	50	98.20	1374	458
150	1807	650	3053	98.0	98.4	98.3	98.0	1.7	4.3	4.0	3.7	1.6	50	98.30	1472	490
225	4091	1200	2364	98.2	98.9	99.1	99.1	0.6	2.7	2.9	2.8	0.5	55	98.50	4321	1440

Type KT-13 115°C Rise E3 Efficient

		Losses in Watts		Efficiency (Trise +20°)				% Regulation							Inrush	
kVA	Weight	No Load	Total at Rise +20	25%	50%	75%	Full Load	100% PF	80% PF	% Imp.	X	R	Sound Level dB	TP1 Efficiency	Absolute Max.	Practical Max.
15	3.25	78	359	97.6	98.1	98.0	97.7	2.0	3.7	3.2	2.6	1.9	45	98.00	307	102
30	370	125	636	98.1	98.4	98.3	98.0	1.7	2.7	2.3	1.6	1.7	45	98.30	779	260
45	635	135	1076	98.5	98.5	98.1	97.7	2.2	4.1	3.5	2.8	2.1	45	98.50	617	206
75	870	225	1529	98.5	98.6	98.4	98.0	1.9	4.9	4.4	4.1	1.7	50	98.60	993	331
112.5	1526	350	1768	98.6	98.8	98.7	98.5	1.3	3.5	3.1	2.8	1.3	50	98.80	2447	816
150	1665	350	2419	97.8	98.9	98.7	98.4	1.5	4.5	4.2	3.9	1.4	50	98.90	1976	659
225	2094	650	3650	98.9	98.9	98.8	98.5	1.5	5.4	5.2	5.1	1.3	55	99.00	2686	895
300	3900	750	3731	98.9	99.1	99.0	98.8	1.3	5.2	5.2	5.1	1.0	55	99.04	2990	997

Type KT-9 115°C Rise E3 Efficient

		Losses in Watts		Efficiency (Trise +20°)				% Regulation							Inrush	
kVA	Weight	No Load	Total at Rise +20	25%	50%	75%	Full Load	100% PF	80% PF	% Imp.	X	R	Sound Level dB	TP1 Efficiency	Absolute Max.	Practical Max.
15	335	78	353	97.4	98.0	98.0	97.7	2.0	3.7	3.2	2.6	1.8	45	98.00	287	96
30	406	125	670	98.0	98.3	98.1	97.8	1.9	2.7	2.4	1.5	1.8	45	98.30	780	260
45	635	135	1075	98.6	98.5	98.2	97.7	2.3	4.1	3.5	2.8	2.1	45	98.50	603	201
75	870	210	1551	98.5	98.6	98.3	98.0	1.9	4.0	3.6	3.1	1.8	50	98.60	958	319
112.5	1526	350	1583	98.6	98.9	98.8	98.6	1.2	3.0	2.7	2.5	1.1	50	98.80	2480	827
150	1665	350	2463	98.8	98.9	98.7	98.4	1.6	4.5	4.2	4.0	1.4	50	98.90	1930	643
225	2094	650	3766	98.8	98.9	98.7	98.4	1.7	5.5	5.2	5.0	1.4	55	99.00	2778	926

Typical Data for 600-Volt Class General-Purpose Dry-Type Transformers, Copper Wound

Type NON HMT 115°C Rise NEMA TP-1 Efficient

		Losses in Watts		Efficiency (Trise +20°)				% Regulation							Inrush	
kVA	Weight	No Load	Total at Rise +20	25%	50%	75%	Full Load	100% PF	80% PF	% Imp.	X	R	Sound Level dB	TP1 Efficiency	Absolute Max.	Practical Max.
15	362	80	527	97.6	97.7	97.3	96.7	3.2	5.9	5.1	4.2	3.0	45	97.00	—	—
30	430	100	1040	98.3	98.0	97.4	96.7	3.2	6.2	5.4	4.4	3.1	45	97.50	—	—
45	627	170	1368	98.3	98.2	97.7	97.2	2.8	6.0	5.2	4.4	2.7	45	97.70	—	—
75	926	250	2096	98.4	98.3	97.9	97.4	2.6	7.0	6.2	5.7	2.5	50	98.00	—	—
112.5	1628	400	2515	98.4	98.5	98.3	97.9	2.0	5.5	4.9	4.5	1.9	50	98.20	—	—
150	2001	500	2688	98.5	98.7	98.6	98.3	1.6	5.6	5.2	5.0	1.5	50	98.30	—	—
225	3596	590	3310	98.8	98.9	98.8	98.6	1.5	6.2	6.0	5.9	1.2	55	98.50	—	—
300	3891	800	4854	98.7	98.9	98.7	98.4	1.7	7.1	7.0	6.8	1.4	55	98.60	—	—

Type THR HMT 115°C Rise NEMA TP-1 Efficient

		Losses in Watts		Efficiency (Trise +20°)				% Regulation							Inrush	
kVA	Weight	No Load	Total at Rise +20	25%	50%	75%	Full Load	100% PF	80% PF	% Imp.	X	R	Sound Level dB	TP1 Efficiency	Absolute Max.	Practical Max.
15	—	80	708	97.1	97.0	96.4	95.5	4.3	7.4	6.3	4.7	4.2	45	97.00	—	—
30	450	100	1409	98.0	97.4	96.5	95.6	4.7	8.0	6.8	5.2	4.4	45	97.50	—	—
45	610	170	1374	98.2	98.1	97.7	97.1	2.8	4.8	4.2	3.2	2.7	45	97.70	—	—
75	868	250	2341	98.2	98.1	97.6	97.0	2.9	6.6	5.8	5.0	2.8	50	98.00	—	—
112.5	1643	400	2685	98.3	98.4	98.1	97.7	2.2	5.5	5.0	4.6	2.0	50	98.20	—	—
150	—	500	3304	98.5	98.6	98.3	97.9	2.0	6.7	6.3	6.0	1.9	50	98.30	—	—
225	3370	590	3712	98.7	98.8	98.7	98.4	1.7	6.6	6.4	6.2	1.4	55	98.50	—	—
300	3894	800	4688	98.9	99.0	98.8	98.5	1.7	7.4	7.2	7.1	1.3	55	98.60	—	—

Typical Specifications—General-Purpose (1000 kVA and Below)

General

Furnish and install, single-phase and three-phase general-purpose individually mounted dry-type transformers of the two-winding type, self-cooled, with ratings and voltages as indicated on the drawings. Transformers shall be manufactured by Eaton.

Transformers shall be designed, manufactured and tested in accordance with all the latest applicable ANSI, NEMA and IEEE Standards. All 600-volt class transformers through 1000 kVA shall be UL listed and bear the UL label.

Transformers shall be designed for continuous operation at rated kVA, for operation 24 hours a day, 365 days a year, with normal life expectancy as defined in ANSI C57.96.

Insulation Systems

Transformers shall be insulated as follows:

- **Type EP or EPT:** 0.050 through 75 kVA: 180°C insulation system
- **Type DS-3 or DT-3:** 15 kVA and above: 220°C insulation system

Required performance shall be obtained without exceeding the above indicated temperature rise in a 40°C maximum ambient, with a 30°C average over 24 hours.

All insulation materials shall be flame-retardant and shall not support combustion as defined in ASTM Standard Test Method D635.

Core and Coil Assemblies

Transformer core shall be constructed with high-grade, non-aging, silicon steel with high magnetic permeability, and low hysteresis and eddy current losses. Maximum magnetic flux densities shall be substantially below the saturation point. The transformer core volume shall allow efficient transformer operation at 10% above the nominal tap voltage. The core laminations shall be tightly clamped and compressed. Coils shall be wound of electrical-grade [aluminum] [copper] and continuous wound construction. BIL (basic impulse level) for all 600-volt class windings shall be 10 kV.

On encapsulated units rated [75 kVA and below] [15 kVA and below] [9 kVA and below], the core and coil assembly shall be completely encapsulated in a proportioned mixture of resin or epoxy and aggregate to provide a moisture-proof, shock-resistant seal. The core and coil encapsulation system shall minimize the sound level.

On ventilated units rated [15 kVA and above] [30 kVA and above] [112.5 kVA and above], the core and coil assembly shall be installed on vibration-absorbing pads.

Enclosures

The enclosure shall be made of heavy-gauge steel and shall be finished using a continuous process of degreasing, cleaning and phosphatizing, followed by electrostatic deposition of a thermosetting polyester powder coating and subsequent baking. The coating color shall be ANSI 61 and shall be UL recognized for outdoor use. The maximum temperature on top of the enclosure shall not exceed 90°C.

On units rated [75 kVA and below] [15 kVA and below] [9 kVA and below] encapsulated, the enclosure construction shall be totally enclosed, non-ventilated, NEMA 3R, with lifting provisions.

On units rated [15 kVA and above] [30 kVA and above] [112.5 kVA and above], the enclosure construction shall be ventilated, NEMA 2, drip-proof, with lifting provisions. All ventilation openings shall be protected against falling dirt. On outdoor units, provide suitable weathershields over ventilation openings. **To ensure proper ventilation, locate the unit at least 6 inches (152.4 mm) from the adjacent wall or structure**.

Tests

The following tests shall be performed as standard on all transformers:

1. Ratio tests at the rated voltage connection and at all tap connections.
2. Polarity and phase relation tests on the rated voltage connection.
3. Applied potential tests.
4. Induced potential test.
5. No-load and excitation current at rated voltage on the rated voltage connection.

Sound Levels

Transformer average sound levels shall not exceed the following ANSI and NEMA levels for self-cooled ratings measured in accordance with NEMA ST-20.

Average Sound Levels

NEMA ST-20 Average Sound Level, dB

Equivalent Winding kVA Range	Self-Cooled Ventilated (up to 1.2 kV) K-Factor 1, 4, 9	Self-Cooled Ventilated (up to 1.2 kV) K-Factor 13, 20	Encapsulated (up to 1.2 kV)
3.00 and below	40	40	45
3.01 to 9.00	40	40	45
9.01 to 15.00	45	45	50
15.01 to 30.00	45	45	50
30.01 to 50.00	45	48	50
50.01 to 75.00	50	53	55
75.01 to 112.50	50	53	55
112.51 to 150.00	50	53	55
150.01 to 225.00	55	58	57
225.01 to 300.00	55	58	57
300.01 to 500.00	60	63	59
500.01 to 700.00	62	65	61
700.01 to 1000.00	64	67	63
Greater than 1000	Consult factory	Consult factory	Consult factory

Typical Specifications—Dry-Type Transformers for Nonlinear Loads

General

Furnish and install, individually mounted dry-type transformers of the two-winding type, self-cooled, with ratings and voltages as indicated on the drawings.

Transformers shall be manufactured by Eaton.

Transformers shall be designed, manufactured and tested in accordance with all the latest applicable ANSI, NEMA and IEEE Standards. All 600-volt class transformers through 500 kVA shall be UL listed as suitable for non-sinusoidal current loads with K factor not to exceed [4] [13] [20].

Insulation Systems

Transformers shall be insulated with a UL recognized 220°C insulation system. Winding temperature rise shall be [80°C] [115°C] [150°C].

Required performance shall be obtained without exceeding the above indicated temperature rise in a 40°C maximum ambient, with a 30°C average.

All insulation materials shall be flame-retardant and shall not support combustion as defined in ASTM Standard Test Method D635.

Core and Coil Assemblies

Transformer core shall be constructed with high-grade, non-aging, silicon steel with high magnetic permeability, and low hysteresis and eddy current losses. Maximum magnetic flux densities shall be substantially below the saturation point. The transformer core volume shall allow efficient transformer operation at 10% above the nominal tap voltage. The core laminations shall be tightly clamped and compressed.

Transformer coils shall be wound of electrical-grade [aluminum] [copper] conductor with continuous wound construction. An electrostatic shield consisting of a single turn of aluminum shall be placed between the primary and secondary winding and grounded to the transformer core. BIL (basic impulse level) for all 600-volt class windings shall be 10 kV.

The core and coil assembly shall be installed on vibration-absorbing pads.

The neutral conductor shall be rated to carry 200% of normal phase current.

Enclosures

The enclosure shall be made of heavy gauge steel and shall be finished utilizing a continuous process of degreasing, cleaning and phosphatizing, followed by electrostatic deposition of a polymer polyester powder coating and baking. The coating color shall be ANSI 61 and shall be UL recognized for outdoor use. The maximum temperature on top of the enclosure shall not exceed 90°C.

The enclosure construction shall be ventilated, NEMA 2, drip-proof, with lifting provisions. All ventilation openings shall be protected against falling dirt. On outdoor units, provide suitable weathershields over ventilation openings. **To ensure proper ventilation, locate the unit at least 6 inches (152.4 mm) from the adjacent wall or structure.**

Nonlinear Ratings

The transformers shall be specifically designed to supply circuits with a harmonic profile equal to or less than a K-factor of 4 or 13 as described below without exceeding [80°C] [115°C] [150°C] temperature rise.

Nonlinear Ratings

Harmonic	K-4	K-13
Fundamental	100.0%	100.0%
3rd	34.0%	70.0%
5th	22.0%	42.0%
7th	3.0%	5.0%
9th	1.0%	3.0%
11th	0.7%	3.0%
13th	0.5%	1.0%
15th	0.3%	0.7%
17th	0.3%	0.6%

Tests

The following tests shall be performed as standard on all transformers:

1. Ratio tests at the rated voltage connection and at all tap connections.
2. Polarity and phase relation tests on the rated voltage connection.
3. Applied potential tests.
4. Induced potential test.
5. No-load and excitation current at rated voltage on the rated voltage connection.

Sound Levels

Transformer average sound levels shall not exceed the following ANSI and NEMA levels for self-cooled ratings measured in accordance with NEMA ST-20.

Average Sound Levels

NEMA ST-20 Average Sound Level, dB

Equivalent Winding kVA Range	Self-Cooled Ventilated (up to 1.2 kV) K-Factor 1, 4, 9	Self-Cooled Ventilated (up to 1.2 kV) K-Factor 13, 20	Encapsulated (up to 1.2 kV)
3.00 and below	40	40	45
3.01 to 9.00	40	40	45
9.01 to 15.00	45	45	50
15.01 to 30.00	45	45	50
30.01 to 50.00	45	48	50
50.01 to 75.00	50	53	55
75.01 to 112.50	50	53	55
112.51 to 150.00	50	53	55
150.01 to 225.00	55	58	57
225.01 to 300.00	55	58	57
300.01 to 500.00	60	63	59
500.01 to 700.00	62	65	61
700.01 to 1000.00	64	67	63
Greater than 1000	Consult factory	Consult factory	Consult factory

Typical Specification—AC Adjustable Frequency Drive Isolation Transformers

General

Furnish and install, single-phase and three-phase general-purpose individually mounted dry-type transformers of the two-winding type, self-cooled, with ratings and voltages for input application as indicated on the drawings. Transformers shall be manufactured by Eaton.

Transformers shall be designed, manufactured and tested in accordance with all the latest applicable ANSI, NEMA and IEEE Standards. All 600-volt class transformers through 550 kVA shall be UL listed and bear the UL label.

Transformers shall be designed for continuous operation at rated kVA, for operation 24 hours a day, 365 days a year, with normal life expectancy as defined in ANSI C57.96.

Insulation Systems

Transformers shall be insulated with a UL recognized 220°C insulation system.

Required performance shall be obtained without exceeding the above indicated temperature rise in a 40°C maximum ambient, with a 30°C average over 24 hours.

All insulation materials shall be flame-retardant and shall not support combustion as defined in ASTM Standard Test Method D635.

Core and Coil Assemblies

Transformer core shall be constructed with high-grade, non-aging, silicon steel with high magnetic permeability, and low hysteresis and eddy current losses. Maximum magnetic flux densities shall be substantially below the saturation point. The transformer core volume shall allow efficient transformer operation at 10% above the nominal tap voltage. The core laminations shall be tightly clamped and compressed. Coils shall be wound of electrical-grade [aluminum] [copper] and continuous wound construction. BIL (basic impulse level) for all 600-volt class windings shall be 10 kV.

A temperature sensing device shall be imbedded in the center coil.

The core and coil assembly shall be installed on vibration-absorbing pads.

Enclosures

The enclosure shall be made of heavy-gauge steel and shall be finished using a continuous process of degreasing, cleaning, and phosphatizing, followed by electrostatic deposition of a thermosetting polyester powder coating and subsequent baking. The coating color shall be ANSI 61 and shall be UL recognized for outdoor use. The maximum temperature on top of the enclosure shall not exceed 90°C.

The enclosure construction shall be ventilated, NEMA 2, drip-proof, with lifting provisions. All ventilation openings shall be protected against falling dirt. **To ensure proper ventilation, locate the unit at least 6 inches (152.4 mm) from the adjacent wall or structure. On outdoor units, provide suitable weathershields over ventilation openings.**

Sound Levels

Transformer average sound levels shall not exceed the following ANSI and NEMA levels for self-cooled ratings measured in accordance with NEMA ST-20.

The following table lists the recommended kVA size of the drive isolation transformer for a specific horsepower requirement.

Three-Phase

Horsepower AC Motor	kVA Minimum
5	7.5
7.5	11
10	14
15	20
20	27
25	34
30	40
40	51
50	63
60	75
75	93
100	118
125	145
150	175
200	220
250	275
300	330
400	440
500	550
600	660
700	770

Average Sound Levels

NEMA ST-20 Average Sound Level, dB

Equivalent Winding kVA Range	Self-Cooled Ventilated (up to 1.2 kV) K-Factor 1, 4, 9	Self-Cooled Ventilated (up to 1.2 kV) K-Factor 13, 20	Encapsulated (up to 1.2 kV)
3.00 and below	40	40	45
3.01 to 9.00	40	40	45
9.01 to 15.00	45	45	50
15.01 to 30.00	45	45	50
30.01 to 50.00	45	48	50
50.01 to 75.00	50	53	55
75.01 to 112.50	50	53	55
112.51 to 150.00	50	53	55
150.01 to 225.00	55	58	57
225.01 to 300.00	55	58	57
300.01 to 500.00	60	63	59
500.01 to 700.00	62	65	61
700.01 to 1000.00	64	67	63
Greater than 1000	Consult factory	Consult factory	Consult factory

Typical Specifications—Mini–Power Centers (3–30 kVA)

General

Furnish and install, single-phase and three-phase general-purpose individually mounted mini–power centers of the two-winding type, self-cooled, with ratings and voltages as indicated on the drawings. Mini–power centers shall be manufactured by Eaton.

Units shall be designed, manufactured and tested in accordance with all the latest applicable ANSI, NEMA, IEEE, CSA and UL standards, and shall be UL listed and CSA certified and bear the UL and CSA labels.

Units shall be designed for continuous operation at rated kVA, 24 hours a day, 365 days a year, with normal life expectancy as defined in ANSI C57.96.

Each mini–power center shall include a main primary breaker with an interrupting rating of 14 kA at 277/480 volts; an encapsulated dry-type transformer and a secondary panelboard with main breaker rated 10 kA interrupting rating at 120/240 volts.

1. All interconnecting wiring between the primary breaker and transformer, secondary main breaker and transformer, and distribution section shall be factory installed. Main primary, secondary and feeder breakers shall be enclosed with a padlockable hinged door.
2. The secondary distribution section shall accommodate one-inch, plug-in breakers with 10 kA interrupting capacity.
3. On the all-copper, bolt-on designs, the secondary distribution section shall accommodate bolt-on breakers with 10 kA interrupting capacity.

Insulation System

Transformers shall be insulated with a 180°C insulation system.

Required performance shall be obtained without exceeding the above indicated temperature rise in a 40°C maximum ambient, with a 30°C average over 24 hours.

All insulation materials shall be flame-retardant and shall not support combustion as defined in ASTM Standard Test Method D635.

Core and Coil Assemblies

Transformer core shall be constructed with high-grade, non-aging, silicon steel with high magnetic permeability, and low hysteresis and eddy current losses. Maximum magnetic flux densities shall be substantially below the saturation point.

The transformer core volume shall allow efficient transformer operation at 10% above the nominal tap voltage. The core laminations shall be tightly clamped and compressed. Coils shall be wound of electrical-grade aluminum (copper) with continuous wound construction. BIL (basic impulse level) for all 600-volt class windings shall be 10 kV.

The core and coil assembly shall be completely encapsulated in a proportioned mixture of resin or expoxy and aggregate to provide a moisture-proof, shock-resistant seal. The core and coil encapsulation system shall minimize the sound level.

Enclosures

The enclosure shall be made of heavy-gauge steel and shall be finished using a continuous process of degreasing, cleaning, and phosphatizing, followed by electrostatic deposition of a thermosetting polymer polyester powder coating and subsequent baking. The coating color shall be ANSI 61 and shall be UL recognized for outdoor use. Mini–power centers shall be equipped with a wiring compartment suitable for conduit entry and large enough to allow convenient wiring. The maximum temperature on top of the enclosure shall not exceed 90°C. The core of the transformer shall be grounded to the enclosure. The enclosure shall be totally enclosed, non-ventilated, NEMA 3R, with lifting eyes.

Tests

The following tests shall be performed as standard on all transformers:

1. Ratio tests at the rated voltage connection and at all tap connections.
2. Polarity and phase relation tests on the rated voltage connection.
3. Applied potential tests.
4. Induced potential test.
5. No-load and excitation current at rated voltage on the rated voltage connection.

Sound Levels

Transformer average sound levels shall not exceed the following ANSI/NEMA levels for self-cooled ratings measured in accordance with NEMA ST-20.

Average Sound Levels ①

kVA	NEMA Average Sound Level in dB
0–9	45
10–30	50

Note

① Currently being reviewed and revised by NEMA.

Typical Specification—NEMA TP-1-2002 Compliant Energy-Efficient Transformers

General

Furnish and install, three-phase energy-efficient dry-type transformers that comply with NEMA Standard TP-1-2002 and U.S. DOE 10 CFR Parts 430 and 431. Transformers shall be of the two-winding type, self-cooled, with ratings (kVA) as indicated on the drawings. Transformer's losses shall conform to NEMA TP-1 requirements. Transformers shall be manufactured by Eaton.

Transformers shall be designed, manufactured and tested in accordance with all the latest applicable ANSI, NEMA and IEEE Standards, and shall be listed by Underwriters Laboratories and bear the UL label.

Transformers shall be designed for continuous operation at rated kVA, for 24 hours a day, 365 days a year, with normal life expectancy as defined in ANSI C57.96.

Insulation System and Temperature Rise

Transformers shall be insulated with a 220°C insulation system. Transformers shall be 150°C rise and shall be capable of carrying a 15% continuous overload without exceeding a 150°C rise. Required performance shall be obtained without exceeding the above rise in a 40°C maximum, 30°C average ambient temperature.

All insulation materials shall be flame-retardant and shall not support combustion as defined in ASTM Standard Test Method D635.

Core and Coil Assemblies

Transformer core shall be constructed with high-grade, non-aging, silicon steel with high magnetic permeability, and low hysteresis and eddy current losses. Maximum magnetic flux densities shall be substantially below the saturation point.

The transformer core volume shall allow efficient transformer operation at 10% above the nominal tap voltage. The core laminations shall be tightly clamped and compressed. Coils shall be wound of electrical grade [aluminum] [copper] and continuous wound construction. BIL (basic impulse level) for all 600-volt class windings shall be 10 kV.

The core and coil assembly shall be installed on vibration-absorbing pads.

Enclosures

The enclosure shall be made of heavy gauge steel and shall be finished utilizing a continuous process of degreasing, cleaning and phosphatizing, followed by electrostatic deposition of a thermosetting polyester powder coating and subsequent baking. The coating color shall be ANSI 61 and shall be UL recognized for outdoor use.

The enclosure construction shall be ventilated, NEMA 2, drip-proof, with lifting provisions. All ventilation openings shall be protected against falling dirt. **To ensure proper ventilation, locate the unit at least 6 inches (152.4 mm) from the adjacent wall or structure.**

All transformers shall be equipped with a wiring compartment suitable for conduit entry and large enough to allow convenient wiring. The maximum temperature on top of the enclosure shall not exceed 90°C.

Tests

The following tests shall be performed as standard on all transformers:

1. Ratio tests at the rated voltage connection and at all tap connections.
2. Polarity and phase relation tests on the rated voltage connection.
3. Applied potential tests.
4. Induced potential test.
5. No-load and excitation current at rated voltage on the rated voltage connection.

Efficiency

Transformers shall be energy-efficient with minimum efficiencies as set forth per NEMA TP-1-2002 and U.S. DOE 10 CFR Parts 430 and 431 when operated at 35% of full load capacity.

NEMA TP-1-2002 Efficiency Levels

Tables of Energy Efficiency
NEMA Class 1 Efficiency Levels
Dry-Type Distribution Transformers—Low Voltage (600 V and below)

Single-Phase		Three-Phase	
kVA	Efficiency	kVA	Efficiency
15	97.7	15	97.0
25	98.0	30	97.5
37.5	98.2	45	97.7
50	98.3	75	98.0
75	98.5	112.5	98.2
100	98.6	150	98.3
167	98.7	225	98.5
250	98.8	300	98.6
333	98.9	500	98.7
—	—	750	98.8
—	—	1000	98.9

Sound Levels

Transformer average sound levels shall not exceed the following ANSI and NEMA levels for self-cooled ratings.

Average Sound Levels

NEMA ST-20 Average Sound Level, dB

Equivalent Winding kVA Range	Self-Cooled Ventilated (up to 1.2 kV) K-Factor 1, 4, 9	K-Factor 13, 20	Encapsulated (up to 1.2 kV)
3.00 and below	40	40	45
3.01 to 9.00	40	40	45
9.01 to 15.00	45	45	50
15.01 to 30.00	45	45	50
30.01 to 50.00	45	48	50
50.01 to 75.00	50	53	55
75.01 to 112.50	50	53	55
112.51 to 150.00	50	53	55
150.01 to 225.00	55	58	57
225.01 to 300.00	55	58	57
300.01 to 500.00	60	63	59
500.01 to 700.00	62	65	61
700.01 to 1000.00	64	67	63
Greater than 1000	Consult factory	Consult factory	Consult factory

Glossary of Transformer Terms

Air cooled: A transformer that is cooled by the natural circulation of air around, or through, the core and coils.

Ambient noise level: The existing or inherent sound level of the area surrounding the transformer, prior to energizing the transformer. Measured in decibels.

Ambient temperature: The temperature of the air surrounding the transformer into which the heat of the transformer is dissipated.

Ampacity: The current-carrying capacity of an electrical conductor under stated thermal conditions. Expressed in amperes.

Ampere: The practical unit of electric current.

Attenuation: A decrease in signal power or voltage. Unit of measure is dB.

Autotransformer: A transformer in which part of the winding is common to both the primary and the secondary circuits.

Banked: Two or more single-phase transformers wired together to supply a three-phase load. Three single-phase transformers can be "banked" together to support a three-phase load. For example, three 10 kVA single-phase transformers "banked" together will have a 30 kVA three-phase capacity.

BIL: Basic impulse level. The ability of a transformer's insulation system to withstand high voltage surges. All Eaton 600V-class transformers have a 10 kV BIL rating.

BTU: British thermal unit. In North America, the term "BTU" is used to describe the heat value (energy content) of fuels, and also to describe the power of heating and cooling systems, such as furnaces, stoves, barbecue grills and air conditioners. When used as a unit of power, BTU "per hour" (BTU/h) is understood, though this is often abbreviated to just "BTU."

Buck-boost: The name of a standard, single-phase, two-winding transformer application with the low voltage secondary windings connected as an autotransformer for boosting (increasing) or bucking (decreasing) voltages in small amounts. Applications can either be single-phase or three-phase.

CE: Mark to indicate third-party approved or self-certification to specific requirements of the European community.

Celsius (centigrade): Metric temperature measure.

°F = (1.8 x °C) + 32

°C = (°F-32) / 1.8

Center tap: A tap at the mid-point of a winding. The center tap on three-phase delta-delta transformers is called a lighting tap. It provides 5% of the transformer's kVA for single-phase loads.

Certified tests: Actual values taken during production tests and certified as applying to a given unit shipped on a specific order. Certified tests are serial number–specific.

Common mode: Electrical noise or voltage fluctuation that occurs between all of the line leads and the common ground, or between ground and line or neutral.

Compensated transformer: A transformer with a turns ratio that provides a higher than nameplate output (secondary) voltage at no load, and nameplate output (secondary) voltage at rated load. It is common for small transformers (2 kVA and less) to be compensated.

Conductor losses: Losses (expressed in watts) in a transformer that are incidental to carrying a load: coil resistance, stray loss due to stray fluxes in the windings, core clamps, and the like, as well as circulating currents (if any) in parallel windings. Also called load losses.

Continuous rating: The load that a transformer can handle indefinitely without exceeding its specified temperature rise.

Core losses: Losses (expressed in watts) caused by magnetization of the core and its resistance to magnetic flux. Also called no-load losses or excitation losses. Core losses are always present when the transformer is energized.

CSA: Canadian Standards Association. The Canadian equivalent of Underwriters Laboratories (UL).

CSL3: Candidate Standard Level 3 (CSL3) design criteria developed by the U.S. Department of Energy. This term is used when considering the maximum, practical efficiency of a transformer.

cUL: Mark to indicate UL Certification to specific CSA Standards.

Decibel (dB): Unit of measure used to express the magnitude of a change in signal or sound level.

Delta connection: A standard three-phase connection with the ends of each phase winding connected in series to form a closed loop with each phase 120 degrees from the other. Sometimes referred to as three-wire.

Dielectric tests: Tests that consist of the application of a voltage higher than the rated voltage for a specified time for the purpose of determining the adequacy against breakdowns of insulating materials and spacings under normal conditions.

Dry-type transformer: A transformer in which the core and coils are in a gaseous or dry compound insulating medium. A transformer that is cooled by a medium other than a liquid, normally by the circulation of air.

E3: Eaton's version of a CSL3 transformer.

Eddy currents: The currents that are induced in the body of a conducting mass by the time variation of magnetic flux or varying magnetic field.

Efficiency: The ratio of the power output from a transformer to the total power input. Typically expressed as a %.

Electrostatic shield: Copper or other conducting sheet placed between primary and secondary windings, and grounded to reduce electrical interference and to provide additional protection from line-to-line or line-to-ground noise. Commonly referred to as "Faraday shield."

Encapsulated transformer: A transformer with its coils either dipped or cast in an epoxy resin or other encapsulating substance.

Enclosure: A surrounding case or housing used to protect the contained equipment against external conditions and prevent personnel from accidentally contacting live parts.

Environmentally preferable product: A product that has a lesser or reduced negative effect on human health and the environment when compared to competing products that serve the same purpose. This comparison may consider raw materials acquisition, production, manufacturing, packaging, distribution, reuse, operation, maintenance and disposal of the product. This term includes recyclable products, recycled products and reusable products.

EPACT: The Energy Policy Act of 1992 (EPAct) is an important piece of legislation for efficiency because it established minimum efficiency levels for dry-type distribution transformers manufactured or imported after December 2006. EPAct, which was based on NEMA standards, defined a number of terms, including what constitutes an energy-efficient transformer. The DOE issued a rule that defines these transformers and how manufacturers must comply. DOE EPAct rule (PDF): Energy Efficiency Program for Certain Commercial and Industrial Equipment: Test Procedures, Labeling, and the Certification Requirements for Electric Motors. Final Rule. 10-CFR Part 431.

Excitation current: No load current. The current that flows in any winding used to excite the transformer when all other windings are open-circuited. It is usually expressed in percent of the rated current of a winding in which it is measured. Also called magnetizing current.

FCAN: "Full Capacity Above Nominal" taps. Designates the transformer will deliver its rated kVA when connected to a voltage source which is higher than the rated primary voltage.

FCBN: "Full Capacity Below Nominal" taps. Designates the transformer will deliver its rated kVA when connected to a voltage source which is lower than the rated primary voltage.

Frequency: On AC circuits, designates the number of times that polarity alternates from positive to negative and back again per second, such as 60 cycles per second. Typically measured in Hertz (Hz).

Ground: Connecting one side of a circuit to the earth through low resistance or low impedance paths to help prevent transmitting electrical shock to personnel.

Harmonic: A sinusoidal waveform with a frequency that is an integral multiple of the fundamental frequency (60 Hz).

60 H_3 fundamental
120 H_3 2nd harmonic
180 H_3 3rd harmonic
240 H_3 4th harmonic

Harmonic distortion: Nonlinear distortion of a system characterized by the appearance of harmonic (non-sinusoidal) currents in the output, when the input is sinusoidal.

Harmonic distortion, total (THD): The square root of the sum of the squares of all harmonic currents present in a load, excluding the fundamental 60 Hz current. Usually expressed as a percent of the fundamental.

High voltage windings: In a two-winding transformer, the winding intended to have the greater voltage. Usually marked with "H" designations.

HMT: Harmonic Mitigating Transformer (HMT) is better able to handle the harmonic currents present in today's electrical power system. thereby increasing system capacity, reducing distortion throughout a facility, help to minimize downtime and "mysterious" maintenance on equipment, and return the longevity of equipment life through reduced operational energy losses, thereby running cooler.

Hp: Horsepower. The energy required to raise 33,000 pounds a distance of one foot in one minute. 1 hp is equal to 746 watts, or 0.746 kW.

Hi pot: A standard test on dry-type transformers consisting of extra-high potentials (voltages) connected to the windings. Used to check the integrity of insulation materials and clearances.

Hottest-spot temperature: The highest temperature inside the transformer winding. Is greater than the measured average temperature of the coil conductors, when using the resistance change method.

Hysteresis: The tendency of a magnetic substance to persist in any state of magnetization.

Impedance: The retarding forces of current in an AC circuit; the current-limiting characteristics of a transformer. Symbol = Z

Inductance: In electrical circuits, the opposition to a change in the flow of electrical current. Symbol = L

Inducted potential test: A standard dielectric test of transformer insulation. Verifies the integrity of insulating materials and electrical clearances.

Inrush current: The initial high peak of current that occurs in the first few cycles of energization, which can be 30 to 40 times the rated current.

Insulating transformer: Another term for an isolating transformer.

Insulation: Material with a high electrical resistance.

Insulation materials: Those materials used to insulate the transformer's electrical windings from each other and ground.

Integral TVSS or SPD: Major Standard Change for Surge Protective Devices (formerly known as Transient Voltage Surge Suppressors). The primary safety standard for transient voltage surge suppressors (TVSS) has undergone major revisions in the past three years with mandatory compliance by manufacturers required by September 29, 2009. Even the name of the standard has changed from UL Standard for Safety for Transient Voltage Surge Suppressors, UL 1449 to UL Standard for Safety for Surge Protective Devices, UL 1449. This means that TVSS listed to the UL 1449 2nd Edition standard will no longer be able to be manufactured after September 29, 2009. All Surge Protective Devices must be designed, tested, manufactured and listed to the UL 1449 3rd Edition standard after this date.

Isolating transformer: A transformer where the input (primary) windings are not connected to the output (secondary) windings (i.e., electrically isolated).

K-factor: A common industry term for the amount of harmonics produced by a given load. The larger the K-factor, the more harmonics that are present. Also used to define a transformer's ability to withstand the additional heating generated by harmonic currents.

kVA: Kilovolt-ampere. Designates the output that a transformer can deliver for a specified time at a rated secondary voltage and rated frequency without exceeding the specified temperature rise. When multiplied by the power factor, will give kilowatts or kW.

1000 VA = 1 kVA

Lamination: Thin sheets of electrical steel used to construct the core of a transformer.

Limiting temperature: The maximum temperature at which a component or material may be operated continuously with no sacrifice in normal life expectancy.

Linear load: A load where the current waveform conforms to that of the applied voltage, or a load where a change in current is directly proportional to a change in applied voltage.

Live part: Any component consisting of an electrically conductive material that can be energized under conditions of normal use.

Load losses: I^2R losses in windings. Also see conductor losses.

Low voltage winding: In a two-winding transformer, the winding intended to have the lesser voltage. Usually marked with "X" designations.

Mid-tap: See center tap.

Noise level: The relative intensity of sound, measured in decibels (dB). NEMA Standard ST-20 outlines the maximum allowable noise level for dry-type transformers.

Nonlinear load: A load where the current waveform does not conform to that of the applied voltage, or where a change in current is not proportional to a change in applied voltage.

Non-ventilated transformer: A transformer where the core and coil assembly is mounted inside an enclosure with no openings for ventilation. Also referred to as totally enclosed non-ventilated (TENV).

No load losses: Losses in a transformer that is excited at rated voltage and frequency but that is not supplying a load. No load losses include core losses, dielectric losses and conductor losses in the winding due to the exciting current. Also referred to as excitation losses.

Overload capability: Short-term overload capacity is designed into transformers as required by ANSI. Continuous overload capacity is not deliberately designed into a transformer because the design objective is to be within the allowed winding temperature rise with nameplate loading.

Percent IR (% resistance): Voltage drop due to resistance at rated current in percent of rated voltage.

Percent IX (% reactance): Voltage drop due to reactance at rated current in percent of rated voltage.

Percent IZ (% impedance): Voltage drop due to impedance at rated current in percent of rated voltage.

Phase: Type of AC electrical circuit; usually single-phase two- or three-wire, or three-phase three- or four-wire.

Polarity test: A standard test on transformers to determine instantaneous direction of the voltages in the primary compared to the secondary.

Primary taps: Taps added to the primary (input) winding. See Tap.

Primary voltage: The input circuit voltage.

Power factor: The cosine of the phase angle between a voltage and a current.

Ratio test: A standard test of transformers to determine the ratio of the input (primary) voltage to the output (secondary) voltage.

Reactance: The effect of inductive and capacitive components of a circuit producing other than unity power factor.

Reactor: A single winding device with an air or iron core that produces a specific amount of inductive reactance into a circuit. Normally used to reduce of control current.

Regulation: Usually expressed as the percent change in output voltage when the load goes from full load to no load.

Scott T connection: Connection for three-phase transformers. Instead of using three sets of coils for a three-phase load, the transformer uses only two sets of coils.

Series/multiple winding: A winding consisting of two or more sections that can be connected for series operation or multiple (parallel) operation. Also called series-parallel winding.

Short circuit: A low resistance connection, usually accidental, across part of a circuit, resulting in excessive current flow.

Sound levels: All transformers make some sound mainly due to the vibration generated in its core by alternating flux. All Eaton general-purpose dry-type distribution transformers are designed with sound levels lower than NEMA ST-20 maximum levels.

Star connection: Same as a wye connection.

Step-down transformer: A transformer where the input voltage is greater than the output voltage.

Step-up transformer: A transformer where the input voltage is less than the output voltage.

T-T connection: See Scott T connection.

Tap: A connection brought out of a winding at some point between its extremities, usually to permit changing the voltage or current ratio. Taps are typically used to compensate for above or below rated input voltage, in order to provide the rated output voltage. See FCAN and FCBN.

Temperature class: The maximum temperature that the insulation system of a transformer can continuously withstand. The common insulation classes are 105, 150, 180 (also 185) and 220.

Temperature rise: The increase over ambient temperature of the windings due to energizing and loading the transformer.

Total losses: The sum of the no-load losses and load losses.

Totally enclosed non-ventilated enclosure: The core and coil assembly is installed inside an enclosure that has no ventilation to cool the transformer. The transformer relies on heat to radiate from the enclosure for cooling.

Transformer tests: Per NEMA ST-20, routine transformer production tests are performed on each transformer prior to shipment. These tests are: *Ratio tests* on the rated voltage connection; *Polarity and Phase Relation tests* on the rated connection; *No-Load and Excitation Current tests* at rated voltage on the rated voltage connection and *Applied Potential and Induced Potential tests*. Special tests include sound level testing.

Transverse mode: Electrical noise or voltage disturbance that occurs between phase and neutral, or from spurious signals across metallic hot line and the neutral conductor.

Turns ratio: The ratio of the number of turns in the high voltage winding to that in the low voltage winding.

Typical test data: Tests that were performed on similar units that were previously manufactured and tested.

UL (Underwriters Laboratories): An independent safety testing organization.

Universal taps: A combination of six primary voltage taps consisting of 2 at +2-1/2% FCAN and 4 at -2-1/2% FCBN.

Watt: A unit of electrical power when the current in a circuit is one ampere and the voltage is one volt.

Wye connection: A standard three-wire transformer connection with similar ends of single-phase coils connected together. The common point forms the electrical neutral point and may be grounded. Also referred to as three-phase four-wire. To obtain the line-to-neutral voltage, divide the line voltage by $\sqrt{3}(1.732)$.

Frequently Asked Questions About Transformers

Can 60 Hz transformers be used at other frequencies?

Transformers rated for 60 Hz can be applied to circuits with a higher frequency, as long as the nameplate voltages are not exceeded. The higher the frequency that you apply to a 60 Hz transformer, the less voltage regulation you will have. 60 Hz transformers may be used at lower frequencies but only at reduced voltages corresponding to the reduction in frequency. For example, a 480 to 120 volt 60 Hz transformer can carry rated kVA at 50 Hz but ONLY when applied as a 400 to 100 volt transformer (50/60 x 480 = 400).

Can single-phase transformers be used on a three-phase source?

Yes. Any single-phase transformer can be used on a three-phase source by connecting the primary terminals of the single-phase transformer to any two wires of a three-phase system. It does not matter whether the three-phase source is three-phase three-wire or three-phase four-wire. The output of the transformer will be single-phase.

Can transformers be used to create three-phase power from a single-phase system?

No. Single-phase transformers alone cannot be used to create the phase-shifts required for a three-phase system. Phase shifting devices (reactors or capacitors) or phase converters in conjunction with transformers are required to change single-phase power to three-phase.

What considerations need to be taken into account when operating transformers at high altitudes?

At altitudes greater than 3300 feet (1000 meters), the density of the air is less than at lower elevations. This reduces the ability of the air surrounding a transformer to cool it, so the temperature rise of the transformer is increased. Therefore, when a transformer is being installed at altitudes greater than 3300 feet above sea level, it is necessary to derate the usable capacity of the transformer. The table below lists the derating factors. As an example, a 75 kVA 480V–208Y/120V transformer installed at 10,000 feet needs to be derated by 4%. Instead of 208A output, the usable current is only 199A.

Altitude		
Feet	**Meters**	**Current Rating Factor**
3300	1000	1.00
4000	1200	0.995
5000	1500	0.99
6000	1800	0.985
7000	2100	0.98
8000	2400	0.97
9000	2700	0.965
10,000	3000	0.96
12,000	3600	0.95
14,000	4200	0.935
15,000	4500	0.93

What considerations need to be taken into account when operating transformers where the ambient temperature is high?

Eaton's dry-type transformers are designed in accordance with ANSI standards to operate in areas where the average maximum ambient temperature is 40°C. For operation in ambient temperatures above 40°C, there are two options:

1. Order a custom designed transformer made for the specific application.
2. Derate the nameplate kVA of a standard transformer by 8% for each 10°C of ambient above 40°C.

What is the normal life expectancy of a transformer?

When a transformer is operated under ANSI/IEEE basic loading conditions ANSI C57.96), its normal life expectancy is 20 years. The ANSI/IEEE basic loading conditions are:

A. The transformer is continuously loaded at rated kVA and rated voltages.

B. The average temperature of the ambient air during any 24-hour period is equal to 30°C and at no time exceeds 40°C.

C. The altitude where the transformer is installed does not exceed 3300 feet (1000 meters).

What are insulation classes?

Insulation classes were originally used to distinguish insulating materials operating at different temperatures. In the past, letters were used for the different designations. Recently, insulation system temperatures (°C) have replaced the letters' designations.

Insulation Classes

Previous Designation	Insulation System Rating (°C)
Class A	105
Class B	150
Class F	180
Class H	220
Class R	220

How do you know if the enclosure temperature is too hot?

UL and CSA standards strictly regulate the highest temperature that an enclosure can reach. For ventilated transformers, the temperature of the enclosure should not increase by more than 50°C in a 40°C ambient at full rated current. For encapsulated transformers, the temperature of the enclosure should not increase by more than 65°C in a 25°C ambient at full rated current. This means that it is permissible for the temperature of the enclosure to reach 90°C (194°F). Although this temperature is very warm to the touch, it is within the allowed standards. A thermometer should be used to measure enclosure temperatures, not your hand.

Can transformers be reverse-connected (reverse-fed)?

Yes, with limitations. Eaton single-phase transformers rated 3 kVA and larger can be reverse-connected without any loss of kVA capacity or any adverse effects. Transformers rated 2 kVA and below, because there is a turns ratio compensation on the low voltage winding that adjusts voltage between no load and full load conditions, should not be reverse-fed.

Three-phase transformers with either delta-delta or delta-wye configurations can also be reverse-connected for step-up operation. When reverse-feeding a delta-wye connected transformer, there are two important considerations to take into account: (1) The neutral is not connected, only the three-phase wires of the wye system are connected, and (2) the ground strap between X0 and the enclosure must be removed. Due to high inrush currents that may be created in these applications, it is recommended that you do not reverse-feed transformers rated more than 75 kVA. The preferred solution is to purchase an Eaton step-up transformer designed specifically for your application.

Can transformers be connected in parallel?

Yes, with certain restrictions. For single-phase transformers being connected in parallel, the voltages and impedances of the transformers must be equal (impedances must be within 7.5% of each other). For three-phase transformers, the same restrictions apply as for single-phase transformers, plus the phase shift of the transformers must be the same. For example, a delta-wye–connected transformer (30° phase shift) must be connected in parallel with another delta-wye–connected transformer, not a delta-delta connected–transformer (0° phase shift).

Why is the impedance of a transformer important?

The impedance of a transformer is important because it is used to determine the interrupting rating and trip rating of the circuit protection devices on the load or line side of the transformer. To calculate the maximum short circuit current on the load side of a transformer, use the following formula:

$$\text{Maximum Short Circuit Load Current (Amps)} = \frac{\text{Full Load Current (Amps)}}{\text{Transformer Impedance}}$$

Full load current for single-phase circuits is:

$$\frac{\text{Nameplate Volt-Amps}}{\text{Load (output) Voltage}}$$

and for three-phase circuits, the full load current is:

$$\frac{\text{Nameplate Volts-Amps}}{\text{Load (output) Volts} \times \sqrt{3}}$$

Example: For a standard three-phase, 75 kVA transformer, rated 480 volt delta primary and 208Y/120 volt secondary (catalog number V48M28T75J) and impedance equal to 5.1%, the full load current is:

$$\frac{75{,}000\ \text{VA}}{208\text{V} \times 1.732} = 208.2\text{A}$$

The maximum short circuit load current is:

$$\frac{208.2\text{A}}{0.051} = 4{,}082.4\text{A}$$

The circuit breaker or fuse on the secondary side of this transformer would have to have a minimum interrupting capacity of 4083 amperes at 208 volts. NEMA ST-20 (1992).

A similar transformer with lower impedance would require a primary circuit breaker or fuse with a higher interrupting capacity.

What clearances are required around transformers when they are installed?

All dry-type transformers depend upon the circulation of air for cooling; therefore, it is important that the flow of air around a transformer not be impeded. UL 1561 requires that there be no less than 6 inches (152.4 mm) clearance between any side transformer with ventilation openings and any wall or obstruction.

In compliance with NEC 450.9, Eaton's ventilated transformers have a note on their nameplates requiring a minimum of 6 inches (152.4 mm) clearance from the ventilation openings and walls or other obstructions. This clearance only addresses the ventilation needs of the transformer. There may be additional local codes and standards that affect installation clearances.

Transformers should not be mounted in such a manner that one unit will contribute to the additional heating of another unit, beyond allowable temperature limits, for example, where two units are mounted on a wall one above the other.

Dimensions

Approximate Dimensions in Inches (mm)

Enclosure Dimensional Drawings—Ventilated Transformers

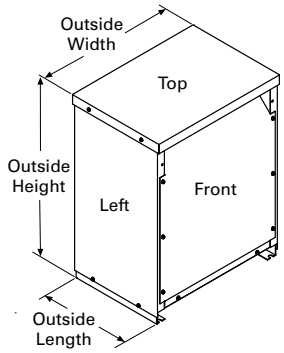

Drawing 1

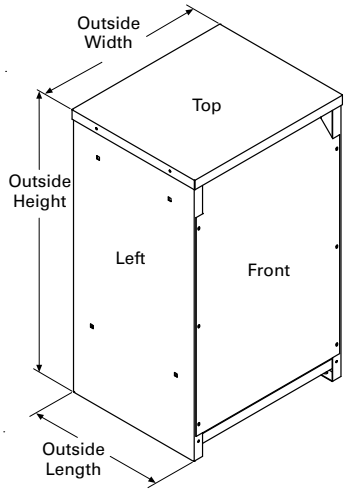

Drawing 2

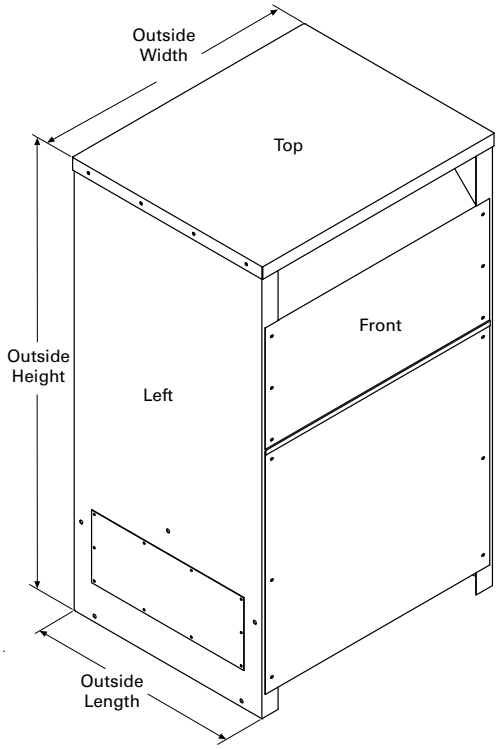

Drawing 3

Frame	Drawing Number	Dimensions Height	Width	Length
FR816	1	31.30 (795.0)	22.89 (581.4)	18.39 (467.2)
FR818	1	37.59 (954.8)	22.89 (581.4)	20.36 (517.1)
FR819	2	42.03 (1067.6)	24.22 (615.2)	23.84 (605.5)
FR820	2	42.03 (1067.6)	24.22 (615.2)	23.84 (605.5)
FR814	2	62.91 (1597.9)	29.97 (761.2)	33.97 (862.8)
FR842	1	33.75 (857.3)	22.45 (570.2)	17.40 (442.0)
FR843	1	38.70 (983.0)	23.51 (597.2)	24.38 (619.3)
FR844	2	44.92 (1141.0)	26.27 (667.3)	27.12 (688.8)
FR821	2	62.91 (1597.9)	29.97 (761.2)	33.97 (862.8)
FR912D, FR912D	1	30.00 (762.0)	23.00 (584.2)	16.50 (419.1)
FR914D/FR914F	1	39.00 (990.6)	29.00 (736.6)	22.00 (558.8)
FR915D/FR915F	1	39.00 (990.6)	29.00 (736.6)	22.00 (558.8)
FR916A	2	48.56 (1233.4)	28.22 (716.8)	23.42 (594.9)
FR917	2	56.17 (1426.7)	31.44 (798.6)	24.67 (626.6)
FR918A	2	62.18 (1579.4)	31.44 (798.6)	30.68 (779.3)
FR923	2	57.54 (1461.5)	36.69 (931.9)	32.65 (829.3)
FR924	2	68.37 (1736.6)	44.46 (1129.3)	36.44 (925.6)
FR928	2	56.16 (1426.5)	32.93 (836.4)	27.97 (710.4)
FR929	2	59.56 (1512.8)	36.72 (932.7)	32.50 (825.5)
FR919	3	75.00 (1905.0)	44.20 (1122.7)	36.23 (920.2)
FR920	3	75.00 (1905.0)	44.20 (1122.7)	36.23 (920.2)
FR922	3	90.00 (2286.0)	69.26 (1759.2)	42.65 (1083.3)

Approximate Dimensions in Inches (mm)

Enclosure Dimensional Drawings—Encapsulated Transformers (Type EP)

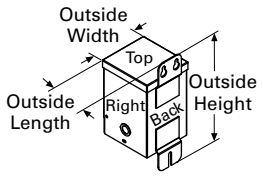

Drawing 6

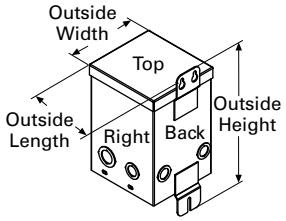

Drawing 7

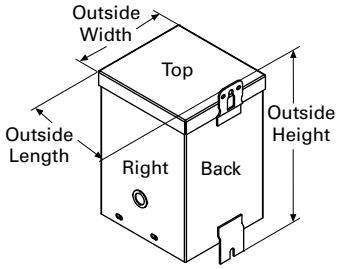

Drawing 8

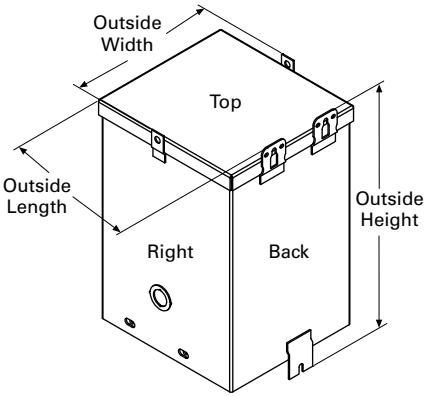

Drawing 9

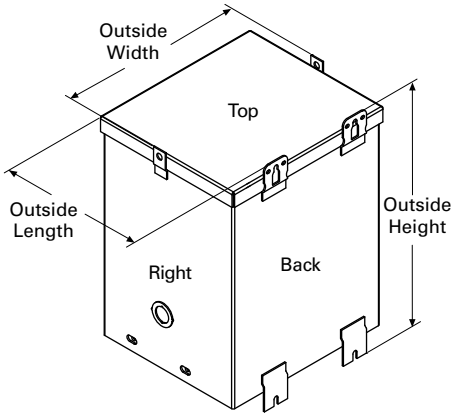

Drawing 10

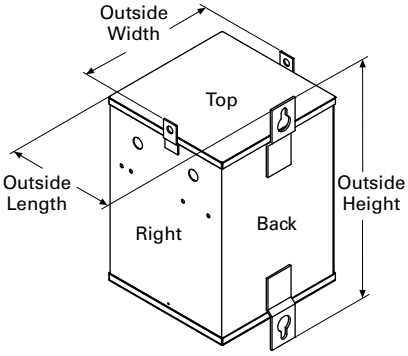

Drawing 11

Frame	Drawing Number	Dimensions Height	Width	Length
FR52	6	8.91 (226.3)	4.11 (104.4)	4.00 (101.6)
FR54	6	8.91 (226.3)	4.11 (104.4)	4.00 (101.6)
FR55	6	8.91 (226.3)	4.11 (104.4)	4.00 (101.6)
FR56	7	8.97 (227.8)	4.87 (123.7)	4.06 (103.1)
FR57	7	8.97 (227.8)	4.87 (123.7)	4.91 (124.7)
FR58A	7	11.28 (286.5)	5.99 (152.1)	5.75 (146.1)
FR59A	7	11.28 (286.5)	5.99 (152.1)	5.75 (146.1)
FR67	7	13.41 (340.6)	6.37 (161.8)	6.52 (165.6)
FR68	7	13.41 (340.6)	6.37 (161.8)	6.52 (165.6)
FR176	8	14.25 (361.9)	7.69 (195.3)	8.00 (203.2)
FR177	9	16.00 (406.4)	10.38 (263.7)	9.89 (251.2)
FR301	11	22.26 (565.4)	12.71 (322.8)	12.79 (324.9)
FR178	9	16.00 (406.4)	10.38 (263.7)	9.89 (251.2)
FR302	11	25.26 (641.6)	12.71 (322.8)	12.79 (324.9)
FR304	11	25.26 (641.6)	14.72 (373.9)	14.82 (376.4)
FR179	9	19.00 (482.6)	13.38 (339.9)	10.52 (267.2)
FR180	9	19.00 (482.6)	13.38 (339.9)	10.52 (267.2)
FR182	10	23.31 (592.1)	16.35 (415.3)	14.12 (358.6)
FR190	10	26.31 (668.3)	16.35 (415.3)	14.12 (358.6)

Approximate Dimensions in Inches (mm)

2

Enclosure Dimensional Drawings—Encapsulated Transformers Type EP (Single-Phase), continued

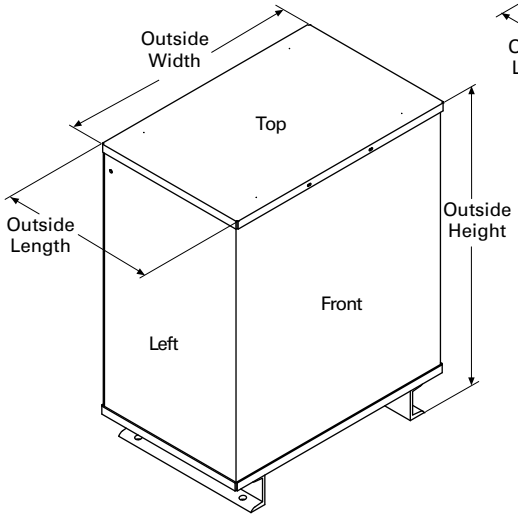

Drawing 12

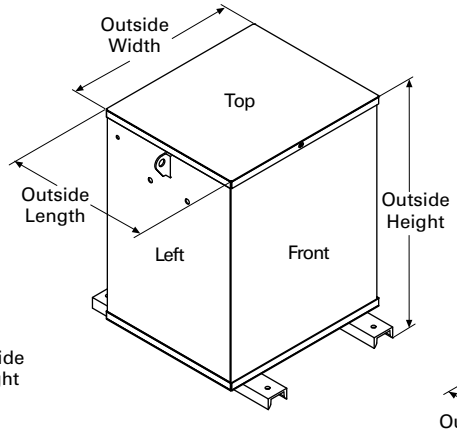

Drawing 13

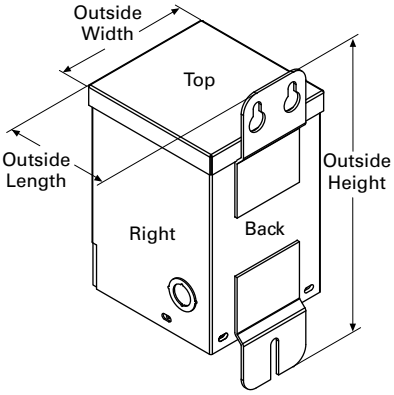

Drawing 14

Frame	Drawing Number	Dimensions Height	Width	Length
FR132	13	20.67 (525.0)	19.02 (483.1)	13.59 (345.2)
FR300A	12	28.24 (717.3)	22.42 (569.5)	14.06 (357.1)
FR57P	14	9.34 (237.2)	4.45 (113.0)	5.18 (131.6)
FR58AP	14	11.68 (296.7)	4.99 (126.7)	5.99 (152.1)
FR567P	14	13.03 (330.9)	5.74 (145.8)	6.56 (166.6)
FR568P	14	13.78 (350.0)	6.22 (158.0)	6.32 (160.5)

Approximate Dimensions in Inches (mm)

Enclosure Dimensional Drawings—Encapsulated Transformers (Type EPT)

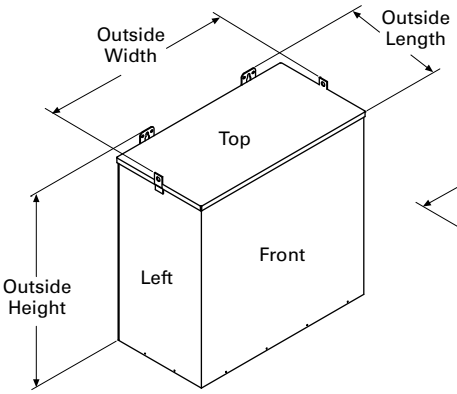

Drawing 15

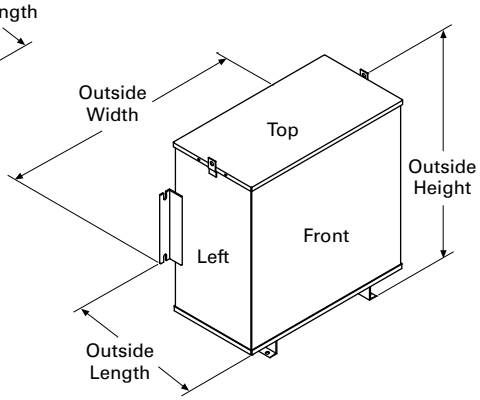

Drawing 16

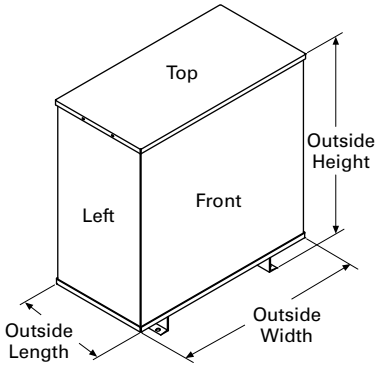

Drawing 17

Frame	Drawing Number	Dimensions Height	Width	Length
FR201	15	13.40 (340.4)	15.93 (404.6	8.26 (209.8)
FR102	15	13.12 (333.2)	19.59 (497.6)	7.09 (180.1)
FR103	15	15.90 (403.9)	16.93 (430.0)	10.01 (254.3)
FR200	15	15.90 (403.9)	16.93 (430.0)	10.01 (254.3)
FR97	15	15.19 (385.8)	25.68 (652.3)	8.38 (212.9)
FR95	15	17.38 (441.5)	20.00 (508.0)	10.52 (267.2)
FR243	16	17.38 (441.5)	20.00 (508.0)	10.52 (267.2)
FR96	15	16.19 (411.2)	29.68 (753.9)	9.42 (239.3)
FR244	16	28.15 (715.0)	26.58 (675.1)	14.66 (372.4)
FR245	17	32.06 (814.3)	30.29 (769.4)	15.68 (398.3)

Approximate Dimensions in Inches (mm)

Enclosure Dimensional Drawings—Core-Coil Transformers

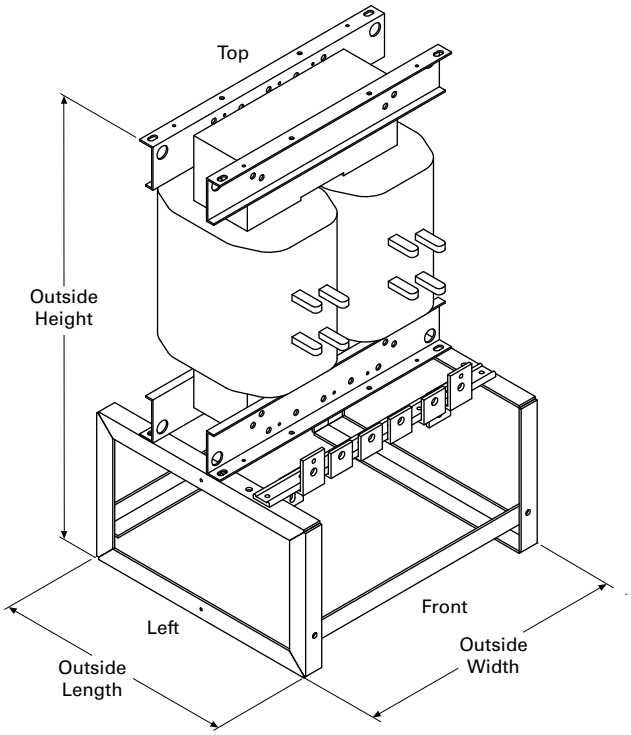

Drawing 4

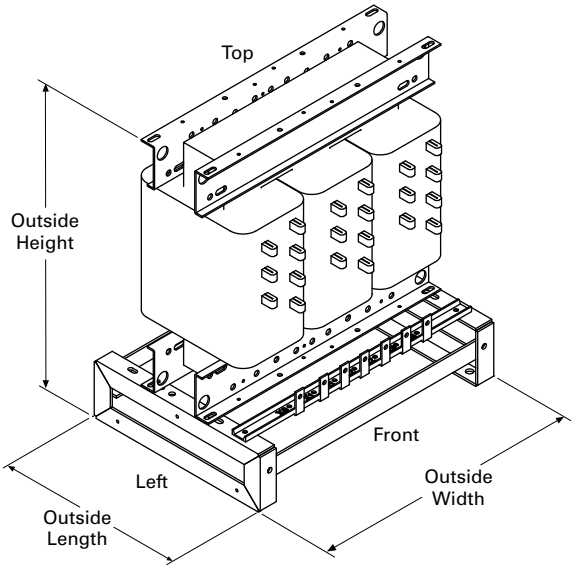

Drawing 5

Frame	Drawing Number	Dimensions Height	Width	Length
FR817C	4	39.28 (997.7)	21.62 (549.1)	19.51 (495.6)
FR818C	4	39.28 (997.7)	21.62 (549.1)	19.51 (495.6)
FR912C	5	24.75 (628.7)	19.50 (495.3)	14.00 (355.6)
FR914C	5	29.37 (746.0)	25.12 (638.0)	19.00 (482.6)
FR915C	5	31.38 (1067.6)	25.12 (638.0)	19.00 (482.6)
FR9516C	5	41.43 (1052.3)	25.12 (638.0)	20.00 (508.0)
FR916AC	5	43.40 (1102.4)	27.22 (691.4)	22.82 (579.6)

Approximate Dimensions in Inches (mm)

Enclosure Dimensional Drawings—Totally Enclosed Nonventilated Transformers

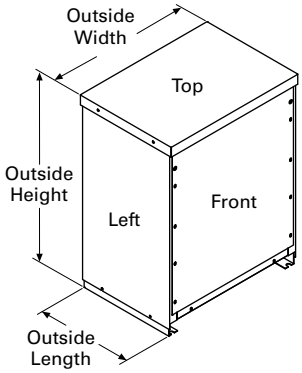

Drawing 26

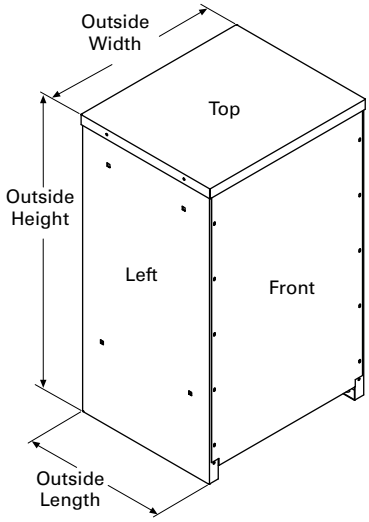

Drawing 27

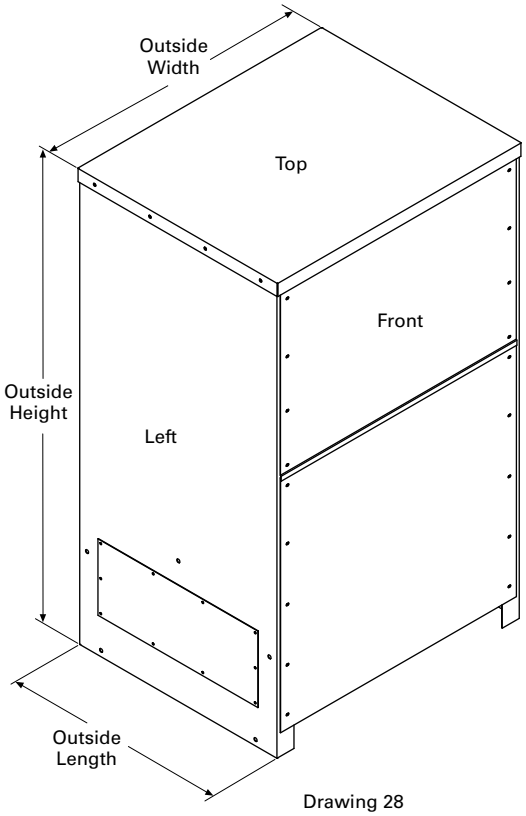

Drawing 28

Frame	Drawing Number	Dimensions Height	Width	Length
FR818N	26	37.59 (954.8)	22.89 (581.4)	20.36 (517.1)
FR819N	27	42.03 (1067.6)	24.22 (615.2)	23.84 (605.5)
FR820N	27	42.03 (1067.6)	24.22 (615.2)	23.84 (605.5)
FR814N	27	62.91 (1597.9)	29.97 (761.2)	33.97 (862.8)
FR912DN	26	30.00 (762.0)	23.00 (584.2)	16.50 (419.1)
FR914DN/FR914FN	26	39.18 (995.2)	29.00 (736.6)	22.00 (558.8)
FR915DN/FR915FN	26	39.18 (995.2)	29.00 (736.6)	22.00 (558.8)
FR916AN	27	46.58 (1183.1)	28.22 (716.8)	23.42 (594.9)
FR917N	27	56.18 (1427.0)	31.44 (798.6)	24.67 (626.8)
FR918AN	27	62.18 (1579.4)	31.44 (798.6)	30.68 (779.3)
FR923N	27	57.50 (1460.5)	36.69 (931.9)	32.65 (829.3)
FR919N	28	75.00 (1905.0)	44.21 (1122.9)	36.23 (920.2)
FR920N	28	75.00 (1905.0)	44.21 (1122.9)	36.23 (920.2)

Approximate Dimensions in Inches (mm)

2

Enclosure Dimensional Drawings—Hazardous Location Transformers (Type EPZ)

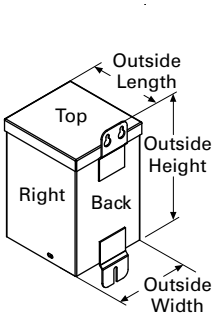

Drawing 21

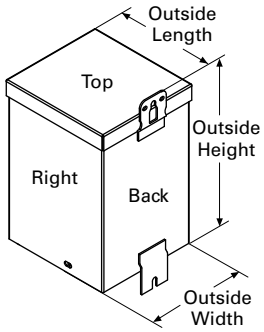

Drawing 22

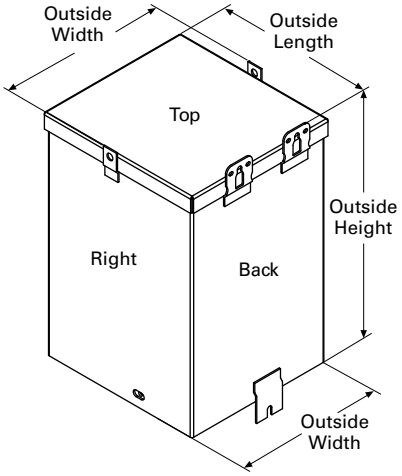

Drawing 23

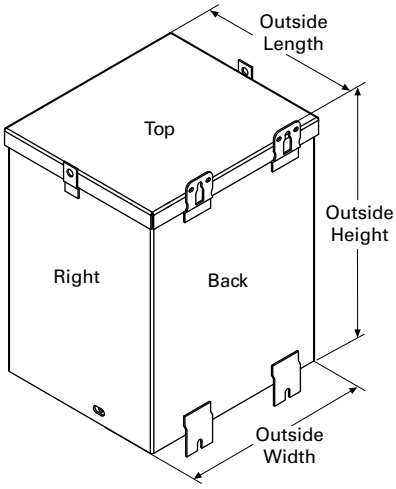

Drawing 24

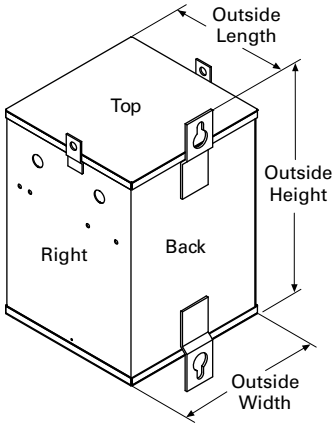

Drawing 25

Frame	Drawing Number	Dimensions Height	Width	Length
FR57H	21	8.97 (227.8)	4.87 (123.7)	4.91 (124.7)
FR58H	22	11.28 (286.5)	5.99 (152.1)	5.75 (146.1)
FR59H	22	11.28 (286.5)	5.99 (152.1)	5.75 (146.1)
FR67H	22	13.41 (340.6)	6.37 (161.8)	6.52 (165.6)
FR68H	22	13.41 (340.6)	6.37 (161.8)	6.52 (165.6)
FR176H	23	14.25 (361.9)	7.69 (195.3)	8.00 (203.2)
FR177H	24	16.00 (406.4)	10.38 (263.7)	9.89 (251.2)
FR178H	24	16.00 (406.4)	10.38 (263.7)	9.89 (251.2)
FR179H	24	19.00 (482.6)	13.38 (339.9)	10.52 (267.2)
FR180H	24	19.00 (482.6)	13.38 (339.9)	10.52 (267.2)
FR182H	25	23.31 (592.1)	16.35 (415.3)	14.12 (358.6)

Approximate Dimensions in Inches (mm)

Enclosure Dimensional Drawings—Hazardous Location Transformers (Type EPTZ)

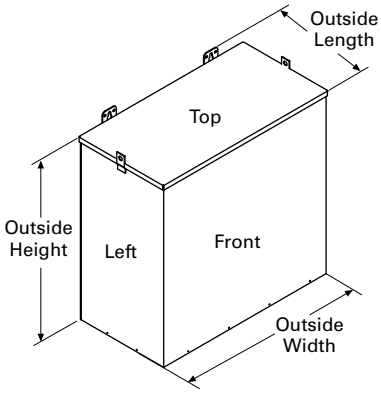

Drawing 18

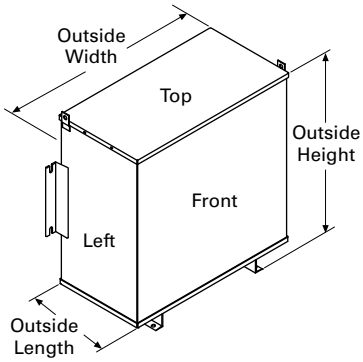

Drawing 19

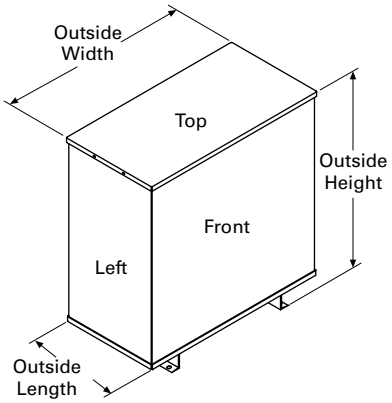

Drawing 20

Frame	Drawing Number	Dimensions Height	Width	Length
FR201H	18	13.40 (340.4)	15.93 (404.6)	8.26 (209.8)
FR200H	18	15.90 (403.9)	16.93 (430.0)	10.01 (254.3)
FR103H	18	15.90 (403.9)	16.93 (430.0)	10.01 (254.3)
FR95H	18	17.38 (441.5)	20.00 (508.0)	10.52 (267.2)
FR243H	19	17.38 (441.5)	20.00 (508.0)	10.52 (267.2)
FR244H	19	28.15 (715.0)	26.58 (675.1)	14.66 (372.4)
FR245H	20	32.06 (814.3)	30.29 (769.4)	15.68 (398.3)

Panelboards

3.1 Introduction
Product Selection Guide V2-T3-2

3.2 EZ™ Box and EZ Trim
Product Description V2-T3-4
Features V2-T3-4
Standards and Certifications V2-T3-5
Product Selection V2-T3-6

3.3 Pow-R-Line C Panelboards
Product Description V2-T3-7
Application Description V2-T3-8
Standards and Certifications V2-T3-10
Technical Data and Specifications V2-T3-11
Type PRL1a V2-T3-26
Type PRL1aF V2-T3-30
Type PRL1a-LX V2-T3-34
Type PRL2a V2-T3-38
Type PRL2aF V2-T3-42
Type PRL2a-LX V2-T3-46
Retrofit Panelboard V2-T3-50
Type PRL3a V2-T3-58
Type PRL3E V2-T3-62
Type PRL4 . . . . . V2-T3-66
Type PRL4D V2-T3-76
Type PRL5P V2-T3-86

3.4 Elevator Control Panelboard
Elevator Control Panelboard V2-T3-96

3.5 Types PRL1a, 2a, 3a, 3E, 4 and Column Modifications
Types PRL1a, 2a, 3a, 3E, 4, Column V2-T3-98
Modifications Selection Guide V2-T3-98

3.6 Pow-R-Command
Product Overview V2-T3-107
Features V2-T3-108
Product Selection V2-T3-111
Accessories V2-T3-121

3.7 Metering Service Sections
Product Description V2-T3-127
Application Description V2-T3-127
Standards and Certifications V2-T3-127
Catalog Number Selection V2-T3-128
Product Selection V2-T3-128

3.8 Pow-R-Stock Plus Program
Pow-R-Stock Plus V2-T3-130

3.9 Customer Manufacturing Solution Centers
Customer Manufacturing Solution Centers V2-T3-131

Learn Online

Panelboards and Lighting Controls

Contents

Description

Product Selection Guide

Product Selection Guide

Product Types

Type PRL1a

Bolt-On or Plug-On Circuit Breakers 240 Vac Maximum

Main lugs only
600 A maximum

Main Circuit breaker
600 A maximum

Branch circuit breakers
100 A maximum,
Single-, two- and three-pole

Fusible Lighting Panelboard PRL1aF

240 and 480Y/277 Vac Maximum

Main lugs only
400 A maximum

Branch overcurrent protective devices
30 A maximum,
Single-, two and three-pole utilizing Class CC fuses

Type PRL1a-LX Column Type

Bolt-On Circuit Breakers 240 Vac Maximum

Main lugs only
225 A maximum

Main circuit breaker
225 A maximum

Branch circuit breakers
100 A maximum,
Single-, two- and three-pole

Type PRL2a

Bolt-On Circuit Breakers 240 or 480Y/277 Vac; 125/250 Vdc Maximum

Main lugs only
600 A maximum

Main circuit breaker
600 A maximum

Branch circuit breakers
100 A maximum,
Single-, two- and three-pole

Fusible Lighting Panelboard PRL2aF

240 and 480Y/277 Vac Maximum

Main lugs only
400 A maximum

Branch overcurrent protective devices
30 A maximum,
Single-, two- and three-pole utilizing Class CC fuses

Type PRL2a-LX, Column Type

Bolt-On Circuit Breakers 240 or 480Y/277 Vac; 125/250 Vdc Maximum

Main lugs only
225 A maximum

Main circuit breaker
225 A maximum

Branch circuit breakers
100 A maximum,
Single-, two- and three-pole

Product Types, continued

Retrofit Panelboard PRL-1R and PRL-2R

Bolt-On Circuit Breakers 480Y/277 Vac; 240 Vac, 480Y/277 Vac

Main lugs only
225A maximum

Main circuit breaker
225A maximum

Branch circuit breakers
100A maximum,
Single-, two and three-pole

Type PRL3a

Bolt-On Circuit Breakers 240, 480 or 600 Vac; 250 Vdc Maximum

Main lugs only
800A maximum

Main circuit breaker
600A maximum

Branch circuit breakers
225A maximum,
Single-, two- and three-pole

Type PRL3E

Bolt-On Circuit Breakers 240, 480Y/277 or 480 Vac; 250 Vdc Maximum

Main lugs only
600A maximum

Main circuit breaker
600A maximum

Branch circuit breakers
125A maximum,
Single-, two- and three-pole

Type PRL4

Circuit Breakers or Fusible Switches 240, 480 or 600 Vac; 600 Vdc Maximum

Main lugs only
1200A maximum

Main circuit breaker
1200A maximum

Main fusible switch
1200A maximum

Branch circuit breakers
1200A maximum,
Single-, two- and three-pole

Branch fusible switches
1200A maximum,
two- and three-pole

Type PRL5P

Plug-On Circuit Breakers 240, 480 or 600 Vac; 250 Vdc Maximum

Main lugs only
1200A maximum

Main circuit breaker
1200A maximum

Branch circuit breakers
1200A maximum,
Single-, two- and three-pole

Product Types, continued

Pow-R-Command

Bolt-On Circuit Breakers 240 or 480Y/277 Vac

Main lugs only
400A maximum

Main circuit breaker
400A maximum

Branch circuit breakers
225A maximum,
Single-, two- and three-pole

Integral power switching controls

Metering Service Section

Bolt-On Circuit Breaker or Fusible Switch 240, 480 or 600 Vac

Service entrance panels combining a main disconnect with a power company metering compartment
400–1200A

Elevator Control Panelboard

Bolt-On Fusible Switches 600 Vac Maximum

Controls for up to four elevators in a single Panelboard

Main lugs only
800A maximum

Branch overcurrent devices
15–200A fusible switches with Class J fuse clips maximum

Designed to meet specific sections of various codes impacting elevators

Type PRL1a Panelboard

Contents

Description	*Page*
EZ Box and EZ Trim	
Standards and Certifications	**V2-T3-5**
Product Selection	**V2-T3-6**

Product Description

Eaton's EZ box and EZ trim represents the first significant change in panelboard box and trim designs in more than a half-century. The EZ box and EZ trim have been designed for faster, more secure and safer installations. The new EZ box and EZ trim are provided standard for Eaton's Pow-R-Line 1a and Pow-R-Line 2a lighting panelboards, as well as the Pow-R-Line 3a and Pow-R-Line 3E mid-range panelboard.

Flange Detail

Features

- Virtually eliminates sharp edges
- Trim installs in seconds rather than minutes
- Door-in-door is standard
- Ability to adjust flush box to wall irregularities
- Trim installs without the need for tools
- No exposed hardware (because there is none)

The EZ box flanges are bent and painted, which virtually eliminates the sharp edges associated with traditional boxes. Additionally, all steel panelboard chassis parts are painted. This significantly reduces potential injury for material handlers and installers. Each flange is adjustable outward up to 3/4-inch (19.1 mm). This feature allows the installer to adjust flush box applications to be level and flat with the finished wall after the wall material is installed to help correct wall irregularities. The new box flange also provides the means for attaching the EZ trim.

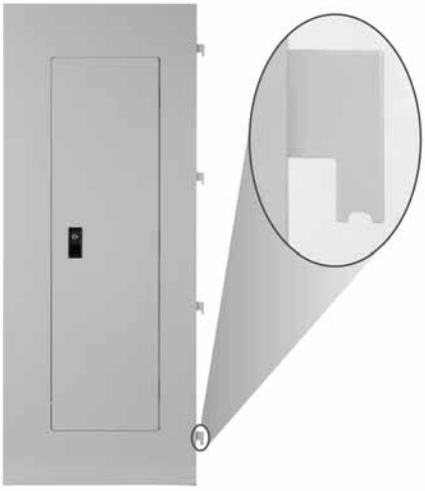

Standalone Trim and Bottom Flange Hanger with Notch

Corner Flange Detail

Fast Installation

The EZ trim incorporates a groundbreaking design that installs in seconds, rather than minutes. The standard trim features include door-in-door construction; no exposed hardware and no tools are required for installation.

Each EZ trim includes hangers attached on the right side. The bottom trim hanger has a notch in its base. To install, the bottom hanger is inserted into the bottom right side box flange opening, resting the notch on the flange.

Trim Hanger Inserted Into Box Flange

The balance of the hangers are aligned with the other flange openings and pushed in. When all hangers are in the box flange, the trim is lifted up slightly to clear the notch on the bottom hanger, and the trim in self-supported on the EZ box.

The installation is completed by swinging the trim to the closed position, then lifting and pushing slightly to the right. The trim will drop into place totally secured. The multi-point catches on the left side of the trim will lock into the left side box flange openings.

To prevent the trim from being removed by non-authorized persons, a unique sliding means automatically latches in place when the trim door is closed. Along with a new lock, the EZ trim offers a high degree of door security.

Trim Hanging on Surface Mounted Box

Standards and Certifications

When used with Eaton's panelboard chassis, EZ boxes and EZ trims meet the following applicable industry standards:

- UL 50 listed
- NEMA Standard PB1
- Federal specifications
- National Electrical Code

Listed

Product Selection

Boxes and Trims Only—Type 1

Types PRL1a, PRL2a

Box Dimensions—Inches (mm)	Height	YS Box Catalog Number	LT Trim Catalog Number	EZ Box ① Catalog Number	EZ Trim ① Catalog Number
20.00 W x 5.75 D (508.0 W x 146.1 D)	36.00 (914.4)	**YS2036**	**LT2036S or F**	**EZB2036R**	**EZT2036S or F**
	42.00 (1066.8)	**YS2042**	**LT2042S or F**	**EZB2042R**	**EZT2042S or F**
	48.00 (1219.2)	**YS2048**	**LT2048S or F**	**EZB2048R**	**EZT2048S or F**
	60.00 (1524.0)	**YS2060**	**LT2060S or F**	**EZB2060R**	**EZT2060S or F**
	72.00 (1828.8)	**YS2072**	**LT2072S or F**	**EZB2072R**	**EZT2072S or F**
	90.00 (2286.0)	**YS2090**	**LT2090S or F**	**EZB2090R**	**EZT2090S or F**

Type PRL3a

Box Dimensions—Inches (mm)	Height	YS Box Catalog Number	LT Trim Catalog Number	EZ Box ① Catalog Number	EZ Trim ① Catalog Number
20.00 W x 5.75 D (508.0 W x 146.1 D)	36.00 (914.4)	**YS2036**	**LTV2036S or F**	**EZB2036R**	**EZTV2036S or F**
	48.00 (1219.2)	**YS2048**	**LTV2048S or F**	**EZB2048R**	**EZTV2048S or F**
	60.00 (1524.0)	**YS2060**	**LTV2060S or F**	**EZB2060R**	**EZTV2060S or F**
	72.00 (1828.8)	**YS2072**	**LTV2072S or F**	**EZB2072R**	**EZTV2072S or F**
	90.00 (2286.0)	**YS2090**	**LTV2090S or F**	**EZB2090R**	**EZTV2090S or F**

Type PRL3a (800 A)

Box Dimensions—Inches (mm)	Height	YS Box Catalog Number	LT Trim Catalog Number
28.00 W x 5.75 D	36.00 (914.4)	**YS2836**	**LTV2836S or F**
	48.00 (1219.2)	**YS2848**	**LTV2848S or F**
	60.00 (1524.0)	**YS2860**	**LTV2860S or F**
	72.00 (1828.8)	**YS2872**	**LTV2872S or F**
	90.00 (2286.0)	**YS2890**	**LTV2890S or F**

Note

① EZ box must be used with EZ trim.

Pow-R-Line C Panelboards

Contents

Description	*Page*
Application Description	**V2-T3-8**
Standards and Certifications	**V2-T3-10**
Technical Data and Specifications	**V2-T3-11**
Type PRL1a	**V2-T3-26**
Type PRL1aF	**V2-T3-30**
Type PRL1a-LX	**V2-T3-34**
Type PRL2a	**V2-T3-38**
Type PRL2aF	**V2-T3-42**
Type PRL2a-LX	**V2-T3-46**
Retrofit Panelboard	**V2-T3-50**
Type PRL3a	**V2-T3-58**
Type PRL3E	**V2-T3-62**
Type PRL4	**V2-T3-66**
Type PRL4D	**V2-T3-76**
Type PRL5P	**V2-T3-86**

Product Description

Lighting and Distribution Panelboards

Eaton's assembled panelboards are designed for sequence phase connection of branch circuit devices. This allows complete flexibility of circuit arrangement (single-, two- or three-pole) to allow balance of the electrical load on each phase.

Sturdy, rigid chassis assembly ensures accurate alignment of interior with panel front; prevents flexing and minimizes possibility of loosening or damage to current carrying parts during and after installation.

Four-point in-and-out adjustment of panel interior is provided to meet critical depth dimensions on flush installations. This compensates for possible misalignment of box at installation.

Main lugs are mechanical solderless type and approved for copper or aluminum conductors.

Enclosures

Boxes are code-gauge galvanized steel, which include a painted box finished in ANSI-61 light gray to match the trim.

Standard panelboard cabinets are designed for indoor use. Alternate types are available for indoor and special purpose applications.

All enclosures are furnished in accordance with Underwriters Laboratories standards and include wiring gutters with proper wire bending space. Special cabinets can be provided at an additional charge.

The box dimensions shown are inside dimensions. For outside dimensions, add 1/4-inch (6.4 mm).

Standard panelboard boxes are supplied without knockouts (blank endwalls).

Fronts

Fronts (trims) for all panelboards are made of code-gauge steel and have a high durability ANSI-61 light gray finish applied by a baked-on polyester powder coating paint system.

The fronts for lighting and appliance branch circuit panelboards and small power distribution panelboards include a door with rounded corners and concealed hinges. A flush-type latch and lock assembly is included. All locks are keyed alike. These trims are available in both surface- and flush-mounted designs.

EZ Trim Features Standard Door-in-Door with No Exposed Hardware or Sharp Edges (no Tools are Required for Installation)

The Three-Piece Trim for Larger Power Distribution Panelboards Provides for Easy Handling and Installation

Fronts for power distribution panelboards utilize a unique breaker front cover design in which each device has a dedicated bolt-on steel cover. The individual covers form a single deadfront for the panelboard that is used in conjunction with two wiring gutter covers to complete the trim. A door is not finished as part of the standard offering on these panelboards but can be provided, for an additional charge, using a deeper than standard box.

Application Description

Panelboard Selection Factors

In selecting a panelboard, the following factors must be considered:

- Service (voltage and frequency)
- Interrupting capacity (fully or series rated)
- Ampere rating of main
- Ampere ratings of branches
- Environment

Panelboard Short-Circuit Rating

The short-circuit rating of Eaton's assembled panelboards are test verified by, and listed with, Underwriters Laboratories (UL). Generally, these ratings are that of the lowest interrupting rated device in the panel.

Certain exceptions to this rule exist where branch devices have been UL tested in combination with specific main devices having a higher interrupting rating. Where these defined main devices and branch breaker combinations are utilized, the series short-circuit rating of the assembled panelboard will be the same as the tested rating of the approved rated main device in series with the branches. Available main and branch breaker combinations are tabulated starting on **Page V2-T3-16**. All combinations shown are UL tested and listed.

These series ratings apply to panels having main devices, or main lug only panelboards fed remotely by the device listed in the series ratings chart as the main, for which UL listed tests were conducted.

Service Entrance Equipment

The National Electrical Code (NEC) requires that:

- A panel used as service entrance equipment must be located near the point where the supply conductors enter the building
- A panelboard having main lugs only shall have a maximum of six service disconnects to de-energize the entire panelboard from the supply conductors. Where more than six disconnects are required, a main service disconnect must be provided
- A disconnectable electrical bond must be provided between the neutral and ground
- A service entrance type UL label must be factory installed
- Ground fault protection of equipment shall be provided for each service disconnect rated 1000A or more if the electrical service is a solidly grounded wye system of more than 150V to ground, but not exceeding 600V phase-to-phase

Note: Service entrance panels must be identified as such on the order.

Panelboard Standards

In 2008, both the National Electrical Code (Article 408) and UL 67 were updated to remove the mandated 42-circuit limitation. Eaton offers panelboards with more than 42 circuits for those jurisdictions that have adopted the 2008 NEC or later.

For jurisdictions that have| not adopted the 2008 or later version of the National Electrical Code, the 42-circuit limitation for Lighting and Appliance Branch Panelboards remains in place. Check with your local code officials to determine specific jurisdiction status.

Panelboard Installation

NEC requires that the operating handle of the topmost mounted device be no more than 6 feet 7 inches (2006.6 mm) above the finished floor and should be installed per NEC and manufacturer's instructions.

Additional boxes and fronts are required when the components required for one panelboard exceed the standard box dimensions.

Multi-Section Panelboards

When two or more separate enclosures are required, separate fronts for each box are standard. A common front can be furnished at additional charge.

Interconnecting Multi-Section Panelboards

When a panelboard, for connection to one feeder, must be furnished in more than one section (Box), each section must be furnished with main bus and terminals of the same rating, unless a main overcurrent device is provided in each section.

Sub-feed or through-feed provisions must also be included (and priced) to provide connection capability to the second section.

Note: Sub-feed or through-feed lugs cannot be used on any panelboard that is not protected by a single main overcurrent device either in the panelboard or immediately upstream, i.e., service entrance panelboards with main lugs only using the six disconnect rule.

Sub-Feed Lugs

Sub-feed lugs (see figure below) are one means of interconnecting multi-section panels. The sub-feed (second set of) lugs are mounted directly beside the main lugs. These are required in each section except the last panel in the lineup. The feeder cables are brought into the wiring gutter of the first section and connected to the main lugs. Another set of the same size cables are connected to the sub-feed lugs (Section 1) and are carried over to the main lugs of the adjacent panel. Cross connection cables are not furnished by Eaton. Sub-feed lugs are only available on main lug only panels.

Note: Sub-feed lugs may not be used on main lug only (six disconnect rule) service entrance panels.

Sub-Feed Lugs

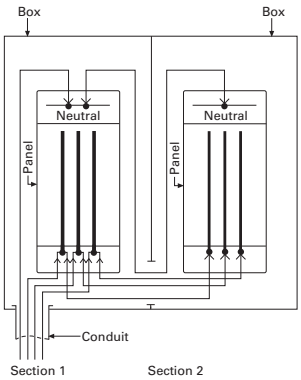

Through-Feed Lugs

Through-feed lugs (see figure below) are another method to interconnect multi-section panelboards. The incoming feeder cables are connected to the main lugs or main breaker at the bottom of panel (Section 1). Another set of lugs (through-feed) are located at the opposite end of the main bus. The interconnecting cables are connected to the through-feed lugs in Section 1 and are carried over to the main lugs in Section 2. The connection arrangement could be reversed, i.e., main lugs at top; through-feed lugs at bottom end of panel. Cross cables are not furnished by Eaton.

Note: Through-feed lugs may not be used on main lug only (six disconnect rule) service entrance panels.

Through-Feed Lugs

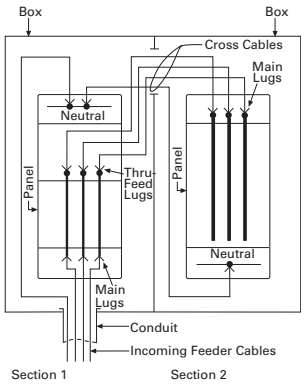

Multiple Section Panelboard—Flush Mounted

Shown below is the standard method for flush mounting multiple section lighting and distribution panelboards using standard flush trims.

Multiple Section Panelboard Flush Mounted—Dimensions in Inches (mm)

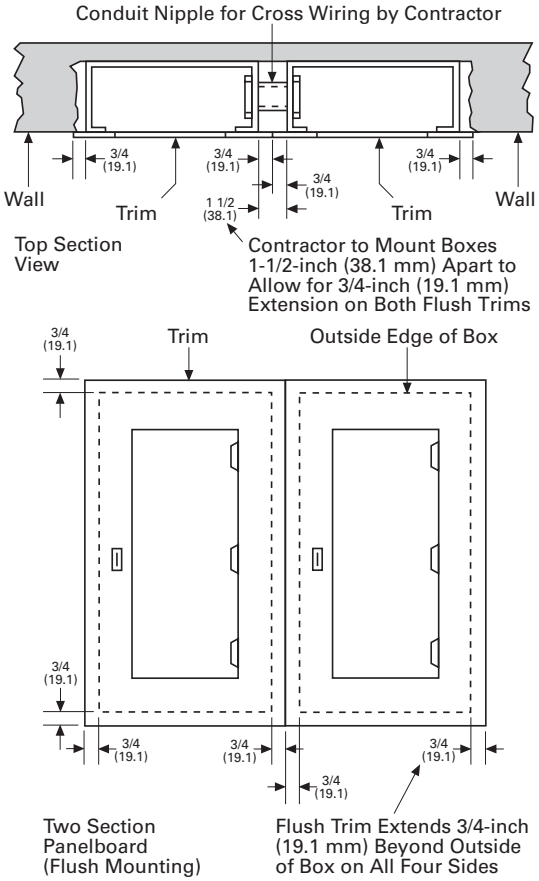

Overcurrent Protection

The following requirements will be found in the NEC:

Each lighting and appliance branch circuit panelboard shall be individually protected on the supply side by not more than two main circuit breakers or two sets of fuses having a combined rating not greater than that on the panelboard.

Branch Circuit Loading for Lighting Panels

The size of mains and branches should be selected based on the following:

- Motor circuits: NEC Article 430
- Diversity factor
- Provision for future loading

Exception Number 1: Individual protection for a lighting panelboard is not required when the panelboard feeder has overcurrent protection not greater than that of the panelboard.

Exception Number 2: For existing installations, individual protection for lighting panelboards is not required where such panelboards are used as service equipment in supplying an individual residential occupancy and where any bus supplying 15 or 20A circuits is protected on the supply side by an overcurrent device.

Ambient Temperatures

The primary function of an overcurrent device is to protect the conductor and its insulation against overheating. In selecting the size of the devices and conductors, consideration should be given to the ambient temperature surrounding the conductors within and external to the panelboard. Cumulative heating within the panelboard may cause premature operation of the overcurrent protective devices.

Underwriters Laboratories test procedures are based, in part, on 80% loading of panelboard branch circuit devices. The NEC limits the loading of overcurrent devices in panelboards to 80% of rating where in normal operation the load will continue for three hours or more. Further derating may be required, depending on such factors as ambient temperature, duty cycle, frequency or altitude.

Exception: There is one exception to this rule in both UL and NEC. It applies to assemblies and overcurrent devices that have been listed for continuous duty at 100% of its rating.

Special Conditions

Standard panelboards, assembled with standard components, are adequate for most applications. However, special consideration should be given to those required for application under special conditions such as:

- Excessive vibration or shock
- Frequencies above 60 cycles
- Altitudes above 6600 feet (2011.7m)
- Damp environment (possible fungus growth)
- Compliance with federal, state and municipal electrical codes and standards

Seismic Considerations

The Uniform Building Code® and the International Building Code, as well as local and state building codes, place an emphasis on seismic building design requirements. Electrical distribution systems are treated as attachments to the building and therefore, fall into this category.

All Eaton panelboards are seismic qualified at the highest possible level, and have been tested in accordance with ANSI C37.81. This standard quantifies actual earthquake conditions, as well as equipment seismic capability.

Harmonic Currents

Standard panelboard neutrals are rated for 100% of the panelboard current. However, since harmonic currents can cause overheated neutrals, an option is provided for neutrals to be rated at 200% (1200A maximum neutral for 600A main bus) of the panelboard phase current.

Panelboards with the 200% rated neutral are UL listed as suitable for use with non-linear loads.

Prior to specifying the 200% rated neutral, Eaton recommends a harmonic survey be conducted of the distribution system, be it new or existing.

Surge Protective Devices

The quality of power feeding sensitive electronic loads is critical to the reliable operation of any facility. In modern offices, hospitals, and manufacturing facilities, the most frequent causes of microprocessor-based equipment downtime and damage are voltage transients and electrical noise.

Electrical loads and microprocessor-based equipment are highly susceptible to both high and low energy transients. High energy transients include lightning induced surges and power company switching. These high energy transients can destroy components instantly.

More frequently the electrical system experiences low energy transients and high frequency noise.

The effects of continual low energy transients and high frequency noise can cause erratic equipment performance or sudden failure of electronic circuit board components.

Eaton can provide protective and diagnostic systems integral to panelboards. The surge protective device (SPD) is integrated into the panelboards using a "zero lead length" direct bus bar connection.

Pow-R-Line 4

The SPD protects sensitive electronic equipment from the damaging effects of high and low energy transients, as well as high frequency noise.

Standards and Certifications

Eaton's panelboards are designed to meet the following applicable industry standards, except where noted:

- Underwriters Laboratories:
  - Panelboards: UL 67
  - Cabinets and Boxes: UL 50

Note: Only panelboards containing UL listed devices can be UL labeled.

- National Electrical Code
- NEMA Standards: PB 1
- Federal Specification W-P-115c:
  - Circuit Breakers—Type I Class I
  - Fusible Switch—Type II Class I

Listed

Technical Data and Specifications

Panelboard Selection Guide

Panelboard Type	Device Type	Maximum Voltage Rating AC	Maximum Voltage Rating DC	Maximum Main Rating (Amperes) MLO	Maximum Main Rating (Amperes) Main Device	Branch Circuits Ampere Range	Sub-Feed Breaker Maximum Amperes	AC Interrupting Capacity rms Symmetrical Amperes (kA) Fully Rated	AC Interrupting Capacity rms Symmetrical Amperes (kA) Series Rated
PRL1a	Breaker	240	—	600	600	15–100	600	10–22	22–100
PRL1R	Breaker	240	—	225	225	15–100	—	10–22	22–100
PRL1aF	Fusible	240	—	400	400	15–30	400	200	—
PRL1a-LX	Breaker	240	—	225	225	15–100	—	10–22	22–100
PRL2a	Breaker	240	250	600	600	15–100	600	65	65–200
	Breaker	480Y/277	250	600	600	15–100	600	14	22–150
PRL2R	Breaker	240	—	225	225	15–100	—	10–22	22–200
	Breaker	480Y/277	—	225	225	15–100	—	14	22–100
PRL2aF	Fusible	480Y/277	—	400	400	15–30	400	200	—
PRL2a-LX	Breaker	240	250	225	225	15–100	—	65	65–200
	Breaker	480Y/277	250	225	225	15–100	—	14	22–150
PRL3a	Breaker	240	250	800	600	15–225	600	10–200	22–200
	Breaker	480	250	800	600	15–225	600	14–100	22–150
	Breaker	600	250	800	600	15–225	600	14–35	—
PRL3E	Breaker	240	250	600	600	15–125	400	25–100	100–200
	Breaker	480Y/277	250	600	600	15–125	400	18–65	65–100
	Breaker	480	250	600	600	15–125	400	18–65	65–100
PRL4B	Breaker	240	600	1200	1200	15–1200	—	10–200	22–200
	Breaker	480	600	1200	1200	15–1200	—	14–200	22–150
	Breaker	600	600	1200	1200	15–1200	—	14–200	—
PRL4D	Breaker	240	—	1200	1200 ①	600	—	65–200	—
	Breaker	480	—	1200	1200 ①	600	—	35–100	—
	Breaker	600	—	1200	1200 ①	600	—	18–50	—
PRL4F	Fusible	240	250	1200	1200	30–1200	—	100–200	—
	Fusible	600	250	1200	1200	30–1200	—	100–200	—
PRL5P	Breaker	240	250	1200	1200	15–1200	—	10–200	22–200
	Breaker	480	250	1200	1200	15–1200	—	14–200	22–150
	Breaker	600	250	1200	1200	15–1200	—	14–200	—
PRC100 PRC25	Breaker	240	—	400	400	15–225	—	10–65	22–100
	Breaker	480Y/277	—	400	400	15–225	—	14	65–100
Elevator Control	Fusible	240	—	800	800	15–200	—	200	—
	Fusible	480Y/277	—	800	800	15–200	—	200	—
	Fusible	480	—	800	800	15–200	—	200	—

Note

① Fixed mounted only.

Terminal Wire Ranges, Pressure-Type Al/Cu Terminals Except as Noted

Note: All terminal sizes are based on wire ampacities corresponding to those shown in NEC Table 310.16 under the 75°C insulation columns (75°C wire). The use of smaller size, (in circular mills), regardless of insulation temperature rating, is not permitted.

Where copper-aluminum terminals are supplied on designated panelboard types, best results are obtained if a suitable joint compound is applied when aluminum conductors are used.

Check Eaton's standard terminal sizes versus customer requirements. In particular, 400 and 800A breakers often require nonstandard lugs.

Optional 750 kcmil mechanical screw-type terminals are available upon request. Panelboard dimensions may be affected, refer to Eaton.

Standard Main Lug Terminals

	Wire Size Ranges for Ampere Capacity						
Panel Type	**100 A**	**225 A**	**250 A**	**400 A**	**600 A**	**800 A**	**1200 A**
PRL1a	#12–1/0	#6–300 kcmil	—	(2) #4–500 kcmil	(2) 4/0–500 kcmil	—	—
PRL2a	#12–1/0	#6–300 kcmil	—	(2) #4–500 kcmil	(2) 4/0–500 kcmil	—	—
PRL1R	#12–1/0	#6–300 kcmil	—	(2) #4–500 kcmil	—	—	—
PRL2R	#12–1/0	#6–300 kcmil	—	(2) #4–500 kcmil	—	—	—
PRL1aF	#12–1/0	#6–300 kcmil	—	(2) #4–500 kcmil	—	—	—
PRL2aF	#12–1/0	#6–300 kcmil	—	(2) #4–500 kcmil	—	—	—
PRL3a	#12–1/0	—	#6–350 kcmil	(2) #4–500 kcmil	(2) #4–500 kcmil	(3) #4–500 kcmil	—
PRL3E	#12–1/0	—	#6–350 kcmil	(2) #4–500 kcmil	(2) #4–500 kcmil	—	—
PRL4	—	—	#4–500 kcmil	(2) #4–500 kcmil	(2) #4–500 kcmil	(3) #4–500 kcmil	(4) #4–500 kcmil
PRL1a-LX	#12–1/0	#6–300 kcmil	—	—	—	—	—
PRL2a-LX	#12–1/0	#6–300 kcmil	—	—	—	—	—
PRC100	#12–1/0	—	#6–350 kcmil	(2) #4–500 kcmil	—	—	—
PRC25	#12–1/0	#6–300 kcmil	—	(2) #4–500 kcmil	—	—	—
PRL5P	—	—	—	(1) #1/0–500 kcmil or (2) #1/0–250 kcmil	(2) #4–500 kcmil	(2) #2–500 kcmil or (3) #2–400 kcmil	(4) #4–750 kcmil
Elevator Control	—	—	#4–500 kcmil	(2) #4/0–500 kcmil	(2) #4/0–500 kcmil	(3) #4/0–500 kcmil	—

Standard Circuit Breaker Terminals

Breaker Type	Ampere Rating	Wire Range
BAB, QBHW, BABRSP, HQP, QPHW	15–70	#14–#4
	90–100	#8–1/0
EDB, EDS, ED, EDH, EDC	100–225	#4–4/0 or #6–300 kcmil
EGB, EGE, EGS, EGH	15–50	#14–3/0 AL/CU
	60–125	#6–3/0 AL/CU
EHD, FDB, FD, HFD, FDC, HFDDC ②	15–100	#14–1/0
	125–225	#4–4/0
FCL	15–100	#14–1/0
GHB, HGHB, GHQ, GHQRSP	15–20	#14–#10
	25–100	#10–1/0
EGB, EGS, EGH	15–50	#14–1/0
	60–125	#6–2/0
JD, HJD, JDC, HJDDC ②	70–250	#4–350 kcmil
DK	250–350	250–500 kcmil
	400	(2) 3/0–250 kcmil or (1) 3/0–500 kcmil
KD, HKD, KDC, HKDDC, ② CKD, CHKD	225	(1) #3–350 kcmil
	350	(2) 3/0–250 kcmil or
	400	(2) 3/0–250 kcmil or (1) 3/0–500 kcmil
LHH	150–400	#2–500 kcmil
	150–400	(2) #2–500 kcmil
	150–400	(1) 500–750 kcmil
LGE, LGH, LGC, LGU, LHH ①	250–400	(1) #2–500 kcmil
	500–600	(2) #2–500 kcmil
LD, HLD, LDC, HLDDC ② CLD, CHLD	300–500	(2) 250–350 kcmil
	600	(2) 400–500 kcmil
MDL, HMDL, HMDLDC ② CMDL, CHMDL	400–600	(2) #1–500 kcmil
	700–800	(3) 3/0–400 kcmil
ND, HND, CND, CHND, NDC, CNDC	800–1000	(3) 3/0–400 kcmil
	1200	(4) 4/0–500 kcmil
LCL	125–225	(1) #6–350 kcmil
	250–400	(1) #4–250 kcmil and (1) 3/0–600 kcmil
FB-P	15–100	#14–1/0
LA-P	70–225	#6–350 kcmil
	250–400	(1) #4–250 kcmil and (1) 3/0–600 kcmil
NB-P, NBDC ②	300–700	(2) #1–500 kcmil
	800	(3) 3/0–400 kcmil

FDPW Switch Terminals

Ampere Rating	Wire Range
30	#14–1/0
60	#14–1/0
100	#14–1/0
200	#4–300 kcmil
400	250–750 kcmil or (2) 3/0–250 kcmil
600	(2) #4–600 kcmil or (4) 3/0–250 kcmil
800	(3) 250–750 kcmil or (6) 3/0–250 kcmil
1200	(4) 250–750 kcmil or (8) 3/0–250 kcmil

Elevator Control Panel Feeder Terminals

Ampere Rating	Wire Range
30	#14–1/0
60	#14–1/0
100	#14–1/0
200	#4–300 kcmil

Notes

① LHH is 400A maximum.

② Suitable for DC applications only.

Selection Guide

Molded Case Circuit Breaker Ratings

Note: Circuit breakers equal or exceed Federal Specification W-C-375b requirements for the particular class associated with each circuit breaker type.

Breaker Type	Continuous Ampere Rating	Number of Poles	Maximum Voltage AC	UL Listed Interrupting Ratings—kA Symmetrical Amperes AC Rating Volts 120/240	240	277	480	600	DC Rating Volts ① 125	250
BAB ②③, HQP ②③	15–70	1	120	10	—	—	—	—	—	—
	15–100	2	120/240	10	—	—	—	—	—	—
	15–100	2, 3	240	—	10	—	—	—	—	—
BABRP, BABRSP ②	15–30	1	120	10	—	—	—	—	—	—
	15–30	2	120/240	10	—	—	—	—	—	—
QBGF, QBGFEP, QPGF, QPGFEP, QBAF, QBAG	15–40	1	120	10	—	—	—	—	—	—
	15–50	2	120/240	10	—	—	—	—	—	—
	15–20	1	120	10	—	—	—	—	—	—
	15–20	2	120/240	10	—	—	—	—	—	—
QBHW ②③, QPHW ②③	15–70	1	120	22	—	—	—	—	—	—
	15–100	2	120/240	22	—	—	—	—	—	—
	15–100	2, 3	240	—	22	—	—	—	—	—
QBHGF, QBHGFEP, QPHGF, QPHGFEP	15–30	1	120	22	—	—	—	—	—	—
	15–30	2	120/240	22	—	—	—	—	—	—
GQ, GHQ ②, GHQRSP, GHB ②③	15–20	1	277	65	—	14	—	—	—	—
	15–100 ④	1	277	65	—	14	—	—	14	—
	15–100 ④	2, 3	480Y/277	—	65	—	14	—	—	14
HGHB ②, GHBGFEP	15–30	1	277	65	—	25	—	—	—	—
	15–60	1	277	—	—	14	—	—	—	—
GHBS	15–30	1	277	65	—	14	—	—	—	—
	15–30	2	480Y/277	—	65	—	14	—	—	—
EHD ②③	15–100	1	277	—	—	14	—	—	10	—
	15–100	2, 3	480	—	18	—	14	—	—	10
EGB	15–125	1	277	35	35	18	—	—	10	—
	15–125	2, 3	480	—	35	—	18	—	—	10
EGS	15–125	1	277	100	—	35	—	—	35	—
	15–125	2, 3	480	—	100	—	35	—	—	35
EGH	15–125	1	277	200	—	65	—	—	42	—
	15–125	2, 3	480	—	200	—	65	—	—	42
FDB ⑤, FD ②③	15–150	2, 3	600	—	18	—	14	14	—	10
	15–150	1	277	—	—	35	—	—	10	—
	15–225	2, 3	600	—	65	—	35	18	—	10
HFD ②③	15–150	1	277	—	—	65	—	—	10	—
	15–225	2, 3	600	—	100	—	65	25	—	22

Notes

① DC ratings apply to substantially non-inductive circuits.
② 15 and 20A single-pole switching duty rated for fluorescent applications.
③ Single-, two- and three-pole HACR rated.
④ DC rated single-pole, 15–70A only.
⑤ Two- and three-pole HACR rated.

Selection Guide, continued

Molded Case Circuit Breaker Ratings, continued

Note: Circuit breakers equal or exceed Federal Specification W-C-375b requirements for the particular class associated with each circuit breaker type.

				UL Listed Interrupting Ratings—kA Symmetrical Amperes						
				AC Rating Volts					DC Rating Volts ①	
Breaker Type	**Continuous Ampere Rating**	**Number of Poles**	**Volts AC**	**120/240**	**240**	**277**	**480**	**600**	**125**	**250**
FDC ②	15–225	2, 3	600	—	200	—	100	35	—	22
FCL	15–100	2, 3	480	—	200	—	150	—	—	—
EDB ②	100–225	2, 3	240	—	22	—	—	—	10	—
EDS ②	100–225	2, 3	240	—	42	—	—	—	10	—
ED ②	100–225	2, 3	240	—	65	—	—	—	10	—
EDH ②	100–225	2, 3	240	—	100	—	—	—	10	—
EDC ②	100–225	2, 3	240	—	200	—	—	—	10	—
EGB ②	15–125	1, 2, 3	240	—	25	—	18	—	—	—
EGE ②	15–125	1, 2, 3	240	—	—	—	—	18	—	—
EGS ②	15–125	1, 2, 3	240	—	85	—	35	22	—	—
EGH ②	15–125	1, 2, 3	240	—	100	—	65	25	—	—
JD ②	70–250	2, 3	600	—	65	—	35	18	—	10
HJD ②	70–250	2, 3	600	—	100	—	65	25	—	22
JDC ②	70–250	2, 3	600	—	200	—	100	35	—	22
DK	250–400	2, 3	240	—	65	—	—	—	—	10
KD, CKD ③	100–400	2, 3	600	—	65	—	35	25	—	10 ④
HKD, CHKD ③	100–400	2, 3	600	—	100	—	65	35	—	22 ④
LHH ⑤	150–400	2, 3	480	—	100	—	65	35	—	42
KDC	100–400	2, 3	600	—	200	—	100	65	—	22 ④
LCL ⑤	125–400	2, 3	600	—	200	—	200	100	—	—
LGE	250–600	3	600	—	65	—	35	18	—	22
LGC ⑤	250–600	2, 3	600	—	200	—	100	50	—	42
LGU ⑤	250–600	2, 3	600	—	200	—	150	65	—	50
LD ⑤, CLD ③⑤	300–600	2, 3	600	—	65	—	35	25	—	22 ④
LGH	250–600	3	600	—	100	—	65	35	—	22
HLD ⑤, CHLD ③⑤	300–600	2, 3	600	—	100	—	65	35	—	25 ④
LDC ⑤, CLDC ③⑤	300–600	2, 3	600	—	200	—	100	50	—	25 ④
MDL ⑤, CMDL ③⑤	400–800	2, 3	600	—	65	—	50	25	—	22 ④
HMDL ⑤, CHMDL ③⑤	400–800	2, 3	600	—	100	—	65	35	—	25 ④
ND ⑤, CND ③⑤	600–1200	2, 3	600	—	65	—	50	25	—	—
HND ⑤, CHND ③⑤	600–1200	2, 3	600	—	100	—	65	35	—	—
NDC ⑤, CNDC ③⑤	600–1200	2, 3	600	—	200	—	100	65	—	—
Integrally Fused, Current Limiting Circuit Breakers										
FB-P	15–100	2, 3	600	—	200	—	200	200	—	⑥
LA-P	70–400	2, 3	600	—	200	—	200	200	—	⑥
NB-P	300–800	2, 3	600	—	200	—	200	200	—	⑥

Notes

① DC ratings apply to substantially non-inductive circuits.
② Two- and three-pole HACR rated.
③ 100% rated circuit breaker.
④ DC rating not available with electronic trip.
⑤ Available with integral ground fault protection.
⑥ 100k based on NEMA test procedure.

Series Rated Combinations

Underwriters Laboratories permits panelboards to be labeled with a short-circuit rating of up to 200 kA symmetrical where UL listed combinations of main and branch circuit breakers are used.

These combinations consist of main breakers or fusible devices connected ahead of, and in series with approved conventional breakers used as branch devices.

Two arrangements are acceptable and comply with UL standards for panelboards. **The main circuit breaker or fusible switch may be installed in the panel as a main device, or it may be mounted remote, (directly upstream) from the panel.** In either case, the approved main and branch combinations must be followed. These arrangements are acceptable and are UL listed having been tested in accordance with UL 67 standards.

From the tables that follow, specific combinations of main devices (upstream) and branch devices (downstream), series connected and electrically adjacent in the system, may be selected to qualify the assembled panelboard for the short-circuit ratings shown.

Applying Series Ratings

The following is provided to use the series rating tables on the following pages.

1. Determine the available system voltage and fault current.
2. Select the appropriate table using the system voltage.
3. Use the appropriate "Series Equipment Rating" column equal to, or greater than, the available fault current, to determine the allowable UL recognized combinations of main (upstream) and branch (downstream) overcurrent devices. Main devices are shown in bold/shaded areas. Respective branch breakers are shown directly below their associated main device. If a rating is not initially found in a column, first look to the columns to the right for higher "Series Equipment Ratings" within the same table. If still not found, use ratings from table of a higher system voltage (higher numbered table(s).

Page V2-T3-17
120/240 Vac—Breaker/Breaker

Page V2-T3-19
240 Vac—Breaker/Breaker

Page V2-T3-21
277 Vac—Breaker/Breaker

Page V2-T3-21
480Y/277 Vac—Breaker/Breaker

Page V2-T3-22
480 Vac—Breaker/Breaker

Page V2-T3-23
600 Vac—Breaker/Breaker

Page V2-T3-23
120/240 Vac—Fuse/Breaker

Page V2-T3-24
240 Vac—Fuse/Breaker

Page V2-T3-24
277 Vac—Fuse/Breaker

Page V2-T3-25
480Y/277 Vac—Fuse/Breaker

Page V2-T3-25
480 Vac—Fuse/Breaker

Page V2-T3-25
600 Vac—Fuse/Breaker

Page V2-T3-25
Triple Series Ratings

Series Rating Tables

120/240 Vac—Breaker/Breaker Series Ratings

Main devices are shown at top in shaded area. Respective branch devices shown directly below.

Main Breaker Maximum Amperes	Series Equipment Rating—kA Symmetrical 18	22	42	65			100			200	
100	**EHD**	**QBHW**		**GB, GHB**			**FB-P**			**FCL**	
	BA, BAB BABRP BABRSP HQP QBGF QBAF	**QPHW** BA, BAB HQP QBGF QPGF QBAF		BA, BAB BABRP BABRSP HQP QBGF QPGF QBAF QBAG QBHW QPHW			BA, BAB BABRP BABRSP HQP QBGF QPGF QBAF QBAG QBHW QPHW EHD FD			BA, BAB BABRP BABRSP HQP QBGF QPGF QBAF QBAG QBHW QPHW GB, GHB GHQ EHD FD HFD	
125	**FDB**						**EGS**				
	BA, BAB HQP QBGF QBAF QBAG						GHQ, GHB				
150	**FDB**										
	BA, BAB HQP QBGF QBAF QBAG										
200							**LA-P**				
							BA, BAB HQP QBHW QPHW EHD FD				
225		**EDB**	**EDS**	**ED, FD, FDE**			**EDH, CHH**	**HFD, HFDE**	**FDC**		**FDC**
		BA, BAB BABRP BABRSP HQP QBGF QPGF QBHGF QPHGF QBHW QPHW QBAF QBAG	BA, BAB BABRP BABRSP HQP QBGF QPGF QBHGF QPHGF QBHW QPHW QBAF QBAG	BA, BAB BABRP BABRSP HQP QBGF QPGF QBAF QBAG QBHW QBHGF			BA, BAB BABRP BABRSP HQP QBGF QPGF QBAF QBAG	BA, BAB HQP QBGF QBAF QBAG QBHW QPHW QBHGF GB, GHB GHQ, GHQRSP EHD FD, EGS	BA, BAB HQP QBHW QPHW		GB, GHB GHQ GHQRSP EHD FD HFD EGS EGH
250				**JD, JDB**	**HJD**	**JDC**	**HJD**	**JDC**		**JDC**	
				BA (15–70A) BAB (15–70A) HQP (15–70A) QBHW QPHW EHD	BA, BAB HQP QBHW QPHW	QBGF QPGF QBAF QBAG	GB, GHB EHD FD EGS	BA, BAB HQP QBHW QPHW		GB, GHB EHD FD HFD EGS EGH	

120/240 Vac—Breaker/Breaker Series Ratings, continued

Main devices are shown at top in shaded area. Respective branch devices shown directly below.

Main Breaker Maximum Amperes	Series Equipment Rating—kA Symmetrical 18	22	42	65			100		200	
400		**DK, KD KDB**	**DK, KD KDB, CKD**	**HKD, CHKD**	**DK, KD KDB CKD EHD**	**KDC**	**HKD CHKD**	**KDC**	**KDC**	**LCL**
		BA, BAB BABRP BABRSP HQP QBGF QPGF QBAF QBAG	BA (15–70A) BAB (15–70A) BABRP BABRSP HQP (15–70A) QBHW QPHW	BA (15–70A) BAB (15–70A) BABRP BABRSP HQP (15–70A) QBHW QPHW		BA (15–70A) BAB (15–70A) HQP (15–70A)	GB, GHB EHD FD EGS ①	QBHW QPHW	GB, GHB EHD FD HFD EGS EGH	BA, BAB HQP QBGF QPGF QBAF QBAG QBHW QPHW GB, GHB EHD FD HFD
600							**CHLD, HLD**			
							EHD			
800							**HMDL**			
							EHD			
1200							**HND**			
							EHD			

Note

① Not valid with CHKD.

240 Vac—Breaker/Breaker Series Ratings

For single- and two-pole 120/240 volt rated breakers (BA, BAB, HQP, QBHW, QPHW), see **Page V2-T3-17**.
Main devices are shown at top in shaded area. Respective branch devices shown directly below.

Main Breaker Maximum Amperes	Series Equipment Rating—kA Symmetrical 18	22	42	65		100			200
100	**EHD** BAB_H HQP_H	**QBHW_H** **QPHW_H** BAB_H HQP_H		**GB, GHB** BAB_H HQP_H QBHW_H QPHW_H		**FB-P** BAB_H HQP_H EHD FDB FD			**FCL** BAB_H HQP_H QBHW_H QPHW_H GB, GHB EHD FD, FDE FDB HFD, HFDE
125						**EGH** GHB			
150	**FDB** BAB_H HQP_H								
200						**LA-P** BAB_H HQP_H QBHW_H QPHW_H EHD FDB FD JD, JDB			
225		**EDB** HQP_H BAB_H QBHW QPHW	**EDS** HQP_H BAB_H QBHW QPHW	**ED** BAB_H HQP_H QBHW_H	**FD, FDE** BAB_H HQP_H QBHW_H QPHW_H EHD (15–70A) FDB	**EDH, EDC** BAB_H HQP_H	**HFD, HFDE** BAB_H HQP_H QBHW_H QPHW_H GB, GHB EHD FDB FD, FDE	**FDC** BAB_H HQP_H QBHW_H QPHW_H	**FDC** GB, GHB EHD FDB FD, FDE HFD, HFDE
			CHH BAB_H						
250				**JD, JDB** BAB_H (15–70A) HQP_H (15–70A) QBHW_H QPHW_H EHD FDB	**HJD** BAB_H (15–70A) HQP_H (15–70A) QBHW_H QPHW_H	**HJD** GB, GHB EHD FD FDB ED JD, JDB EGS	**JDC** BAB_H HQP_H QBHW_H QPHW_H		**JDC** GB, GHB EHD FD, FDE FDB HFD, EDB, EDS, HFDE ED EDH JD, JDB HJD, EGS, EGH

240 Vac—Breaker/Breaker Series Ratings, continued

For single- and two-pole 120/240 volt rated breakers (BA, BAB, HQP, QBHW, QPHW), see **Page V2-T3-17**.
Main devices are shown at top in shaded area. Respective branch devices shown directly below.

Main Breaker Maximum Amperes	Series Equipment Rating—kA Symmetrical 65	100		200	
400	**DK, KD, KDB** **CKD** BAB_H HQP_H QBHW_H QPHW_H EHD FDB	**HKD, CHKD** QBHW_H ① QPHW_H ① GB, GHB EHD FDB, FDE FD, EDB, EDS ED JD, JDB DK, KD, KDB EGS ②	**KDC** QBHW_H QPHW_H	**KDC** GB, GHB EHD FDB FD, FDE, HFDE HFD, EDB, EDS ED EDH JD, JDB HJD DK, KD, KDB HKD	**LCL** BAB_H HQP_H QBHW_H QPHW_H GB, GHB EHD FDB, FDE, HFDE FD, HFD, EDB, EDS ED EDH JD, JDB HJD DK, KD, KDB HKD
500		**NB-P** JD, JDB KD, KDB, DK CKD			
600		**HLD, HLDB, CHLD** GB ①, GHB ① FD, EDB, EDS ED, EHD JD, JDB KD, KDB, DK, CKD LD, LDB		**LDC** EDB, EDS, ED EDH	
800		**NB-P** KD, KDB, DK	**HMDL** EHD FD		
1200		**HND, CHND** EDB, EDS, ED EHD			**NDC** EDB, EDS, ED EDH
2500		**RD** EDB, EDS, ED			**RDC** EDB, EDS, ED EDH

Notes

① Valid on two- and three-pole breakers only. Not valid for single-pole.

② Not valid with CHKD.

277 Vac—Breaker/Breaker Series Ratings

Main devices are shown at top in shaded area. Respective branch devices shown directly below.
All ratings in this table apply to single-pole branch breakers only. For two- and three-pole branch breakers, see other tables.

Main Breaker Maximum Amperes	Series Equipment Rating—kA Symmetrical 22	25	35	65	100		150
100							**FCL** GHB GHQ, GHQRSP EHD FD HFD
125			**EGS** GHQ GHB	**EGH** GHQ GHB			
225			**FD, FDE** GHB GHQ GHQRSP ①	**HFD, HFDE** GHB, GHQRSP ② GHQ EHD FD	**FDC** GHB EHD FD HFD		
250	**JD, JDB** GHB		**JD, JDB** GHB (15–50A)	**HJD** GHB (15–50A) EHD FD	**LCL** GHBS	**JDC** GHB EHD FD HFD	
400	**KD, KDB** **CKD** GHB	**HKD** **CHKD** GHB	**KD, KDB** **CKD** GHB (15–50A) EHD FD	**HKD, CHKD** GHB (15–50A) EHD FD	**KDC** GHB (15–50A) EHD FD HFD		**LCL** GHB EHD FD HFD

480Y/277 Vac—Breaker/Breaker Series Ratings

Main devices are shown at top in shaded area. Respective branch devices shown directly below.
All ratings in this table apply to two- and three-pole branch breakers only. For single-pole branch breakers, see table above.

Main Breaker Maximum Amperes	Series Equipment Rating—kA Symmetrical 22	25	35	65	100	150
100						**FCL** GHB, GHQRSP
125			**EGS** GHB	**EGH** GHB		
225			**FD, FDE** GHB, GHQRSP ①	**HFD, HFDE** GHB, GHQRSP ②	**FDC** GHB	
250	**JD, JDB** GHB		**JD, JDB** GHB (15–50A)	**HJD** GHB (15–50A)	**JDC** GHB	
400	**KD, KDB** **CKD** GHB	**HKD, CHKD** GHB	**KD, KDB** **CKD** GHB (15–50A)	**HKD, CHKD** GHB (15–50A)	**KDC** GHB (15–50A)	**LCL** GHB

Notes

① Not valid with FDE.
② Not valid with HFDE.

480 Vac—Breaker/Breaker Series Ratings

Main devices are shown at top in shaded area. Respective branch devices shown directly below.
All ratings in this table apply to two- and three-pole branch breakers only. Not valid for single-pole branch breakers.

Main Breaker Maximum Amperes	Series Equipment Rating—kA Symmetrical 25	35	65	100		150
100				**FB-P**		**FCL**
				EHD FDB FD HFD		EHD FDB FD, FDE HFD, HFDE
200				**LA-P**		
				EHD FDB FD HFD JD, JDB HJD		
225		**FD, FDE**	**HFD, HFDE**	**FDC**		
		EHD FDB	EHD FDB FD, FDE EGS ①	EHD, EGS, EGH FDB FD, FDE HFD, HFDE		
250	**JD, JDB**		**HJD**	**JDC**		**LCL**
	EHD FDB		EHD FDB FD, FDE JD, JDB, EGS	EHD, EGS, EGH FDB FD, FDE HFD, HFDE JD, JDB HJD		FDE, HFDE
400		**KD, KDB**	**HKD**	**KDC**	**LA-P**	**LCL**
		EHD FDB	EHD FDB FD, FDE JD, JDB KD, KDB, EGS	EHD, EGS, EGH FDB FD, FDE HFD, HFDE JD, JDB HJD KD, KDB HKD	JD, JDB HJD KD, KDB HKD	EHD FDB FD, FDE HFD, HFDE FDC JD, JDB HJD KD, KDB HKD
500				**NB-P**		
				JD, JDB HJD KD, KDB HKD		
600		**LD, LDB** **CLD**	**HLD, HLDB** **CHLD**			
		JD, JDB	FD, FDE JD, JDB KD, KDB LD, LDB			

Note

① Not valid with HFDE.

600 Vac—Breaker/Breaker Series Ratings

Main fuse class shown at top in shaded area. Respective branch devices shown directly below.
All ratings in this table apply to two- and three-pole branch breakers only. Not valid for single-pole branch breakers.

Main Breaker Maximum Amperes	Series Equipment Rating—kA Symmetrical 18	25	35	42	50	100
225	**FD**	**HFD**	**FDC**			
	FDB	FDB FD, FDE	FDB FD, FDE HFD, HFDE			
250	**JD, JDB**	**HJD**	**JDC**			**LCL**
	FDB	FDB FD, FDE JD, JDB	FDB FD, FDE HFD, HFDE JD, JDB HJD			FDE, HFDE
400		**KD, KDB** **CKD**	**HKD, CHKD**	**KDC**	**KDC**	**LCL**
		FDB FD, FDE JD, JDB	FDB FD, FDE HFD, HFDE JD, JDB HJD	FDB FD, FDE HFD, HFDE	JD, JDB HJD KD, KDB HKD	FDB FD, FDE HFD, HFDE FDC JD, JDB HJD JDC KD, KDB HKD KDC
600		**LD, LDB** **CLD**	**HLD, HLDB** **CHLD**			
		FD, FDE JD, JDB	KD, KDB LD, LDB			

120/240 Vac—Fuse/Breaker Series Ratings

Main fuse class shown at top in shaded area. Respective branch devices shown directly below.

Main Fuse Maximum Amperes	Series Equipment Rating—kA Symmetrical 100			200		
100						**R**
						BA, BAB HQP QBHW QPHW GB GHB
200			**R**	**J**	**T**	
			GB GHB	BA, BAB HQP QBHW QPHW	BA, BAB HQP QBHW QPHW	
400	**J**	**T**		**J**	**T**	
	BA, BAB HQP QBHW QPHW	BA, BAB HQP QBHW QPHW		GB GHB	GB GHB	

240 Vac—Fuse/Breaker Series Ratings

For single-pole and two-pole 120/240 volt rated breakers (BA, BAB, HQP, QBHW, QPHW), see **Page V2-T3-23**.
Main fuse class shown at top in shaded area. Respective branch devices shown directly below.

Main Fuse Maximum Amperes	Series Equipment Rating—kA Symmetrical 100			200		
100						**R** BAB_H HQP_H QBHW_H QPHW_H GB GHB
200			**R** GB GHB	**J** BAB_H HQP_H QBHW_H QPHW_H	**T** BAB_H HQP_H QBHW_H QPHW_H	**R** GB ① GHB ①
400	**J** BAB_H HQP_H QBHW_H QPHW_H	**T** BAB_H HQP_H QBHW_H QPHW_H		**J** GB GHB	**T** GB GHB	
600			**L** EHD FDB FD, FDE ED JD, JDB DK, KD, KDB			

277—Vac Fuse/Breaker Series Ratings

Main fuse class are shown at top in shaded area. Respective branch devices shown directly below.
All ratings in this table apply to single-pole branch breakers only. For two- and three-pole branch breakers, consult other tables.

Main Fuse Maximum Amperes	Series Equipment Rating—kA Symmetrical 65		100			200	
100			**J** GHBS GHQ GHQRSP	**T** GHBS GHQ GHQRSP		**R** GHB	
200	**J** GHBS GHQ GHQRSP	**T** GHBS GHQ GHQRSP	**J** EHD FD HFD	**T** EHD FD HFD	**R** GHB		
400						**J** GHB	**T** GHB

Note

① Valid on two- and three-pole breakers only. Not valid for single-pole.

480Y/277 Vac—Fuse/Breaker Series Ratings

Main fuse class shown at top in shaded area. Respective branch devices shown directly below. All ratings in this table apply to two- and three-pole branch breakers only. Not valid for single-pole branch breakers.

Main Fuse Maximum Amperes	Series Equipment Rating—kA Symmetrical						
	65		100		200		
100			**J**	**T**			**R**
			GHBS	GHBS			GHB
200	**J**	**T**		**R**			
	GHBS	GHBS		GHB			
400					**J**	**T**	
					GHB	GHB	
600			**J**	**T**			
			EHD FD, FDE HFD FDC HFDE	GHB EHD FD, FDE HFD, HFDE FDC JD HJD JDC			

600 Vac—Fuse/Breaker Series Ratings

Main fuse class shown at top in shaded area. Respective branch devices shown directly below. All ratings in this table apply to two- and three-pole branch breakers only. Not valid for single-pole branch breakers.

Main Fuse Maximum Amperes	Series Equipment Rating—kA Symmetrical				
	100			200	
100			**R**		
			FD, FDE HFD, HFDE FDC		
200	**J**	**T**	**R**		
	FD, FDE HFD, HFDE FDC	FD, FDE HFD, HFDE FDC	JD HJD JDC		
400	**J**	**T**	**R**		
	JD HJD JDC	JD HJD JDC	KD HKD KDC		
600				**J**	**T**
				KD HKD KDC	KD HKD KDC

480 Vac—Fuse/Breaker Series Ratings

Main fuse class shown at top in shaded area. Respective branch devices shown directly below. All ratings in this table apply to two- and three-pole branch breakers only. Not valid for single-pole branch breakers.

Main Fuse Maximum Amperes	Series Equipment Rating—kA Symmetrical			
	100		200	
100			**R**	
			EHD	
200	**J**	**T**		
	EHD FD HFD FDC	EHD FD HFD FDC		

Triple Series Ratings

Main Fuse Class and Maximum Amperes	Tenant Main Type	Branch Type	System Voltage	Short-Circuit Series Rating (kA, Sym.)
L-6000	DK, KD, KDB	GB, GHB, EHD ①	240	100
L-6000	DK, KD, KDB	GB, GHB	120/240	100
L-6000	DK, KD, KDB	FD ①, FDB	240	100
L-6000	DK, KD, KDB	JD, JDB	240	100
L-6000	JD, JDB	GB, GHB	240	100
L-6000	JD, JDB	GB, GHB	120/240	100
L-6000	FD	GB, GHB	240	100
L-6000	FD	GB, GHB	120/240	100
L-6000	FD, FDB	BAB_H, HQP_H QBHW_H, QPHW_H	240	100
L-6000	FD, FDB	BA, BAB HQP (15–70A)	120/240	100
L-6000	EHD	BAB_H, HQP_H	240	100
L-6000	EHD	BA, BAB, HQP	120/240	100

Note

① Valid on two- and three-pole breakers only. Not valid for single-pole.

Type PRL1a

Contents

Description	*Page*
Product Description	**V2-T3-7**
Application Description	**V2-T3-8**
Standards and Certifications	**V2-T3-10**
Technical Data and Specifications	**V2-T3-11**
Type PRL1a	
Product Selection	**V2-T3-27**
Box Sizing and Selection	**V2-T3-28**
Type PRL1aF	**V2-T3-30**
Type PRL1a-LX	**V2-T3-34**
Type PRL2a	**V2-T3-38**
Type PRL2aF	**V2-T3-42**
Type PRL2a-LX	**V2-T3-46**
Retrofit Panelboard	**V2-T3-50**
Type PRL3a	**V2-T3-58**
Type PRL4	**V2-T3-66**
Type PRL4D	**V2-T3-76**
Type PRL5P	**V2-T3-86**

Type PRL1a

Product Description

- 240 Vac maximum
- Three-phase four-wire, three-phase three-wire, single-phase three-wire, single-phase two-wire
- 400A maximum mains
- 100A maximum branch breakers
- Bolt-on or plug-on branch breakers
- Each branch connector is capable of up to a total of 140A maximum by breaker ampere rating
- Factory assembled
- Refer to **Page V2-T3-7** for additional information

Application Description

- Lighting branch panelboard
- Fully rated or series rated
- Interrupting ratings up to 200 kA symmetrical
- Suitable for use as Service Entrance Equipment, when specified on the order
- See **Pages V2-T3-7** through **V2-T3-23** for additional information

Standards and Certifications

- UL 67, UL 50
- Federal Specification W-P-115c
- Refer to **Page V2-T3-7** for additional information

Listed

Product Selection

Type PRL1a

PRL1a

Ampere Rating	Interrupting Rating (kA Sym.) 240 Vac	Breaker Type
Main Lug Only		
100	—	—
225	—	—
400	—	—
600	—	—
Main Breaker		
100	10	BAB
100	18	EHD
100	22	QBHW
100	22	EDB
100	42	EDS
100	65	ED
100	65	FD, FDE
100	100	EDH
100	100	HFD, HFDE
225	22	EDB
225	42	EDS
225	65	ED
225	100	EDH
250	65	JD
250	100	HJD
250	200	JDC
400	65	DK
400	65	KD
400	100	HKD
400	100	LHH
400	200	KDC
600	65	LGE
600	85	LGS
600	100	LGH
600	200	LGC
600	200	LGU

PRL1a Branch Circuit Breakers

Bolt-on = BAB, QBHW, QBGF, QBHGF, QBGFEP, QBHGFEP, QBAF, QBAG, QBHAF, QBHAG
Plug-on = HQP, QPHW, QPGF, QPHGF, QPGFEP, QPHGFEP

Ampere Rating	Interrupting Rating (kA Sym.) 240 Vac ①	Breaker Type
15–60	10	BAB, HQP
70	10	BAB, HQP
80–100	10	BAB, HQP
15–50 ②	10	QBGF, QPGF ③
15–50 ②	10	QBGFEP, QPGFEP ④
15–20	10	QBCAF ⑤
15–60	10	BAB-D, HQP-D ⑥
15–30	10	BAB-C, HQP-B ⑦
15–30	10	BABRP ⑧
15–30	10	BABRSP ⑧
15–60	22	QBHW, QPHW
70	22	QBHW, QPHW
80–100	22	QBHW, QPHW
15–30	22	QBHGF, QPHGF ③
15–30	22	QBHGFEP, QPHGFEP ④
15–20	22	QBHCAF ⑤
Provision	—	—

Notes

① Single-pole breakers are rated 120 Vac maximum.
② 50A devices are available as two-pole only.
③ GFCI for 5 mA personnel protection.
④ GFP for 30 mA equipment protection.
⑤ Arc fault circuit breaker.
⑥ HID (High Intensity Discharge) rated breaker.
⑦ Switching Neutral Breaker. single-pole device requires two-pole space, two-pole device requires three-pole space.
⑧ Solenoid operated breaker.

Box Sizing and Selection

Approximate Dimensions in Inches (mm)

Assembled Circuit Breaker Panelboards and Lighting Controls

Box size and box and trim catalog numbers for all standard panelboard types are found on **Page V2-T3-29**.

Instructions

1. Using description of the required panelboard, select the rating and type of main required.
2. Count the total number of branch circuit poles, including provisions, required in the panelboard. Do not count main breaker poles. Convert two- or three-pole branch breaker to single-poles, i.e., three-pole breaker, count as three poles. Determine sub-feed breaker or through-feed lug requirements.
3. Select the main ampere rating section from table on **Page V2-T3-29**.
4. Select panelboard type from first column, main breaker frame, if applicable, from second column, and sub-feed breaker frame, if applicable, from the third column.
5. From Step #2, determine the number of branch circuits in Column 4.
6. Read box size, box and trim catalog numbers across columns to the right. Specify surface or flush mounting on the order.

Cabinets

Fronts are code-gauge steel, ANSI-61 light gray painted finish.

Boxes are code-gauge galvanized steel without knockouts. Standard depth is 5-3/4 inches (146.1 mm). Standard width is 20 inches (508.0 mm). An optional 28-inch (711.2 mm) wide box is available.

Top and Bottom Gutters

5-1/2 inches (139.7 mm) minimum.

Approximate Dimensions in Inches (mm)

PRL1a Panelboard Sizing

Panelboard Types	Main Breaker Types and Mounting Position (H) = Horizontal (V) = Vertical	Sub-Feed Breaker Types and Mounting Position (H) = Horizontal (V) = Vertical	Maximum No. of Branch Circuits Including Provisions	Box Dimensions ① Height	Width	Depth	YS Box Catalog Number	LT Trim Catalog Number	EZ Box Catalog Number	EZ Trim Catalog Number
100 A										
Main breaker	BAB, QBHW (H)	—	15	36.00 (914.4)	20.00 (508.0)	5.75 (146.1)	**YS2036**	**LT2036S or F**	**EZB2036R**	**EZT2036S or F**
		—	27	48.00 (1219.2)	20.00 (508.0)	5.75 (146.1)	**YS2048**	**LT2048S or F**	**EZB2048R**	**EZT2048S or F**
		—	39	48.00 (1219.2)	20.00 (508.0)	5.75 (146.1)	**YS2048**	**LT2048S or F**	**EZB2048R**	**EZT2048S or F**
		—	42	60.00 (1524.0)	20.00 (508.0)	5.75 (146.1)	**YS2060**	**LT2060S or F**	**EZB2060R**	**EZT2060S or F**
Main lugs or main breaker	EHD FD, HFD (V)	—	18	36.00 (914.4)	20.00 (508.0)	5.75 (146.1)	**YS2036**	**LT2036S or F**	**EZB2036R**	**EZT2036S or F**
		—	30	48.00 (1219.2)	20.00 (508.0)	5.75 (146.1)	**YS2048**	**LT2048S or F**	**EZB2048R**	**EZT2048S or F**
		—	42	48.00 (1219.2)	20.00 (508.0)	5.75 (146.1)	**YS2048**	**LT2048S or F**	**EZB2048R**	**EZT2048S or F**
Main lugs or main breaker with 100 A through-feed lugs or sub-feed breaker	EHD FD HFD (V)	EHD FD HFD (V)	18	48.00 (1219.2)	20.00 (508.0)	5.75 (146.1)	**YS2048**	**LT2048S or F**	**EZB2048R**	**EZT2048S or F**
			30	48.00 (1219.2)	20.00 (508.0)	5.75 (146.1)	**YS2048**	**LT2048S or F**	**EZB2048R**	**EZT2048S or F**
			42	60.00 (1524.0)	20.00 (508.0)	5.75 (146.1)	**YS2060**	**LT2060S or F**	**EZB2060R**	**EZT2060S or F**
225 A										
Main lugs or main breaker	EDB, EDS, ED, EDH, FD, HFD (V)	—	18	36.00 (914.4)	20.00 (508.0)	5.75 (146.1)	**YS2036**	**LT2036S or F**	**EZB2036R**	**EZT2036S or F**
		—	30	48.00 (1219.2)	20.00 (508.0)	5.75 (146.1)	**YS2048**	**LT2048S or F**	**EZB2048R**	**EZT2048S or F**
		—	42	48.00 (1219.2)	20.00 (508.0)	5.75 (146.1)	**YS2048**	**LT2048S or F**	**EZB2048R**	**EZT2048S or F**
Main lugs or main breaker with 225 A throughfeed lugs or sub-feed breaker	FD, HFD, EDS, ED, EDH (V)	FD, HFD, EDS, ED, EDH (V)	18	48.00 (1219.2)	20.00 (508.0)	5.75 (146.1)	**YS2048**	**LT2048S or F**	**EZB2048R**	**EZT2048S or F**
			30	60.00 (1524.0)	20.00 (508.0)	5.75 (146.1)	**YS2060**	**LT2060S or F**	**EZB2060R**	**EZT2060S or F**
			42	60.00 (1524.0)	20.00 (508.0)	5.75 (146.1)	**YS2060**	**LT2060S or F**	**EZB2060R**	**EZT2060S or F**
400 A										
Main breaker	DK, KD, HKD, KDC, LHH (V)	—	18	48.00 (1219.2)	20.00 (508.0)	5.75 (146.1)	**YS2048**	**LT2048S or F**	**EZB2048R**	**EZT2048S or F**
		—	30	60.00 (1524.0)	20.00 (508.0)	5.75 (146.1)	**YS2060**	**LT2060S or F**	**EZB2060R**	**EZT2060S or F**
		—	42	60.00 (1524.0)	20.00 (508.0)	5.75 (146.1)	**YS2060**	**LT2060S or F**	**EZB2060R**	**EZT2060S or F**
Main lugs or main breaker with 225 A through-feed lugs or sub-feed breaker	DK, KD, HKD, KDC, LHH (V)	FD, HFD, EDS, ED, EDH (V)	18	60.00 (1524.0)	20.00 (508.0)	5.75 (146.1)	**YS2060**	**LT2060S or F**	**EZB2060R**	**EZT2060S or F**
			30	60.00 (1524.0)	20.00 (508.0)	5.75 (146.1)	**YS2060**	**LT2060S or F**	**EZB2060R**	**EZT2060S or F**
			42	72.00 (1828.8)	20.00 (508.0)	5.75 (146.1)	**YS2072**	**LT2072S or F**	**EZB2072R**	**EZT2072S or F**
Main breaker with 400 A through-feed lugs or sub-feed breaker	DK, KD, HKD, KDC, LHH (V)	DK, KD, HKD, KDC (V)	18	72.00 (1828.8)	20.00 (508.0)	5.75 (146.1)	**YS2072**	**LT2072S or F**	**EZB2072R**	**EZT2072S or F**
			30	72.00 (1828.8)	20.00 (508.0)	5.75 (146.1)	**YS2072**	**LT2072S or F**	**EZB2072R**	**EZT2072S or F**
			42	90.00 (2286.0)	20.00 (508.0)	5.75 (146.1)	**YS2090**	**LT2090S or F**	**EZB2090R**	**EZT2090S or F**
600 A										
Main breaker	LGE, LGS, LGH, LGC, LGU (V)	—	18	60.00 (1524.0)	20.00 (508.0)	5.75 (146.1)	**YS2060**	**LT2060S or F**	**EZB2060R**	**EZT2060S or F**
		—	30	60.00 (1524.0)	20.00 (508.0)	5.75 (146.1)	**YS2060**	**LT2060S or F**	**EZB2060R**	**EZT2060S or F**
		—	42	72.00 (1828.8)	20.00 (508.0)	5.75 (146.1)	**YS2072**	**LT2072S or F**	**EZB2072R**	**EZT2072S or F**
Main lugs or main breaker with 225 A through-feed lugs or sub-feed breaker	LGE, LGS, LGH, LGC, LGU (V)	FD, HFD, EDS, ED, EDH (V)	18	72.00 (1828.8)	20.00 (508.0)	5.75 (146.1)	**YS2072**	**LT2072S or F**	**EZB2072R**	**EZT2072S or F**
			30	72.00 (1828.8)	20.00 (508.0)	5.75 (146.1)	**YS2072**	**LT2072S or F**	**EZB2072R**	**EZT2072S or F**
			42	90.00 (2286.0)	20.00 (508.0)	5.75 (146.1)	**YS2090**	**LT2090S or F**	**EZB2090R**	**EZT2090S or F**
Main breaker with 400 A through-feed lugs or sub-feed breaker	LGE, LGS, LGH, LGC, LGU (V)	DK, KD, HKD, KDC (V)	18	72.00 (1828.8)	20.00 (508.0)	5.75 (146.1)	**YS2072**	**LT2072S or F**	**EZB2072R**	**EZT2072S or F**
			30	90.00 (2286.0)	20.00 (508.0)	5.75 (146.1)	**YS2090**	**LT2090S or F**	**EZB2090R**	**EZT2090S or F**
			42	90.00 (2286.0)	20.00 (508.0)	5.75 (146.1)	**YS2090**	**LT2090S or F**	**EZB2090R**	**EZT2090S or F**
Main breaker with 600 A through-feed lugs or sub-feed breaker	LGE, LGS, LGH, LGC, LGU (V)	LGE, LGS, LGH, LGC (V)	18	72.00 (1828.8)	20.00 (508.0)	5.75 (146.1)	**YS2072**	**LT2072S or F**	**EZB2072R**	**EZT2072S or F**
			30	90.00 (2286.0)	20.00 (508.0)	5.75 (146.1)	**YS2090**	**LT2090S or F**	**EZB2090R**	**EZT2090S or F**
			42	90.00 (2286.0)	20.00 (508.0)	5.75 (146.1)	**YS2090**	**LT2090S or F**	**EZB2090R**	**EZT2090S or F**

Note

① Smaller panelboard box sizes are available if required. Contact Eaton for application information.

Type PRL1aF

Contents

Description	*Page*
Product Description	**V2-T3-7**
Application Description	**V2-T3-8**
Standards and Certifications	**V2-T3-10**
Technical Data and Specifications	**V2-T3-11**
Type PRL1a	**V2-T3-26**
Type PRL1aF	
Product Selection	**V2-T3-31**
Box Sizing and Selection	**V2-T3-32**
Type PRL1a-LX	**V2-T3-34**
Type PRL2a	**V2-T3-38**
Type PRL2aF	**V2-T3-42**
Type PRL2a-LX	**V2-T3-46**
Retrofit Panelboard	**V2-T3-50**
Type PRL3a	**V2-T3-58**
Type PRL3E	**V2-T3-62**
Type PRL4	**V2-T3-66**
Type PRL4D	**V2-T3-76**
Type PRL5P	**V2-T3-86**

Type PRL1aF

Product Description

- 240 Vac maximum
- 400A maximum mains
- Three-phase four-wire, single-phase three-wire
- 30A maximum branch devices
- Factory assembled

Application Description

- Lighting branch panelboards
- Instrument protection
- Fully rated
- Interrupting ratings up to 200 kA symmetrical when protected by fuse

Standards and Certifications

- UL 67, UL 50

Listed

Product Selection

Type PRL1aF

PRL1aF

Ampere Rating	Interrupting Rating (kA Sym.) 240 Vac	Breaker Type
Main Lug Only		
100	—	—
225	—	—
400	—	—
Main Breaker		
100	18	EHD
100	22	EDB
100	42	EDS
100	65	ED
100	65	FD
100	65	FDE
100	100	EDH
100	100	HFD
100	100	HFDE
225	22	EDB
225	42	EDS
225	65	ED
225	65	FD
225	65	FDE
225	100	EDH
225	100	HFD
225	100	HFDE
400	42	DK
400	65	KD
400	100	HKD
400	200	KDC
400	200	LHH

PRL1aF—Branch Overcurrent Devices

Hybrid breaker/fuse (Class CC) branch device

Ampere Rating	Interrupting Rating	Breaker Type
30	200	Hybrid

Box Sizing and Selection

Approximate Dimensions in Inches (mm)

Assembled Circuit Breaker Panelboards

Box size and box and trim catalog numbers for all standard panelboard types are found on **Page V2-T3-33**.

Instructions

1. Using description of the required panelboard, select the rating and type of main required.
2. Count the total number of branch circuit poles, including provisions, required in the panelboard. Determine through-feed lug requirements.
3. Select the main ampere rating section from table on **Page V2-T3-33**.
4. Select panelboard type from first column, main breaker frame.
5. From Step #2, determine the number of branch circuits in Column 4.
6. Read box size, box and trim catalog numbers across columns to the right. Specify surface or flush mounting on the order.

Cabinets

Fronts are code-gauge steel, ANSI-61 light gray painted finish.

Boxes are code-gauge galvanized steel without knockouts. Standard depth is 5-3/4 inches (146.1 mm). Standard width is 20 inches (508.0 mm). An optional 28-inch (711.2 mm) wide box is available.

Top and Bottom Gutters

5-1/2 inches (139.7 mm) minimum.

Approximate Dimensions in Inches (mm)

PRL1aF Panelboard Sizing

Panelboard Types	Main Breaker Types and Mounting Position (H) = Horizontal (V) = Vertical	Maximum No. of Branch Circuits Including Provisions	Box Dimensions ① Height	Width	Depth	YS Box Catalog Number	LT Trim Catalog Number	EZ Box Catalog Number	EZ Trim Catalog Number
100A									
Main lugs or main breaker	EHD FD, HFD FDE, HFDE (V)	18	36.00 (914.4)	20.00 (508.0)	5.75 (146.1)	**YS2036**	**LT2036S or F**	**EZB2036R**	**EZT2036S or F**
		30	48.00 (1219.2)	20.00 (508.0)	5.75 (146.1)	**YS2048**	**LT2048S or F**	**EZB2048R**	**EZT2048S or F**
		42	48.00 (1219.2)	20.00 (508.0)	5.75 (146.1)	**YS2048**	**LT2048S or F**	**EZB2048R**	**EZT2048S or F**
Main lugs or main breaker with 100A through-feed lugs	EHD FD, FDE HFD, HFDE (V)	18	48.00 (1219.2)	20.00 (508.0)	5.75 (146.1)	**YS2048**	**LT2048S or F**	**EZB2048R**	**EZT2048S or F**
		30	48.00 (1219.2)	20.00 (508.0)	5.75 (146.1)	**YS2048**	**LT2048S or F**	**EZB2048R**	**EZT2048S or F**
		42	60.00 (1524.0)	20.00 (508.0)	5.75 (146.1)	**YS2060**	**LT2060S or F**	**EZB2060R**	**EZT2060S or F**
225A									
Main lugs or main breaker	EDB, EDS, ED, EDH, FD, HFD FDE, HFDE (V)	18	36.00 (914.4)	20.00 (508.0)	5.75 (146.1)	**YS2036**	**LT2036S or F**	**EZB2036R**	**EZT2036S or F**
		30	48.00 (1219.2)	20.00 (508.0)	5.75 (146.1)	**YS2048**	**LT2048S or F**	**EZB2048R**	**EZT2048S or F**
		42	48.00 (1219.2)	20.00 (508.0)	5.75 (146.1)	**YS2048**	**LT2048S or F**	**EZB2048R**	**EZT2048S or F**
Main lugs or main breaker with 225A through-feed lugs	FD, HFD, EDS, ED, EDH, FDE, HFDE (V)	18	48.00 (1219.2)	20.00 (508.0)	5.75 (146.1)	**YS2048**	**LT2048S or F**	**EZB2048R**	**EZT2048S or F**
		30	60.00 (1524.0)	20.00 (508.0)	5.75 (146.1)	**YS2060**	**LT2060S or F**	**EZB2060R**	**EZT2060S or F**
		42	60.00 (1524.0)	20.00 (508.0)	5.75 (146.1)	**YS2060**	**LT2060S or F**	**EZB2060R**	**EZT2060S or F**
400A									
Main breaker	DK, KD, HKD, KDC, LHH (V)	18	48.00 (1219.2)	20.00 (508.0)	5.75 (146.1)	**YS2048**	**LT2048S or F**	**EZB2048R**	**EZT2048S or F**
		30	60.00 (1524.0)	20.00 (508.0)	5.75 (146.1)	**YS2060**	**LT2060S or F**	**EZB2060R**	**EZT2060S or F**
		42	60.00 (1524.0)	20.00 (508.0)	5.75 (146.1)	**YS2060**	**LT2060S or F**	**EZB2060R**	**EZT2060S or F**
Main lugs or main breaker with 225A through-feed lugs	DK, KD, HKD, KDC, LHH (V)	18	60.00 (1524.0)	20.00 (508.0)	5.75 (146.1)	**YS2060**	**LT2060S or F**	**EZB2060R**	**EZT2060S or F**
		30	60.00 (1524.0)	20.00 (508.0)	5.75 (146.1)	**YS2060**	**LT2060S or F**	**EZB2060R**	**EZT2060S or F**
		42	72.00 (1828.8)	20.00 (508.0)	5.75 (146.1)	**YS2072**	**LT2072S or F**	**EZB2072R**	**EZT2072S or F**
Main breaker with 400A through-feed lugs	DK, KD, HKD, KDC, LHH (V)	18	72.00 (1828.8)	20.00 (508.0)	5.75 (146.1)	**YS2072**	**LT2072S or F**	**EZB2072R**	**EZT2072S or F**
		30	72.00 (1828.8)	20.00 (508.0)	5.75 (146.1)	**YS2072**	**LT2072S or F**	**EZB2072R**	**EZT2072S or F**
		42	90.00 (2286.0)	20.00 (508.0)	5.75 (146.1)	**YS2090**	**LT2090S or F**	**EZB2090R**	**EZT2090S or F**

Note

① Smaller panelboard box sizes are available if required. Contact Eaton for application information.

Type PRL1a-LX, Column Type

Contents

Description	*Page*
Product Description	**V2-T3-7**
Application Description	**V2-T3-8**
Standards and Certifications	**V2-T3-10**
Technical Data and Specifications	**V2-T3-11**
Type PRL1a	**V2-T3-26**
Type PRL1aF	**V2-T3-30**
Type PRL1a-LX	
Product Selection	**V2-T3-35**
Box Sizing and Selection	**V2-T3-36**
Type PRL2a	**V2-T3-38**
Type PRL2aF	**V2-T3-42**
Type PRL2a-LX	**V2-T3-46**
Retrofit Panelboard	**V2-T3-50**
Type PRL3a	**V2-T3-58**
Type PRL3E	**V2-T3-62**
Type PRL4	**V2-T3-66**
Type PRL4D	**V2-T3-76**
Type PRL5P	**V2-T3-86**

Type PRL1a-LX

Product Description

- 240 Vac maximum
- Three-phase four-wire, three-phase three-wire, single-phase three-wire, single-phase two-wire
- 225A maximum mains
- 100A maximum branch breakers
- Bolt-on branch breakers
- Factory assembled
- Refer to **Page V2-T3-7** for additional information

Application Description

- Lighting branch panelboard
- Column mounting width
- Fully rated or series rated
- Interrupting ratings up to 200 kA symmetrical
- See **Pages V2-T3-7** through **V2-T3-23** for additional information

Standards and Certifications

- UL 67, UL 50
- Federal Specification W-P-115c
- Refer to **Page V2-T3-7** for additional information

Listed

Product Selection

Type PRL1a-LX

PRL1a-LX

Ampere Rating	Interrupting Rating (kA Sym.) 240 Vac	Breaker Type
Main Lug Only		
100	—	—
225	—	—
Main Breaker		
100	10	BAB
100	18	EHD
100	22	QBHW
100	22	EDB
100	42	EDS
100	65	ED
100	65	FD
100	100	EDH
100	100	HFD
255	22	EDB
255	42	EDS
225	65	ED
225	100	EDH

Branch Circuit Breakers—PRL1a-LX ①

Ampere Rating	Interrupting Rating (kA Sym.) 240 Vac ②	Breaker Type
15–60	10	BAB
70	10	BAB
80–100	10	BAB
15–50 ③	10	QBGF ④
15–50 ③	10	QBGFEP ⑤
15–20	10	QBCAF ⑥
15–30	10	BABRP ⑦
15–30	10	BABRSP ⑦
15–60	22	QBHW
70	22	QBHW
80–100	22	QBHW
15–30	22	QBHGF ④
15–30	22	QBHGFEP ⑤
15–20	22	QBHCAF ⑥
Provision	—	—

Pull Box With Extension Trough

Includes pull box with trough extension. For additional trough extensions, refer to table below.

Description	Catalog Number
Pullbox with 36-inch trough	**XCTXB036**
Pullbox with 48-inch trough	**XCTXB048**
Pullbox with 60-inch trough	**XCTXB060**
Pullbox with 72-inch trough	**XCTXB072**
Pullbox with 84-inch trough	**XCTXB084**

Neutral Bars

When Column Type panels are furnished with trough extensions and pull box, the neutral bar will be placed in the pull box unless otherwise specified.

When troughs and pull box are not furnished, the neutral bar will be located on the panel at the same end as the main.

Additional Trough Extensions

Width and depth are the same as the panelboard.

Length Inches (mm)	Catalog Number
36.00 (914.4)	**CTXB036**
48.00 (1219.2)	**CTXB048**
60.00 (1524.0)	**CTXB060**
72.00 (1828.8)	**CTXB072**
84.00 (2133.6)	**CTXB084**

Notes

① 240V breakers must be used on three-phase, three-wire, 240V delta systems or on the high leg of a midpoint delta grounded system.
② Single-pole breakers are rated 120 Vac maximum.
③ 50A devices are available as two-pole only.
④ GFCI for 5 mA personnel protection.
⑤ GFP for 30 mA equipment protection.
⑥ Arc fault circuit breaker.
⑦ Solenoid operated breaker.

Box Sizing and Selection

Approximate Dimensions in Inches (mm)

Assembled Circuit Breaker Panelboards

Box size, box and trim catalog numbers for standard Column Type panelboards listed are available from tables on **Page V2-T3-37**.

Instructions

1. Using description of the required panelboard, select the rating and type of main required.
   a. 100A panelboards—**Page V2-T3-37**.
   b. 225A panelboards—**Page V2-T3-37**.
2. Count the total number of branch circuit poles, including provisions, required in the panelboard. Do not count main breaker poles. Convert two- or three-pole branch breaker to single poles, i.e., three-pole breaker, count as three poles. Determine sub-feed breaker or through-feed lug requirements.
3. Select the panelboard main ampere rating from tables on **Page V2-T3-37**.
4. Panelboard Type from first column, main breaker Frame and Designation, if applicable from second column, and sub-feed breaker Frame and Designation, if applicable, from the third column.
5. From Step #2, determine the number of branch circuits in Column 4.
6. Read box size, box and trim catalog numbers across columns to the right. All panels are surface mounted.

Cabinets

Boxes and trims are code-gauge steel, ANSI-61 light gray painted finish.

Boxes are furnished without knockouts. Standard depth is 6.00 inches (152.4 mm). Standard width is 8.63 inches (219.1 mm).

Top and Bottom Gutters

4.50 inches (114.3 mm) minimum.

Left Side Gutter

4.38 inches (111.2 mm) minimum.

Pull Box

Pull box is furnished without knockouts. Standard dimensions:

Pull Box Dimensions

Height	Width	Depth
12.00 (304.8)	16.00 (406.4)	6.00 (152.4)

PRL1a-LX Trough Extension

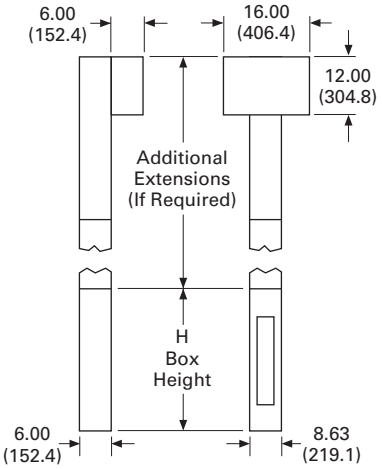

Trough Extension

When extension troughs are used, Section 376 of the National Electrical Code, reading as follows, should be observed: 376. Number of Conductors. Wireways shall not contain more than 30 conductors at any cross section, unless the conductors are for signal circuits or are control conductors between a motor and its starter and used only for starting duty. The sum of the cross-sectional areas of all contained conductors at any cross section of a wireway shall not exceed 20% of the interior cross-sectional area of the wireway.

Approximate Dimensions in Inches (mm)

100A Maximum PRL1a-LX Column Type Panelboard Sizing

Panelboard Types	Main Breaker Types Mounting: (H) = Horizontal (V) = Vertical	Sub-Feed Breaker Types Vertical Mounting	Maximum Number of Branch Circuits Including Provisions	Box Dimensions Height	Width	Depth	Box Catalog Number	Trim Catalog Number ①
Main breaker	BAB, QBHW (H)	—	27	69.00 (1752.6)	8.63 (219.2)	6.00 (152.4)	**YSC969**	**LTC969S**
		—	39	81.00 (2057.4)	8.63 (219.2)	6.00 (152.4)	**YSC981**	**LTC981S**
Main lugs or main breaker	EHD, EDB, EDS, ED, FD, HFD (V)	—	30	69.00 (1752.6)	8.63 (219.2)	6.00 (152.4)	**YSC969**	**LTC969S**
		—	42	81.00 (2057.4)	8.63 (219.2)	6.00 (152.4)	**YSC981**	**LTC981S**
Main lugs or main breaker with 100A through-feed lugs or sub-feed breaker	EHD, EDB, EDS, ED, FD, HFD (V)	EHD, FD, HFD	30	78.00 (1981.2)	8.63 (219.2)	6.00 (152.4)	**YSC978**	**LTC978S**
			42	90.00 (2286.0)	8.63 (219.2)	6.00 (152.4)	**YSC990**	**LTC990S**

225A Maximum PRL1a-LX Column Type Panelboard Sizing

Panelboard Types	Main Breaker Types Vertical Mounting	Sub-Feed Breaker Types	Maximum Number of Branch Circuits Including Provisions	Box Dimensions Inches Height	Width	Depth	Box Catalog Number	Trim Catalog Number ①
Main lugs or main breaker	EDB, EDS, ED, EDH	—	30	69.00 (1752.6)	8.63 (219.2)	6.00 (152.4)	**YSC969**	**LTC969S**
		—	42	81.00 (2057.4)	8.63 (219.2)	6.00 (152.4)	**YSC981**	**LTC981S**
Main lugs or main breaker with 225A through-feed lugs or sub-feed breaker	EDB, EDS, ED, EDH	EHD, FD, HFD, EDB, EDS, ED, EDH	30	78.00 (1981.2)	8.63 (219.2)	6.00 (152.4)	**YSC978**	**LTC978S**
			42	90.00 (2286.0)	8.63 (219.2)	6.00 (152.4)	**YSC990**	**LTC990S**

Note

① Add suffix B to trim catalog number for bottom fed panelboards (i.e., LTC969SB).

Type PRL2a

Contents

Description	*Page*
Product Description	**V2-T3-7**
Application Description	**V2-T3-8**
Standards and Certifications	**V2-T3-10**
Technical Data and Specifications	**V2-T3-11**
Type PRL1a	**V2-T3-26**
Type PRL1aF	**V2-T3-30**
Type PRL1a-LX	**V2-T3-34**
Type PRL2a	
Product Selection	**V2-T3-39**
Box Sizing and Selection	**V2-T3-40**
Type PRL2aF	**V2-T3-42**
Type PRL2a-LX	**V2-T3-46**
Retrofit Panelboard	**V2-T3-50**
Type PRL3a	**V2-T3-58**
Type PRL3E	**V2-T3-62**
Type PRL4	**V2-T3-66**
Type PRL4D	**V2-T3-76**
Type PRL5P	**V2-T3-86**

Type PRL2a

Product Description

- 480Y/277 Vac maximum (125 Vdc)
- Three-phase four-wire, three-phase three-wire, single-phase three-wire, single-phase two-wire
- 600 A maximum mains
- 100 A maximum branch breakers
- Bolt-on branch breakers
- Each branch connector is capable of up to a total of 140 A maximum by breaker ampere rating
- Factory assembled
- Refer to **Page V2-T3-7** for additional information

Application Description

- Lighting branch panelboard
- Fully rated or series rated
- Interrupting ratings up to 200 kA symmetrical
- Suitable for use as Service Entrance Equipment, when specified on the order
- See **Pages V2-T3-7** through **V2-T3-23** for additional information

Standards and Certifications

- UL 67, UL 50
- Federal Specification W-P-115c
- Refer to **Page V2-T3-7** for additional information

Listed

Product Selection

Type PRL2a

PRL2a

Ampere Rating	Interrupting Rating (kA Symmetrical) 240 Vac	480Y/277 Vac	125/250 Vdc	Breaker Type
Main Lug Only				
100	—	—	—	—
225	—	—	—	—
400	—	—	—	—
600	—	—	—	—
Main Breaker				
100	65	14	14	GHB
100	18	14	10	EHD
100	65	35	10	FD, FDE
100	100	65	22	HFD, HFDE
100	200	100	22	FDC
225	65	—	—	ED
225	65	35	10	FD, FDE
225	100	65	22	HFD, HFDE
225	200	100	22	FDC
250	65	35	10	JD
250	100	65	22	HJD
250	200	100	22	JDC
400	65	35	10	KD
400	100	65	22	HKD
400	100	65	—	LHH
400	200	100	22	KDC
600	65	35	22	LGE
600	85	50	22	LGS
600	100	65	42	LGH
600	200	100	42	LGC, LGU

PRL2a Branch Circuit Breakers

Ampere Rating	Interrupting Rating (kA Symmetrical) 240 Vac ①	480Y/277 Vac	125/250 Vdc	Breaker Type
15–20	65	14	—	GHQ ②
15–20	65	14	14	GHB ②
25–60	65	14	14	GHB ②
70–100	65	14	14	GHB ②
15–30	65	25	—	HGHB ②
15–20	65	14	—	GHQRSP ③
15–30	65	14	—	GHBS ②③
15–60	—	14	—	GHBGFEP ②④
15–20	—	14	—	GHBHID ②⑤
Provision	—	—	—	—

Notes

① Interrupting ratings in this column are applicable to 120 Vac for single-pole breakers.
② Must be used on 480Y/277 V grounded wye systems only.
③ Remote controllable breaker.
④ GFP for 30 mA equipment protection. Requires two-pole spaces. 277 Vac only.
⑤ HID (High Intensity Discharge) rated breaker.

Box Sizing and Selection

Approximate Dimensions in Inches (mm)

Assembled Circuit Breaker Panelboards and Lighting Controls

Box size and box and trim catalog numbers for all standard panelboard types are found on **Page V2-T3-41**.

Instructions

1. Using description of the required panelboard, select the rating and type of main required.
2. Count the total number of branch circuit poles, including provisions, required in the panelboard. Do not count main breaker poles. Convert two- or three-pole branch breaker to single-poles, i.e., three-pole breaker, count as three poles. Determine sub-feed breaker or through-feed lug requirements.
3. Select the main ampere rating section from table on **Page V2-T3-41**.
4. Select panelboard type from first column, main breaker frame, if applicable, from second column, and sub-feed breaker frame, if applicable, from the third column.
5. From Step #2, determine the number of branch circuits in Column 4.
6. Read box size, box and trim catalog numbers across columns to the right. Specify surface or flush mounting on the order.

Cabinets

Fronts are code-gauge steel, ANSI-61 light gray painted finish.

Boxes are code-gauge galvanized steel without knockouts. Standard depth is 5-3/4 inches (146.1 mm). Standard width is 20 inches (508.0 mm). An optional 28-inch (711.2 mm) wide box is available.

Top and Bottom Gutters

5-1/2 inches (139.7 mm) minimum.

Approximate Dimensions in Inches (mm)

PRL2a Panelboard Sizing

Panelboard Types	Main Breaker Types and Mounting Position (H) = Horizontal (V) = Vertical	Sub-Feed Breaker Types and Mounting Position (H) = Horizontal (V) = Vertical	Maximum No. of Branch Circuits Including Provisions	Box Dimensions ① Height	Width	Depth	YS Box Catalog Number	LT Trim Catalog Number	EZ Box Catalog Number	EZ Trim Catalog Number
100 A										
Main breaker	GHB (H)	—	15	36.00 (914.4)	20.00 (508.0)	5.75 (146.1)	**YS2036**	**LT2036S or F**	**EZB2036R**	**EZT2036S or F**
		—	27	48.00 (1219.2)	20.00 (508.0)	5.75 (146.1)	**YS2048**	**LT2048S or F**	**EZB2048R**	**EZT2048S or F**
		—	39	48.00 (1219.2)	20.00 (508.0)	5.75 (146.1)	**YS2048**	**LT2048S or F**	**EZB2048R**	**EZT2048S or F**
		—	42	60.00 (1524.0)	20.00 (508.0)	5.75 (146.1)	**YS2060**	**LT2060S or F**	**EZB2060R**	**EZT2060S or F**
Main lugs or main breaker	EHD FD, HFD, FDE HFDE (V)	—	18	36.00 (914.4)	20.00 (508.0)	5.75 (146.1)	**YS2036**	**LT2036S or F**	**EZB2036R**	**EZT2036S or F**
		—	30	48.00 (1219.2)	20.00 (508.0)	5.75 (146.1)	**YS2048**	**LT2048S or F**	**EZB2048R**	**EZT2048S or F**
		—	42	48.00 (1219.2)	20.00 (508.0)	5.75 (146.1)	**YS2048**	**LT2048S or F**	**EZB2048R**	**EZT2048S or F**
Main lugs or main breaker with 100A through-feed lugs or sub-feed breaker	EHD FD, FDE HFD, HFDE (V)	EHD FD HFD (V)	18	48.00 (1219.2)	20.00 (508.0)	5.75 (146.1)	**YS2048**	**LT2048S or F**	**EZB2048R**	**EZT2048S or F**
			30	48.00 (1219.2)	20.00 (508.0)	5.75 (146.1)	**YS2048**	**LT2048S or F**	**EZB2048R**	**EZT2048S or F**
			42	60.00 (1524.0)	20.00 (508.0)	5.75 (146.1)	**YS2060**	**LT2060S or F**	**EZB2060R**	**EZT2060S or F**
225 A										
Main lugs or main breaker	EDB, EDS, ED, EDH, FD, HFD FDE, HFDE (V)	—	18	36.00 (914.4)	20.00 (508.0)	5.75 (146.1)	**YS2036**	**LT2036S or F**	**EZB2036R**	**EZT2036S or F**
		—	30	48.00 (1219.2)	20.00 (508.0)	5.75 (146.1)	**YS2048**	**LT2048S or F**	**EZB2048R**	**EZT2048S or F**
		—	42	48.00 (1219.2)	20.00 (508.0)	5.75 (146.1)	**YS2048**	**LT2048S or F**	**EZB2048R**	**EZT2048S or F**
	JD, HJD JDC (V)	—	18	60.00 (1524.0)	20.00 (508.0)	5.75 (146.1)	**YS2060**	**LT2060S or F**	**EZB2060R**	**EZT2060S or F**
		—	30	60.00 (1524.0)	20.00 (508.0)	5.75 (146.1)	**YS2060**	**LT2060S or F**	**EZB2060R**	**EZT2060S or F**
		—	42	72.00 (1828.8)	20.00 (508.0)	5.75 (146.1)	**YS2072**	**LT2072S or F**	**EZB2072R**	**EZT2072S or F**
Main lugs or main breaker with 225A through-feed lugs or sub-feed breaker	EHD, FD, HFD, EDB, EDS, ED, EDH FDE, HFDE (V)	EHD, FD, HFD, EDB, EDS, ED, EDH (V)	18	48.00 (1219.2)	20.00 (508.0)	5.75 (146.1)	**YS2048**	**LT2048S or F**	**EZB2048R**	**EZT2048S or F**
			30	48.00 (1219.2)	20.00 (508.0)	5.75 (146.1)	**YS2048**	**LT2048S or F**	**EZB2048R**	**EZT2048S or F**
			42	60.00 (1524.0)	20.00 (508.0)	5.75 (146.1)	**YS2060**	**LT2060S or F**	**EZB2060R**	**EZT2060S or F**
	JD, HJD JDC (V)	EHD, FD, HFD, EDB, EDS, ED, EDH (V)	18	60.00 (1524.0)	20.00 (508.0)	5.75 (146.1)	**YS2060**	**LT2060S or F**	**EZB2060R**	**EZT2060S or F**
			30	72.00 (1828.8)	20.00 (508.0)	5.75 (146.1)	**YS2072**	**LT2072S or F**	**EZB2072R**	**EZT2072S or F**
			42	72.00 (1828.8)	20.00 (508.0)	5.75 (146.1)	**YS2072**	**LT2072S or F**	**EZB2072R**	**EZT2072S or F**
400 A										
Main lugs or main breaker	DK, KD, HKD, KDC, LHH (V)	—	18	60.00 (1524.0)	20.00 (508.0)	5.75 (146.1)	**YS2060**	**LT2060S or F**	**EZB2060R**	**EZT2060S or F**
		—	30	60.00 (1524.0)	20.00 (508.0)	5.75 (146.1)	**YS2060**	**LT2060S or F**	**EZB2060R**	**EZT2060S or F**
		—	42	72.00 (1828.8)	20.00 (508.0)	5.75 (146.1)	**YS2072**	**LT2072S or F**	**EZB2072R**	**EZT2072S or F**
Main lugs or main breaker with 225A through-feed lugs or sub-feed breaker	DK, KD, HKD, KDC, LHH (V)	EHD, FD, HFD, EDB, EDS, ED, EDH (V)	18	60.00 (1524.0)	20.00 (508.0)	5.75 (146.1)	**YS2060**	**LT2060S or F**	**EZB2060R**	**EZT2060S or F**
			30	72.00 (1828.8)	20.00 (508.0)	5.75 (146.1)	**YS2072**	**LT2072S or F**	**EZB2072R**	**EZT2072S or F**
			42	72.00 (1828.8)	20.00 (508.0)	5.75 (146.1)	**YS2072**	**LT2072S or F**	**EZB2072R**	**EZT2072S or F**
Main lugs or main breaker with 400A through-feed lugs or sub-feed breaker	DK, KD, HKD, KDC, LHH (V)	JD, HJD, JDC, DK, KD, HKD, KDC (V)	18	72.00 (1828.8)	20.00 (508.0)	5.75 (146.1)	**YS2072**	**LT2072S or F**	**EZB2072R**	**EZT2072S or F**
			30	90.00 (2286.0)	20.00 (508.0)	5.75 (146.1)	**YS2090**	**LT2090S or F**	**EZB2090R**	**EZT2090S or F**
			42	90.00 (2286.0)	20.00 (508.0)	5.75 (146.1)	**YS2090**	**LT2090S or F**	**EZB2090R**	**EZT2090S or F**
600 A										
Main breaker	LGE, LGS, LGH, LGC, LGU (V)	—	18	60.00 (1524.0)	20.00 (508.0)	5.75 (146.1)	**YS2060**	**LT2060S or F**	**EZB2060R**	**EZT2060S or F**
		—	30	60.00 (1524.0)	20.00 (508.0)	5.75 (146.1)	**YS2060**	**LT2060S or F**	**EZB2060R**	**EZT2060S or F**
		—	42	72.00 (1828.8)	20.00 (508.0)	5.75 (146.1)	**YS2072**	**LT2072S or F**	**EZB2072R**	**EZT2072S or F**
Main lugs or main breaker with 225 A through-feed lugs or sub-feed breaker	LGE, LGS, LGH, LGC, LGU (V)	FD, HFD, EDS, ED, EDH (V)	18	72.00 (1828.8)	20.00 (508.0)	5.75 (146.1)	**YS2072**	**LT2072S or F**	**EZB2072R**	**EZT2072S or F**
			30	72.00 (1828.8)	20.00 (508.0)	5.75 (146.1)	**YS2072**	**LT2072S or F**	**EZB2072R**	**EZT2072S or F**
			42	90.00 (2286.0)	20.00 (508.0)	5.75 (146.1)	**YS2090**	**LT2090S or F**	**EZB2090R**	**EZT2090S or F**
Main breaker with 400 A through-feed lugs or sub-feed breaker	LGE, LGS, LGH, LGC, LGU (V)	DK, KD, HKD, KDC (V)	18	72.00 (1828.8)	20.00 (508.0)	5.75 (146.1)	**YS2072**	**LT2072S or F**	**EZB2072R**	**EZT2072S or F**
			30	90.00 (2286.0)	20.00 (508.0)	5.75 (146.1)	**YS2090**	**LT2090S or F**	**EZB2090R**	**EZT2090S or F**
			42	90.00 (2286.0)	20.00 (508.0)	5.75 (146.1)	**YS2090**	**LT2090S or F**	**EZB2090R**	**EZT2090S or F**
Main breaker with 600 A through-feed lugs or sub-feed breaker	LGE, LGS, LGH, LGC, LGU (V)	LGE, LGS, LGH, LGC (V)	18	72.00 (1828.8)	20.00 (508.0)	5.75 (146.1)	**YS2072**	**LT2072S or F**	**EZB2072R**	**EZT2072S or F**
			30	90.00 (2286.0)	20.00 (508.0)	5.75 (146.1)	**YS2090**	**LT2090S or F**	**EZB2090R**	**EZT2090S or F**
			42	90.00 (2286.0)	20.00 (508.0)	5.75 (146.1)	**YS2090**	**LT2090S or F**	**EZB2090R**	**EZT2090S or F**

Note

① Smaller panelboard box sizes are available if required. Contact Eaton for application information.

Type PRL2aF

Contents

Description	*Page*
Product Description	**V2-T3-7**
Application Description	**V2-T3-8**
Standards and Certifications	**V2-T3-10**
Technical Data and Specifications	**V2-T3-11**
Type PRL1a	**V2-T3-26**
Type PRL1aF	**V2-T3-30**
Type PRL1a-LX	**V2-T3-34**
Type PRL2a	**V2-T3-38**
Type PRL2aF	
Product Selection	**V2-T3-43**
Box Sizing and Selection	**V2-T3-44**
Type PRL2a-LX	**V2-T3-46**
Retrofit Panelboard	**V2-T3-50**
Type PRL3a	**V2-T3-58**
Type PRL3E	**V2-T3-62**
Type PRL4	**V2-T3-66**
Type PRL4D	**V2-T3-76**
Type PRL5P	**V2-T3-86**

Type PRL2aF

Product Description

- 240 Vac maximum
- 400A maximum mains
- Three-phase four-wire, single-phase three-wire
- 30A maximum branch devices
- Factory assembled

Application Description

- Lighting branch panelboard
- Instrument protection
- Fully rated
- Interrupting ratings up to 200 kA symmetrical when protected by fuse

Standards and Certifications

- UL 67, UL 50

Listed

Product Selection

Type PRL2aF

PRL2aF

Ampere Rating	Interrupting Rating (kA Sym.) 480Y/277 Vac	Breaker Type
Main Lug Only		
100	—	—
225	—	—
400	—	—
Main Breaker		
100	14	EHD
100	35	FD
100	35	FDE
100	35	HFD
100	35	HFDE
225	35	FD
225	35	FDE
225	65	HFD
225	65	HFDE
400	35	KD
400	65	HKD
400	100	KDC
400	100	LHH

PRL2aF Branch Overcurrent Devices

Hybrid breaker/fuse (Class CC) branch device

Ampere Rating	Interrupting Rating (kA Sym.) 480Y/277 Vac	Breaker Type
30	200	Hybrid

Box Sizing and Selection

Approximate Dimensions in Inches (mm)

Assembled Circuit Breaker Panelboards

Box size and box and trim catalog numbers for all standard panelboard types are found on **Page V2-T3-45**.

Instructions

1. Using description of the required panelboard, select the rating and type of main required.
2. Count the total number of branch circuit poles, including provisions, required in the panelboard. Determine through-feed lug requirements.
3. Select the main ampere rating section from table on **Page V2-T3-45**.
4. Select panelboard type from first column, main breaker frame, if applicable, from second column.
5. From Step #2, determine the number of branch circuits in Column 4.
6. Read box size, box and trim catalog numbers across columns to the right. Specify surface or flush mounting on the order.

Cabinets

Fronts are code-gauge steel, ANSI-61 light gray painted finish.

Boxes are code-gauge galvanized steel without knockouts. Standard depth is 5-3/4 inches (146.1 mm). Standard width is 20 inches (508.0 mm). An optional 28-inch (711.2 mm) wide box is available.

Top and Bottom Gutters

5-1/2 inches (139.7 mm) minimum.

Approximate Dimensions in Inches (mm)

PRL2aF Panelboard Sizing

Panelboard Types	Main Breaker Types and Mounting Position (H) = Horizontal (V) = Vertical	Maximum No. of Branch Circuits Including Provisions	Box Dimensions ① Height	Width	Depth	YS Box Catalog Number	LT Trim Catalog Number	EZ Box Catalog Number	EZ Trim Catalog Number
100A									
Main lugs or main breaker	EHD FD, HFD, FDE HFDE (V)	18	36.00 (914.4)	20.00 (508.0)	5.75 (146.1)	**YS2036**	**LT2036S or F**	**EZB2036R**	**EZT2036S or F**
		30	48.00 (1219.2)	20.00 (508.0)	5.75 (146.1)	**YS2048**	**LT2048S or F**	**EZB2048R**	**EZT2048S or F**
		42	48.00 (1219.2)	20.00 (508.0)	5.75 (146.1)	**YS2048**	**LT2048S or F**	**EZB2048R**	**EZT2048S or F**
Main lugs or main breaker with 100A through-feed lugs or sub-feed breaker	EHD FD, FDE HFD, HFDE (V)	18	48.00 (1219.2)	20.00 (508.0)	5.75 (146.1)	**YS2048**	**LT2048S or F**	**EZB2048R**	**EZT2048S or F**
		30	48.00 (1219.2)	20.00 (508.0)	5.75 (146.1)	**YS2048**	**LT2048S or F**	**EZB2048R**	**EZT2048S or F**
		42	60.00 (1524.0)	20.00 (508.0)	5.75 (146.1)	**YS2060**	**LT2060S or F**	**EZB2060R**	**EZT2060S or F**
225A									
Main lugs or main breaker	EDB, EDS, ED, EDH, FD, HFD FDE, HFDE (V)	18	36.00 (914.4)	20.00 (508.0)	5.75 (146.1)	**YS2036**	**LT2036S or F**	**EZB2036R**	**EZT2036S or F**
		30	48.00 (1219.2)	20.00 (508.0)	5.75 (146.1)	**YS2048**	**LT2048S or F**	**EZB2048R**	**EZT2048S or F**
		42	48.00 (1219.2)	20.00 (508.0)	5.75 (146.1)	**YS2048**	**LT2048S or F**	**EZB2048R**	**EZT2048S or F**
	JD, HJD JDC (V)	18	60.00 (1524.0)	20.00 (508.0)	5.75 (146.1)	**YS2060**	**LT2060S or F**	**EZB2060R**	**EZT2060S or F**
		30	60.00 (1524.0)	20.00 (508.0)	5.75 (146.1)	**YS2060**	**LT2060S or F**	**EZB2060R**	**EZT2060S or F**
		42	72.00 (1828.8)	20.00 (508.0)	5.75 (146.1)	**YS2072**	**LT2072S or F**	**EZB2072R**	**EZT2072S or F**
Main lugs or main breaker with 225A through-feed lugs	EHD, FD, HFD, EDB, EDS, ED, EDH FDE, HFDE (V)	18	48.00 (1219.2)	20.00 (508.0)	5.75 (146.1)	**YS2048**	**LT2048S or F**	**EZB2048R**	**EZT2048S or F**
		30	48.00 (1219.2)	20.00 (508.0)	5.75 (146.1)	**YS2048**	**LT2048S or F**	**EZB2048R**	**EZT2048S or F**
		42	60.00 (1524.0)	20.00 (508.0)	5.75 (146.1)	**YS2060**	**LT2060S or F**	**EZB2060R**	**EZT2060S or F**
	JD, HJD JDC (V)	18	60.00 (1524.0)	20.00 (508.0)	5.75 (146.1)	**YS2060**	**LT2060S or F**	**EZB2060R**	**EZT2060S or F**
		30	72.00 (1828.8)	20.00 (508.0)	5.75 (146.1)	**YS2072**	**LT2072S or F**	**EZB2072R**	**EZT2072S or F**
		42	72.00 (1828.8)	20.00 (508.0)	5.75 (146.1)	**YS2072**	**LT2072S or F**	**EZB2072R**	**EZT2072S or F**
400A									
Main lugs or main breaker	KD, HKD, KDC, LHH (V)	18	60.00 (1524.0)	20.00 (508.0)	5.75 (146.1)	**YS2060**	**LT2060S or F**	**EZB2060R**	**EZT2060S or F**
		30	60.00 (1524.0)	20.00 (508.0)	5.75 (146.1)	**YS2060**	**LT2060S or F**	**EZB2060R**	**EZT2060S or F**
		42	72.00 (1828.8)	20.00 (508.0)	5.75 (146.1)	**YS2072**	**LT2072S or F**	**EZB2072R**	**EZT2072S or F**
Main lugs or main breaker with 225A through-feed lugs	KD, HKD, KDC, LHH (V)	18	60.00 (1524.0)	20.00 (508.0)	5.75 (146.1)	**YS2060**	**LT2060S or F**	**EZB2060R**	**EZT2060S or F**
		30	72.00 (1828.8)	20.00 (508.0)	5.75 (146.1)	**YS2072**	**LT2072S or F**	**EZB2072R**	**EZT2072S or F**
		42	72.00 (1828.8)	20.00 (508.0)	5.75 (146.1)	**YS2072**	**LT2072S or F**	**EZB2072R**	**EZT2072S or F**
Main lugs or main breaker with 400A through-feed lugs	KD, HKD, KDC, LHH (V)	18	72.00 (1828.8)	20.00 (508.0)	5.75 (146.1)	**YS2072**	**LT2072S or F**	**EZB2072R**	**EZT2072S or F**
		30	90.00 (2286.0)	20.00 (508.0)	5.75 (146.1)	**YS2090**	**LT2090S or F**	**EZB2090R**	**EZT2090S or F**
		42	90.00 (2286.0)	20.00 (508.0)	5.75 (146.1)	**YS2090**	**LT2090S or F**	**EZB2090R**	**EZT2090S or F**

Note

① Smaller panelboard box sizes are available if required. Contact Eaton for application information.

Type PRL2a-LX, Column Type

Contents

Description	*Page*
Product Description	**V2-T3-7**
Application Description	**V2-T3-8**
Standards and Certifications	**V2-T3-10**
Technical Data and Specifications	**V2-T3-11**
Type PRL1a	**V2-T3-26**
Type PRL1aF	**V2-T3-30**
Type PRL1a-LX	**V2-T3-34**
Type PRL2a	**V2-T3-38**
Type PRL2aF	**V2-T3-42**
Type PRL2a-LX	
Product Selection	**V2-T3-47**
Box Sizing and Selection	**V2-T3-48**
Retrofit Panelboard	**V2-T3-50**
Type PRL3a	**V2-T3-58**
Type PRL3E	**V2-T3-62**
Type PRL4	**V2-T3-66**
Type PRL4D	**V2-T3-76**
Type PRL5P	**V2-T3-86**

Type PRL2a-LX

Product Description

- 480Y/277 Vac maximum (125 Vdc)
- Three-phase four-wire, three-phase three-wire, single-phase three-wire, single-phase two-wire
- 225A maximum mains
- 100A maximum branch breakers
- Bolt-on branch breakers
- Factory assembled
- Refer to Refer to **Page V2-T3-7** for additional information

Application Description

- Lighting branch panelboard
- Column mounting width
- Fully rated or series rated
- Interrupting ratings up to 200 kA symmetrical
- See **Pages V2-T3-7** through **V2-T3-23** for additional information

Standards and Certifications

- UL 67, UL 50
- Federal Specification W-P-115c
- Refer to **Page V2-T3-7** for additional information

Listed

Product Selection

Type PRL2a-LX

PRL2a-LX

Ampere Rating	Interrupting Rating (kA Symmetrical) 240 Vac	480Y/277 Vac	125/250 Vdc	Breaker Type
Main Lug Only				
100	—	—	—	—
225	—	—	—	—
Main Breaker				
100	65	14	14	GHB
100	18	14	10	EHD
100	65	35	10	FD, FDE
100	100	65	22	HFD, HFDE
100	200	100	22	FDC
225	65	—	—	ED
225	65	35	10	FD
225	100	65	22	HFD
225	200	100	22	FDC

Branch Circuit Breakers—PRL2a-LX

Ampere Rating	Interrupting Rating (kA Symmetrical) 240 Vac ①	480Y/277 Vac	125/250 Vdc	Breaker Type
15–20	65	14	—	GHQ ②
15–20	65	14	14	GHB ②
25–60	65	14	14	GHB ②
70–100	65	14	14	GHB ②
15–30	65	25	—	HGHB ②
15–20	65	14	—	GHQRSP ③
15–30	65	14	—	GHBS ②③
15–60	—	14	—	GHBGFEP ②④
Provision	—	—	—	—

Pull Box With Extension Trough

Includes pull box with trough extension. For additional trough extensions, refer to table below.

Description	Catalog Number
Pullbox with 36-inch trough	**XCTXB036**
Pullbox with 48-inch trough	**XCTXB048**
Pullbox with 60-inch trough	**XCTXB060**
Pullbox with 72-inch trough	**XCTXB072**
Pullbox with 84-inch trough	**XCTXB084**

Neutral Bars

When Column Type panels are furnished with trough extensions and pull box, the neutral bar will be placed in the pull box unless otherwise specified.

When troughs and pull box are not furnished, the neutral bar will be located on the panel at the same end as the main.

Additional Trough Extensions

Width and depth are the same as the panelboard.

Length Inches (mm)	Catalog Number
36.00 (914.4)	**CTXB036**
48.00 (1219.2)	**CTXB048**
60.00 (1524.0)	**CTXB060**
72.00 (1828.8)	**CTXB072**
84.00 (2133.6)	**CTXB084**

Notes

① Interrupting ratings in this column are applicable to 120 Vac for single-pole breakers.
② At 480V, must be used on 480Y/277V grounded wye systems only.
③ Solenoid operated breaker.
④ GFP for 30 mA equipment protection. Requires two pole spaces.

Box Sizing and Selection

Approximate Dimensions in Inches (mm)

Assembled Circuit Breaker Panelboards

Box size, box and trim catalog numbers for standard column type panelboards listed are available from tables on **Page V2-T3-49**.

Instructions

1. Using description of the required panelboard, select the rating and type of main required.
   a. 100A panelboards—**Page V2-T3-49**.
   b. 225A panelboards—**Page V2-T3-49**.
2. Count the total number of branch circuit poles, including provisions, required in the panelboard. Do not count main breaker poles. Convert two- or three-pole branch breaker to single poles, i.e., three-pole breaker, count as three poles.

   Determine sub-feed breaker or through-feed lug requirements.
3. Select the panelboard main ampere rating from tables on **Page V2-T3-49**.
4. Panelboard Type from first column, main breaker Frame and Designation, if applicable from second column, and sub-feed breaker Frame and Designation, if applicable, from the third column.
5. From Step #2, determine the number of branch circuits in Column 4.
6. Read box size, box and trim catalog numbers across columns to the right. All panels are surface mounted.

Cabinets

Boxes and trims are code-gauge steel, ANSI-61 light gray painted finish.

Boxes are furnished without knockouts. Standard depth is 6.00 inches (152.4 mm). Standard width is 8.63 inches (219.1 mm).

Top and Bottom Gutters

4.50 inches (114.3 mm) minimum.

Left Side Gutter

3.31 inches (84.2 mm) minimum.

Pull Box

Pull box is furnished without knockouts. Standard dimensions:

Pull Box Dimensions

Height	Width	Depth
12.00 (304.8)	16.00 (406.4)	6.00 (152.4)

PRL2a-LX Trough Extension

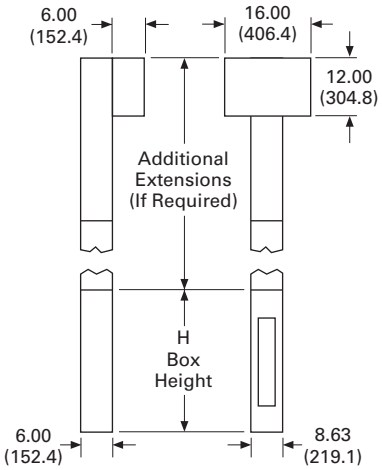

Trough Extension

When extension troughs are used, Section 376 of the National Electrical Code, reading as follows, should be observed: 376. Number of Conductors. Wireways shall not contain more than 30 conductors at any cross section, unless the conductors are for signal circuits or are control conductors between a motor and its starter and used only for starting duty. The sum of the cross-sectional areas of all contained conductors at any cross section of a wireway shall not exceed 20% of the interior cross-sectional area of the wireway.

Approximate Dimensions in Inches (mm)

100A Maximum PRL2a-LX Column Type Panelboard Sizing

Panelboard Types	Main Breaker Types Mounting: (H) = Horizontal (V) = Vertical	Sub-Feed Breaker Types Vertical Mounting	Maximum Number of Branch Circuits Including Provisions	Box Dimensions Height	Width	Depth	Box Catalog Number	Trim Catalog Number ①
Main breaker	GHB (H)	—	27	69.00 (1752.6)	8.63 (219.2)	6.00 (152.4)	**YSC969**	**LTC969S**
		—	39	81.00 (2057.7)	8.63 (219.2)	6.00 (152.4)	**YSC981**	**LTC981S**
Main lugs or main breaker	EHD, FD HFD, FDC (V)	—	30	69.00 (1752.6)	8.63 (219.2)	6.00 (152.4)	**YSC969**	**LTC969S**
		—	42	81.00 (2057.7)	8.63 (219.2)	6.00 (152.4)	**YSC981**	**LTC981S**
Main lugs or main breaker with 100A through-feed lugs or sub-feed breaker	EHD, FD HFD, FDC (V)	EHD, FD, HFD	30	78.00 (1981.2)	8.63 (219.2)	6.00 (152.4)	**YSC978**	**LTC978S**
			42	90.00 (2286.0)	8.63 (219.2)	6.00 (152.4)	**YSC990**	**LTC990S**

225A Maximum PRL2a-LX Column Type Panelboard Sizing

Panelboard Types	Main Breaker Types Vertical Mounting	Sub-Feed Breaker Types	Maximum Number of Branch Circuits Including Provisions	Box Dimensions Height	Width	Depth	Box Catalog Number	Trim Catalog Number ①
Main lugs or main breaker	ED, FD HFD, FDC	—	30	69.00 (1752.6)	8.63 (219.2)	6.00 (152.4)	**YSC969**	**LTC969S**
		—	42	81.00 (2057.7)	8.63 (219.2)	6.00 (152.4)	**YSC981**	**LTC981S**
Main lugs or main breaker with 225A through-feed lugs or sub-feed breaker	ED, FD HFD, FDC	EHD, FD, HFD, ED, EDH	30	78.00 (1981.2)	8.63 (219.2)	6.00 (152.4)	**YSC978**	**LTC978S**
			42	90.00 (2286.0)	8.63 (219.2)	6.00 (152.4)	**YSC990**	**LTC990S**

Note

① Add suffix B to trim catalog number for bottom fed panelboards (i.e., LTC969SB).

Retrofit Panelboard

Contents

Description	*Page*
Product Description	**V2-T3-7**
Application Description	**V2-T3-8**
Standards and Certifications	**V2-T3-10**
Technical Data and Specifications	**V2-T3-11**
Type PRL1a	**V2-T3-26**
Type PRL1aF	**V2-T3-30**
Type PRL1a-LX	**V2-T3-34**
Type PRL2a	**V2-T3-38**
Type PRL2aF	**V2-T3-42**
Type PRL2a-LX	**V2-T3-46**
Retrofit Panelboard	**V2-T3-50**
Catalog Number Selection	**V2-T3-51**
Product Selection	**V2-T3-52**
Trim Selection	**V2-T3-54**
Custom Trim Selection	**V2-T3-55**
Application Guidelines	**V2-T3-56**
Options and Accessories	**V2-T3-57**
Type PRL3a	**V2-T3-58**
Type PRL3E	**V2-T3-62**
Type PRL4	**V2-T3-66**
Type PRL4D	**V2-T3-76**
Type PRL5P	**V2-T3-86**

Retrofit Panelboard

Product Description

- PRL1R—240 Vac; PRL2R—480Y/277V
- Single-phase three-wire or single two-wire
- Three-phase three-wire or three-phase four-wire
- 225A maximum
- 100A maximum branch breakers
- Standard PRL1R fits existing box depths from 4.50–6.00 inches deep; Standard PRL2R fits existing box depths from 4.75–6.00 inches deep (without additional accessories)
- Integrally mounted neutral assembly
- Grounding lug included
- Neutral and ground convertible from left-right
- Bolt-on branch breakers
- Factory assembled

Application Description

- Lighting branch panelboard
- Fully rated or series rated
- Interrupting capacities to 100 kA symmetrical
- Suitable for use as Service Entrance Equipment where specified on the order

Standards and Certifications

- UL 67
- Federal Specification W-P-115c
- CSA C22.2 No. 29

Listed

Catalog Number Selection

Retrofit Panelboard

P1R B 1 C 1 30 BAB 100 TL B

Panelboard Type
- **P1R** = ▯240V
- **P2R** = > 480Y/277V

Main Device
- **L** = MLO
- **B** = Main breaker

System Type
- **1** = Single-phase (three-wire)
- **3** = Three-phase (three- or four-wire)

Bus Type
- **A** = Aluminum
- **C** = Copper

Bus Ampere Rating
- **1** = 100A
- **2** = 225A

Circuits
- **18** = 18
- **30** = 30
- **42** = 42

Main Breaker
- **Blank** = MLO
- **BAB**
- **GHB** ①
- **ED**
- **FD**
- **EHD** ①
- **FD** ①

Main Breaker Amperes
- **Blank** = MLO
- **30** = 30A
- **60** = 60A
- **100** = 100A
- **125** = 125A
- **150** = 150A
- **175** = 175A
- **200** = 200A
- **225** = 225A

Sub-Feed Device
- **Blank** = None
- **TL** = Through-feed lugs

Feed
- **B** = Bottom fed
- **T** = Top fed

Trim Selection

RCT B 20 00 36 50 F S

Renovation Panelboard Custom Trim
- **RCT**

Door Style
- **A** = 18-circuit MLO/ branch-mounted MCB
- **B** = 30-circuit MLO/ branch-mounted MCB; 18-circuit F-Frame MCB
- **C** = 42-circuit MLO/ branch-mounted MCB
- **D** = 30-circuit F-Frame MCB
- **E** = 42-circuit F-Frame MCB

Existing Box Width (Inches)

Existing Box Width (Fraction)
- **00** = None
- **13** = 1/8
- **25** = 1/4
- **38** = 3/8
- **50** = 1/2
- **63** = 5/8
- **75** = 3/4
- **88** = 7/8

Existing Box Height (Inches)

Existing Box Height (Fraction)
- **00** = None
- **13** = 1/8
- **25** = 1/4
- **38** = 3/8
- **50** = 1/2
- **63** = 5/8
- **75** = 3/4
- **88** = 7/8

Trim Style
- **S** = Surface
- **F** = Flush ②

Trim Finish Option ③
- **Blank** = ANSI 61 painted steel
- **S** = Brushed stainless steel ④
- **P** = Custom painted steel
- **C** = Custom painted stainless steel

Notes

① P2R only.
② Flush trims include 1-inch overlap per side.
③ Standard trim includes 12-gauge steel painted ANSI 61 grey.
④ Stainless trims provided as 304 standard. Optional 316 available.

Product Selection

Retrofit Panelboard

P1R—Aluminum Bus, Single-Phase or Three-Phase ①

Ampere Rating	Number of Circuits	Interrupting Rating (kA Sym.) 240 Vac	Main Breaker Type	Single-Phase Three-Wire—Single-Phase Two-Wire Catalog Number	Three-Phase Three-Wire—Three-Phase Four-Wire Catalog Number
Main Lug Only					
100	18	—	MLO	**P1RL1A118**	**P1RL3A118**
	30	—	MLO	**P1RL1A130**	**P1RL3A130**
	42	—	MLO	**P1RL1A142**	**P1RL3A142**
225	18	—	MLO	**P1RL1A218**	**P1RL3A218**
	30	—	MLO	**P1RL1A230**	**P1RL3A230**
	42	—	MLO	**P1RL1A242**	**P1RL3A242**
Main Breaker					
100	18	10	BAB ②	**P1RB1A118BAB** ③	**P1RB3A118BAB** ③
	30	10	BAB ②	**P1RB1A130BAB** ③	**P1RB3A130BAB** ③
	42	10	BAB ②	**P1RB1A142BAB** ③	**P1RB3A142BAB** ③
	18	18	EHD	**P1RB1A118EHD** ③	**P1RB3A118EHD** ③
	30	18	EHD	**P1RB1A130EHD** ③	**P1RB3A130EHD** ③
	42	18	EHD	**P1RB1A142EHD** ③	**P1RB3A142EHD** ③
	18	22	QBHW ②	**P1RB1A118QBHW** ③	**P1RB3A118QBHW** ③
	30	22	QBHW ②	**P1RB1A130QBHW** ③	**P1RB3A130QBHW** ③
	42	22	QBHW ②	**P1RB1A142QBHW** ③	**P1RB3A142QBHW** ③
	18	65	ED	**P1RB1A118ED** ③	**P1RB3A118ED** ③
	30	65	ED	**P1RB1A130ED** ③	**P1RB3A130ED** ③
	42	65	ED	**P1RB1A142ED** ③	**P1RB3A142ED** ③
	18	100	EDH	**P1RB1A118EDH** ③	**P1RB3A1-8EDH** ③
	30	100	EDH	**P1RB1A130EDH** ③	**P1RB3A130EDH** ③
	42	100	EDH	**P1RB1A142EDH** ③	**P1RB3A142EDH** ③
225	18	65	ED	**P1RB1A218ED** ③	**P1RB3A218ED** ③
	30	65	ED	**P1RB1A230ED** ③	**P1RB3A230ED** ③
	42	65	ED	**P1RB1A242ED** ③	**P1RB3A242ED** ③
	18	100	EDH	**P1RB1A218EDH** ③	**P1RB3A218EDH** ③
	30	100	EDH	**P1RB1A230EDH** ③	**P1RB3A230EDH** ③
	42	100	EDH	**P1RB1A242EDH** ③	**P1RB3A242EDH** ③

Notes

① Standard trim included. Select standard trim from **Page V2-T3-54**. Custom trims are available for an additional charge. Contact your local Satellite for more information about custom trims.

② BAB and QBHW main devices consume available circuit space positions. (Two circuits for single-phase; three circuits for three-phase.)

③ Add main breaker ampere rating suffix. May NOT exceed main bus rating.

A neutral assembly is included with the base chassis. For single-phase two-wire systems or for three-phase, three-wire systems, do not connect.

Sum of branch circuit amperes not to exceed 140A.

Retrofit Panelboard

P2R—Aluminum Bus, Three-Phase

Ampere Rating	Number of Circuits	Main Breaker Interrupting Rating (kA Sym.) 480Y/277 Vac	Main Breaker Type	Three-Phase Four-Wire Catalog Number
Main Lug Only				
100	18	—	MLO	**P2RL3A118**
	30	—	MLO	**P2RL3A130**
	42	—	MLO	**P2RL3A142**
225	18	—	MLO	**P2RL3A218**
	30	—	MLO	**P2RL3A230**
	42	—	MLO	**P2RL3A242**
Main Breaker				
100	18	14	GHB ①	**P2RB3A118GHB** ②
	30	14	GHB ①	**P2RB3A130GHB** ②
	42	14	GHB ①	**P2RB3A142GHB** ②
	18	14	EHD	**P2RB3A118EHD** ②
	30	14	EHD	**P2RB3A130EHD** ②
	42	14	EHD	**P2RB3A142EHD** ②
	18	35	FD	**P2RB3A118FD** ②
	30	35	FD	**P2RB3A130FD** ②
	42	35	FD	**P2RB3A142FD** ②
	18	65	HFD	**P2RB3A118HFD** ②
	30	65	HFD	**P2RB3A130HFD** ②
	42	65	HFD	**P2RB3A142HFD** ②
	18	100	FDC	**P2RB3A118FDC** ②
	30	100	FDC	**P2RB3A130FDC** ②
	42	100	FDC	**P2RB3A142FDC** ②
225	18	35	FD	**P2RB3A218FD** ②
	30	35	FD	**P2RB3A230FD** ②
	42	35	FD	**P2RB3A242FD** ②
	18	65	HFD	**P2RB3A218HFD** ②
	30	65	HFD	**P2RB3A230HFD** ②
	42	65	HFD	**P2RB3A242HFD** ②
	18	100	FDC	**P2RB3A218FDC** ②
	30	100	FDC	**P2RB3A230FDC** ②
	42	100	FDC	**P2RB3A242FDC** ②

Notes

① GHB main devices consume available circuit space positions. (Three circuits for three-phase.)

② Add main breaker ampere rating suffix. May NOT exceed main bus rating.

A neutral assembly is included with the base chassis.

Trim Selection

Instructions

- In order to meet minimum wire bending space requirements and to ensure ease of installation, minimum enclosure space dimensions have been defined for each chassis. In order to ensure a proper fit, every panelboard to be renovated must be carefully surveyed prior to installation
- Determine the electrical requirements of the panelboard to be renovated (i.e., main breaker or main lugs, amperes, interrupting rating, circuit space, branch breakers, accessories)
- Using the electrical requirement data, select a base chassis and any required breakers, options and accessories
- **Page V2-T3-56** provides the minimum dimensions of the enclosure, in which each base chassis may be installed. These dimensions assume that the chassis is mounted in the center of the existing box, both vertically and horizontally. Where site conditions require the chassis to be offset from this centrally mounted position, it is the installer's responsibility to ensure wire bending space and electrical clearance requirements are met
- **Page V2-T3-56** provides a "Trim Door Size Code." Using this code, select a standard trim from the tables that will fit the outside dimensions of the existing box. Refer to **Page V2-T3-55** to define non-standard trim requirements

Standard Trim Selection—20-Inch (508.0 mm) Wide Enclosure

		Surface Type			Flush Type		
Trim Door Size Code	Enclosure Height—Inches (mm)	Catalog Number	Trim Dimensions—Inches (mm) Height	Width	Catalog Number	Trim Dimensions—Inches (mm) Height	Width
A	24.00 (609.6)	**RTA2024**	24.00 (609.6)	20.00 (508.0)	**RTA2226**	26.00 (660.4)	22.00 (558.8)
A	30.00 (762.0)	**RTA2030**	30.00 (762.0)	20.00 (508.0)	**RTA2232**	32.00 (812.8)	22.00 (558.8)
A	36.00 (914.4)	**RTA2036**	36.00 (914.4)	20.00 (508.0)	**RTA2238**	38.00 (965.2)	22.00 (558.8)
B	30.00 (762.0)	**RTB2030**	30.00 (762.0)	20.00 (508.0)	**RTB2232**	32.00 (812.8)	22.00 (558.8)
B	36.00 (914.4)	**RTB2036**	36.00 (914.4)	20.00 (508.0)	**RTB2238**	38.00 (965.2)	22.00 (558.8)
B	42.00 (1066.8)	**RTB2042**	42.00 (1066.8)	20.00 (508.0)	**RTB2244**	44.00 (1117.6)	22.00 (558.8)
C	36.00 (914.4)	**RTC2036**	36.00 (914.4)	20.00 (508.0)	**RTC2238**	38.00 (965.2)	22.00 (558.8)
C	42.00 (1066.8)	**RTC2042**	42.00 (1066.8)	20.00 (508.0)	**RTC2244**	44.00 (1117.6)	22.00 (558.8)
C	48.00 (1219.2)	**RTC2048**	48.00 (1219.2)	20.00 (508.0)	**RTC2250**	50.00 (1270.0)	22.00 (558.8)
D	30.00 (762.0)	**RTD2030**	30.00 (762.0)	20.00 (508.0)	**RTD2232**	32.00 (812.8)	22.00 (558.8)
D	36.00 (914.4)	**RTD2036**	36.00 (914.4)	20.00 (508.0)	**RTD2238**	38.00 (965.2)	22.00 (558.8)
D	42.00 (1066.8)	**RTD2042**	42.00 (1066.8)	20.00 (508.0)	**RTD2244**	44.00 (1117.6)	22.00 (558.8)
E	36.00 (914.4)	**RTE2036**	36.00 (914.4)	20.00 (508.0)	**RTE2238**	38.00 (965.2)	22.00 (558.8)
E	42.00 (1066.8)	**RTE2042**	42.00 (1066.8)	20.00 (508.0)	**RTE2244**	44.00 (1117.6)	22.00 (558.8)
E	48.00 (1219.2)	**RTE2048**	48.00 (219.2)	20.00 (508.0)	**RTE2250**	50.00 (1270.0)	22.00 (558.8)

Standard Trim Selection—14-Inch (355.6 mm) Wide Enclosure

		Surface Type			Flush Type		
Trim Door Size Code	Enclosure Height—Inches (mm)	Catalog Number	Trim Dimensions—Inches (mm) Height	Width	Catalog Number	Trim Dimensions—Inches (mm) Height	Width
A	24.00 (609.6)	**RTA1424**	24.00 (609.6)	14.00 (355.6)	**RTA1626**	26.00 (660.4)	16.00 (406.4)
A	30.00 (762.0)	**RTA1430**	30.00 (762.0)	14.00 (355.6)	**RTA1632**	32.00 (812.8)	16.00 (406.4)
A	36.00 (914.4)	**RTA1436**	36.00 (914.4)	14.00 (355.6)	**RTA1638**	38.00 (965.2)	16.00 (406.4)
B	30.00 (762.0)	**RTB1430**	30.00 (762.0)	14.00 (355.6)	**RTB1632**	32.00 (812.8)	16.00 (406.4)
B	36.00 (914.4)	**RTB1436**	36.00 (914.4)	14.00 (355.6)	**RTB1638**	38.00 (965.2)	16.00 (406.4)
B	42.00 (1066.8)	**RTB1442**	42.00 (1066.8)	14.00 (355.6)	**RTB1644**	44.00 (1117.6)	16.00 (406.4)
C	36.00 (914.4)	**RTC1436**	36.00 (914.4)	14.00 (355.6)	**RTC1638**	38.00 (965.2)	16.00 (406.4)
C	42.00 (1066.8)	**RTC1442**	42.00 (1066.8)	14.00 (355.6)	**RTC1644**	44.00 (1117.6)	16.00 (406.4)
C	48.00 (1219.2)	**RTC1448**	48.00 (1219.2)	14.00 (355.6)	**RTC1650**	50.00 (1270.0)	16.00 (406.4)
D	30.00 (762.0)	**RTD1430**	30.00 (762.0)	14.00 (355.6)	**RTD1632**	32.00 (812.8)	16.00 (406.4)
D	36.00 (914.4)	**RTD1436**	36.00 (914.4)	14.00 (355.6)	**RTD1638**	38.00 (965.2)	16.00 (406.4)
D	42.00 (1066.8)	**RTD1442**	42.00 (1066.8)	14.00 (355.6)	**RTD1644**	44.00 (1117.6)	16.00 (406.4)
E	36.00 (914.4)	**RTE1436**	36.00 (914.4)	14.00 (355.6)	**RTE1638**	38.00 (965.2)	16.00 (406.4)
E	42.00 (1066.8)	**RTE1442**	42.00 (1066.8)	14.00 (355.6)	**RTE1644**	44.00 (1117.6)	16.00 (406.4)
E	48.00 (1219.2)	**RTE1448**	48.00 (1219.2)	14.00 (355.6)	**RTE1650**	50.00 (1270.0)	16.00 (406.4)

Custom Trim Selection

Instructions

In order to accommodate instances where the standard trims do not suit an installation, custom-sized trims may be ordered. Since the trim mounts to the retrofit chassis, and not the existing enclosure, custom trims can solve many problems encountered with differing enclosure sizes and configurations. Contact your local satellite plant to ensure manufacturability and determine lead time required.

Outer Dimensions

The outer dimensions are the overall OUTSIDE dimensions of the trim. In surface-mounted applications, this is usually the same as the outside dimensions of the enclosure to be renovated. For flush-mounted applications, an additional amount of trim material extends beyond the outer edge of the box, in order to cover any gap between the wall material and the box. Extending the outer dimensions can cover larger than normal wall gaps or imperfections that may be encountered.

Application Guidelines

Instructions

- In order to meet minimum wire bending space requirements and to ensure ease of installation, minimum enclosure space dimensions have been defined for each chassis. In order to ensure a proper fit, every panelboard to be renovated must be carefully surveyed prior to installation
- Determine the electrical requirements of the panelboard to be renovated (i.e., main breaker or main lugs, amperes, interrupting rating, circuit space, branch breakers, accessories)
- Using the electrical requirement data, select a base chassis and any required breakers, options and accessories
- This page provides the minimum dimensions of the enclosure, in which each base chassis may be installed. These dimensions assume that the chassis is mounted in the center of the existing box, both vertically and horizontally. Where site conditions require the chassis to be offset from this centrally mounted position, it is the installer's responsibility to ensure wire bending space and electrical clearance requirements are met. Installing chassis offset from the central position requires a custom offset trim. Contact your local Satellite for pricing and ordering details
- The table below provides a "Trim Door Size Code." Using this code, select a standard trim from the tables that will fit the outside dimensions of the existing box. Refer to **Page V2-T3-55** to define non-standard trim requirements

Minimum Enclosure Sizing

Ampere Rating	Number of Circuits	Main Device Type	Trim Door Size Code	Minimum Enclosure Dimensions—Inches (mm) Height	Width	Depth
Main Lug Only						
100	18	MLO	A	19.50 (495.3)	14.00 (355.6)	4.50 (114.3)
	30	MLO	B	26.50 (673.1)	14.00 (355.6)	4.50 (114.3)
	42	MLO	C	33.50 (850.9)	14.00 (355.6)	4.50 (114.3)
225	18	MLO	A	19.50 (495.3)	14.00 (355.6)	4.50 (114.3)
	30	MLO	B	26.50 (673.1)	14.00 (355.6)	4.50 (114.3)
	42	MLO	C	33.50 (850.9)	14.00 (355.6)	4.50 (114.3)
Main Breaker						
100	18	BAB, GHB	A	19.50 (495.3)	14.00 (355.6)	4.50 (114.3)
	30	BAB, GHB	B	26.50 (673.1)	14.00 (355.6)	4.50 (114.3)
	42	BAB, GHB	C	33.50 (850.9)	14.00 (355.6)	4.50 (114.3)
	18	EHD	B	30.00 (762.0)	14.00 (355.6)	4.50 (114.3)
	30	EHD	D	36.00 (914.4)	14.00 (355.6)	4.50 (114.3)
	42	EHD	E	42.00 (1066.8)	14.00 (355.6)	4.50 (114.3)
	18	QBHW	A	19.50 (195.3)	14.00 (355.6)	4.50 (114.3)
	30	QBHW	B	26.50 (673.1)	14.00 (355.6)	4.50 (114.3)
	42	QBHW	C	33.50 (850.9)	14.00 (355.6)	4.50 (114.3)
	18	ED, FD	B	30.00 (762.0)	14.00 (355.6)	4.50 (114.3)
	30	ED, FD	D	36.00 (914.4)	14.00 (355.6)	4.50 (114.3)
	42	ED, FD	E	42.00 (1066.8)	14.00 (355.6)	4.50 (114.3)
	18	EDH, HFD, FDC	B	30.00 (762.0)	14.00 (355.6)	4.50 (114.3)
	30	EDH, HFD, FDC	D	36.00 (914.4)	14.00 (355.6)	4.50 (114.3)
	42	EDH, HFD, FDC	E	42.00 (1066.8)	14.00 (355.6)	4.50 (114.3)
225	18	ED, FD	B	30.00 (762.0)	14.00 (355.6)	4.50 (114.3)
	30	ED, FD	D	36.00 (914.4)	14.00 (355.6)	4.50 (114.3)
	42	ED, FD	E	42.00 (1066.8)	14.00 (355.6)	4.50 (114.3)
	18	EDH, HFD, FDC	B	30.00 (762.0)	14.00 (355.6)	4.50 (114.3)
	30	EDH, HFD, FDC	D	36.00 (914.4)	14.00 (355.6)	4.50 (114.3)
	42	EDH, HFD, FDC	E	42.00 (1066.8)	14.00 (355.6)	4.50 (114.3)

Options and Accessories

Branch Circuit Breakers—P1R

Ampere Rating	Interrupting Rating (kA Sym.) 240 Vac ①	Breaker Type
15–60	10	BAB
70	10	BAB
80–100	10	BAB
15–30	10	BABRP ③
15–30	10	BABRSP ③
15–50 ②	10	QBGF ④
15–50 ②	10	QBGFEP ⑤
15–20	10	QBCAF ⑥
15–60	10	BAB-D ⑦
15–30	10	BAB-C ⑧
15–60	22	QBHW
70	22	QBHW
80–100	22	QBHW
15–30	22	QBHGF
15–30	22	QBHGFEP
15–20	22	QBHCAF ⑥
Provision	—	—

Branch Breakers—P2R

Ampere Rating	Interrupting Rating (kA Sym.) 480Y/277 Vac	Breaker Type Rating (kA Sym.)
15–20	14	GHQ
15–20	14	GHB
25–60	14	GHB
70–100	14	GHB
15–60	14	GHBGFEP ⑨
15–20	14	GHB-HID ⑩
15–30	25	HGHB
Provision	—	—

Copper Main Bus Adder

Main Bus Ampere Rating	Catalog Number
100	⑪
225	⑪

Copper Terminal Ground Bar for Copper Cable Only

Catalog Number
P1RGBC

Insulated/Isolated Ground Bus (Separately Mounted)

Aluminum Catalog Number	Copper Catalog Number
P1RGKA	**P1RNKC**

Neutral Kit (Separately Mounted) ⑫

Number of Termination Points	Aluminum Catalog Number	Copper Catalog Number
18	**P1RNKA18**	**P1RNKC18**
30	**P1RNKA30**	**P1RNKC30**
42	**P1RNKA42**	**P1RNKC42**

Depth Adder Kits ⑬

Standard Pow-R-Line 1R—Fits 4.50 to 6.00 inches
Standard Pow-R-Line 2R—Fits 4.75 to 6.00 inches

Accessory/Kits	For Use With Box Depth—Inches (mm)	Part Number
1.50 depth adder	6.00–7.50 (152.4–190.5)	**P1RDA15**
3.00 depth adder	7.50–9.00 (190.5–228.6)	**P1RDA30**
4.50 depth adder	9.00–10.50 (228.6–266.7)	**P1RDA45**
6.00 depth adder	10.50–12.00 (266.7–304.8)	**P1RDA60**

Box Collar Kits ⑭

Accessory/Kits	For Use With Box Depth—Inches (mm)	Part Number
Box collar	3.50–4.50 (88.9–114.3)	**P1RBC10**

Notes

① Single-pole breakers are rated 120 Vac maximum.
② 50A devices available as two-pole only.
③ Remote controllable circuit breaker.
④ GFCI for 5 mA personnel protection.
⑤ GFP for 30 mA equipment protection.
⑥ Arc fault circuit breaker.
⑦ HID (High Intensity Discharge) rated breaker.
⑧ Switching neutral breaker. Single-pole device requires two pole spaces; two-pole device requires three pole spaces.
⑨ GFP for 30 mA equipment protection. Requires two-pole spaces. 277 Vac only.
⑩ HID (High Intensity Discharge) rated breaker.
⑪ To convert base chassis catalog number from aluminum main bus to copper main bus, change the 6th digit of the aluminum base chassis catalog number to "C" (e.g., P1RL1A1-42 becomes P1RL1C1-42).
⑫ Each base chassis includes a neutral bar that contains one connection point for every circuit space available. Use this kit when additional connection points are required or the neutral must be separately mounted to meet existing cable locations.
⑬ Allows for panel to be used in boxes deeper than 6.00 inches.
⑭ Allows for panel to be used in boxes less than 4.50 inches.

Type PRL3a

Contents

Description	*Page*
Product Description	**V2-T3-7**
Application Description	**V2-T3-8**
Standards and Certifications	**V2-T3-10**
Technical Data and Specifications	**V2-T3-11**
Type PRL1a	**V2-T3-26**
Type PRL1aF	**V2-T3-30**
Type PRL1a-LX	**V2-T3-34**
Type PRL2a	**V2-T3-38**
Type PRL2aF	**V2-T3-42**
Type PRL2a-LX	**V2-T3-46**
Retrofit Panelboard	**V2-T3-50**
Type PRL3a	**V2-T3-58**
Product Selection	**V2-T3-59**
Box Sizing and Selection	**V2-T3-61**
Type PRL3E	**V2-T3-62**
Type PRL4	**V2-T3-66**
Type PRL4D	**V2-T3-76**
Type PRL5P	**V2-T3-86**

Type PRL3a

Product Description

- 600 Vac maximum (250 Vdc)
- Three-phase four-wire, three-phase three-wire, single-phase three-wire, single-phase two-wire
- 800A maximum main lugs
- 600A maximum main breaker
- 225A maximum branch breakers
- Bolt-on branch breakers
- Factory assembled
- Refer to **Page V2-T3-7** for additional information

Application Description

- Lighting panelboard or power distribution panelboard
- Fully rated or series rated
- Interrupting ratings up to 200 kA symmetrical
- Suitable for use as Service Entrance Equipment, when specified on the order
- See **Pages V2-T3-7** through **V2-T3-23** for additional information

Standards and Certifications

- UL 67, UL 50
- Federal Specification W-P-115c
- Refer to **Page V2-T3-7** for additional information

Listed

Product Selection

Type PRL3a

PRL3a

Ampere Rating	Interrupting Rating (kA Symmetrical) 240 Vac	480 Vac	600 Vac	250 Vdc	Breaker Type
Main Lug Only					
100	—	—	—	—	—
250	—	—	—	—	—
400	—	—	—	—	—
600	—	—	—	—	—
800 ①	—	—	—	—	—
Main Breaker					
100	18	14	—	10	EHD
100	18	14	14	10	FDB
100	22	—	—	—	EDB
100	42	—	—	—	EDS
100	65	—	—	—	ED
100	100	—	—	—	EDH
100	65	35	18	10	FD, FDE
100	100	65	25	22	HFD, HFDE
100	200	100	35	22	FDC
100	200	150	—	—	FCL
100	200	200	200	100 ②	FB-P ③
225	22	—	—	—	EDB
225	42	—	—	—	EDS
225	65	—	—	—	ED
225	100	—	—	—	EDH
225	200	—	—	—	EDC
225	65	35	18	10	FD, FDE
225	100	65	25	22	HFD, HFDE
225	200	100	35	22	FDC
250	65	35	18	10	JD
250	100	65	25	22	HJD
250	200	100	35	22	JDC
400	65	—	—	10	DK
400	65	35	25	10	KD
400	100	65	35	22	HKD
400	100	65	—	—	LHH
400	200	100	65	22	KDC
400	65	—	—	—	LCL ④
400	200	200	200	100 ②	LA-P ③④
600	65	35	18	22	LGE
600	100	65	35	22	LGH
600	200	100	50	42	LGC
600	65	35	25	22	LD
600	100	65	35	25	HLD
600	200	100	50	25	LDC
600	65	35	25	22	CLD ⑤
600	100	65	35	25	CHLD ⑤
600	200	100	50	25	CLDC ⑤

Notes

① 800A MLO requires 28-inch (711.2 mm) wide box.
② 100,000 based on NEMA test procedure.
③ Top feed only.
④ Requires 6.50-inch (165.1 mm) deep box. Not available in Type 3R, 12, 4 and 4X enclosures.
⑤ 100% rated circuit breaker. Requires copper bus. Not available in Type 12, 4 and 4X enclosures.

PRL3a Branch Circuit Breakers

Ampere Rating	Interrupting Rating (kA Symmetrical) 240 Vac	480 Vac	600 Vac	250 Vdc	Breaker Type
15–60	10 ②③	—	—	—	BAB
15–60	10	—	—	—	BAB-H
70	10 ②③	—	—	—	BAB
70	10	—	—	—	BAB-H
80–100	10 ②③	—	—	—	BAB
80–100	10	—	—	—	BAB-H
15–50 ①	10 ②③	—	—	—	QBGF
15–50 ①	10	—	—	—	QBGFEP
15–20	10 ②③	—	—	—	QBCAF ④
15–60	10 ②③	—	—	—	BAB-D ⑤
15–30	10 ②③	—	—	—	BAB-C ⑥
15–30	10 ②	—	—	—	BABRP ⑦
15–30	10 ②	—	—	—	BABRSP ⑦
15–60	22 ②③	—	—	—	QBHW
15–60	22	—	—	—	QBHW-H
70	22 ②③	—	—	—	QBHW
70	22	—	—	—	QBHW-H
80–100	22 ②③	—	—	—	QBHW
80–100	22	—	—	—	QBHW-H
15–30	22	—	—	—	QBHGF
15–30	22	—	—	—	QBHGFEP
15–20	22 ②③	—	—	—	QBHCAF ④
15–20	65	14 ⑧⑨	—	—	GHQ
15–20	65	14 ⑧⑨	—	14	GHB

PRL3a Branch Circuit Breakers, continued

Ampere Rating	Interrupting Rating (kA Symmetrical) 240 Vac	480 Vac	600 Vac	250 Vdc	Breaker Type
25–60	65	14 ⑧⑨	—	14	GHB
70–100	65	14 ⑧⑨	—	14	GHB
15–30	65	25 ⑧⑨	—	—	HGHB
15–20	65	14 ⑧⑨	—	14	GHQRSP ⑦
15–30	65	14 ⑧⑨	—	14	GHBS ⑦
15–60	—	14 ⑧⑨	—	—	GHBGFEP
15–20	—	14 ⑧⑨	—	—	GHBHID ⑤
15–60	18 ⑩	14 ⑧	—	10	EHD
70–100	18 ⑩	14 ⑧	—	10	EHD
15–60	18	V14	14	10	FDB
70–100	18	14	14	10	FDB
110–150	18	14	14	10	FDB
15–60	65 ⑩	35 ⑧	18	10	FD, FDE
70–100	65 ⑩	35 ⑧	18	10	FD, FDE
110–225	65 ⑩	35	18	10	FD ⑪, FDE
15–60	100 ⑩	65 ⑧	25	22	HFD, HFDE
70–100	100 ⑩	65 ⑧	25	22	HFD, HFDE
110–225	100 ⑩	65	25	22	HFD ⑪, HFDE
15–60	200	100	35	22	FDC
70–100	200	100	35	22	FDC
110–225	200	100	35	22	FDC ⑪
100–225	22	—	—	—	EDB ⑪
100–225	42	—	—	—	EDS ⑪
100–225	65	—	—	—	ED ⑪
100–225	100	—	—	—	EDH ⑪
100–225	200	—	—	—	EDC ⑪

Notes

① 50A devices are available as two-pole only.
② Single-pole breaker rated 120 Vac.
③ Two-pole breaker rated 120/240 Vac.
④ Arc fault circuit breaker.
⑤ HID (High Intensity Discharge) rated breaker.
⑥ Switching Neutral Breaker. single-pole device requires two-pole space, two-pole device requires three-pole space.
⑦ Solenoid operated breaker.
⑧ Single-pole breaker rated 277 Vac.
⑨ For use on 480Y/277V systems only.
⑩ AIC rating for two- and three-pole breakers only.
⑪ Maximum of six breakers per panel, 175–225A.

Box Sizing and Selection

Approximate Dimensions in Inches (mm)

Panel Layout Instructions

1. Select:
   a. Required mains (lugs or breaker).
   b. Neutral where required.
   c. Branch circuits as required.
2. Layout panel as shown below, using appropriate "X" dimensions.
3. Using total X units (panel height) find box height in inches (mm) and box catalog number from table below. (When total X units come out to an uneven number, use next highest number; i.e., if total X comes out 25X, use 31X.)

Layout—PRL3a

		Poles	
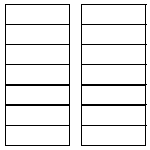		6 - 3X 12 - 5X 18 - 8X 24 - 10X 30 - 13X 36 - 15X 42 - 18X	BAB, QBHW, QBCAF, BABRP, BABRSP, QBHCAF GHQ, GHB, HGHB ①
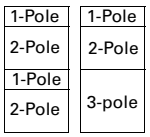		1X 2X 3X	EDB, EDS, ED, EDH, EDC, EHD, FDB, FD, FDE, HFD, FDC, HFDE 150A max. per branch breaker (300A max. per connector)
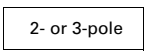		2X 2-Pole 3X three-pole	EDB, EDS, ED, EDH, EDC FD, HFD, FDC, ② FDE, HFDE
Neutral Section		5X	100–250A
		8X	400–800A
		11X	800A with through-feed lug
Main Lug Section		2X	100A
		5X	250A
		8X	400–600A
		14X	800A
Main Breaker Section	Horizontal Mounting	2X 2-Pole	EHD, FDB, FD, HFD, FDC, FDE, HFDE
		3X three-pole	EDB, EDS, ED, EDH, EDC ③
	Vertical Mounting	7X	EHD, FDB, FD, FDE, HFD, FDC, HFDE, EDB, EDS, ED, EDH, EDC ④
		9X	FCL, FB-P ⑤
		14X	JD, HJD, JDC
		15X	DK, KD, HKD, KDC, LHH
		17X	LD, HLD, LDC, CLD, CHLD, CLDC
		18X	LGE, LGH, LGC
		21X	LCL, LA-P ⑤⑥

Notes

① GHB, HGHB and GHQ breakers cannot be mixed on same connector as BAB, QBHW, BABRP and BABRSP.
② Maximum of six breakers per panel.
③ Horizontal mounted 15–150A main breakers EHD, FDB, FD, FDE, HFD, HFDE and FDC, will be furnished as branch breaker construction. Branch breakers single-, two- or three-pole as required, may be located opposite these main breakers.
④ If optional terminal kit 3TA225FDK is required, use 10X.
⑤ FB-P and LA-P top mounting only.
⑥ LCL or LA-P main breaker requires 6-1/2-inch (165.1 mm) deep box.

Layout Example

1. Description of Panel
   Type PRL3a three-phase, four-wire, 120/208 Vac flush mounting. Panel to have short-circuit rating of 22,000 symmetrical amperes. Main breaker 400A, three-pole, bottom mounting. Branch circuits bolt-on as follows:
   12–200A single-pole QBHW
   1–200A three-pole ED
   1–225A three-pole ED
2. Layout Information from **Layout—PRL3a** table (left):
   a. 400A Neutral . . . . . = 8X
   b. 12-poles of QBHW . . . . . = 5X
   c. Two three-pole ED breakers . . = 6X
   d. Main breaker, 400A,
      Three-pole DK . . . . . = 15X
      Total Height . . . . . = 34X
3. From **Box Tabulation—PRL3a** table (below):
   a. 34X Height (use 40X box)
   b. Box Height 72 inches (1828.8 mm)
   c. Box Catalog Number . . . . . **YS2072** or **EZB2072R**

Box Tabulation—PRL3a

"X" Units	Box Height	YS Box Catalog Number	LT Trim Catalog Number	EZ Box Catalog Number	EZ Trim Catalog Number
100–400A					
14X	36.00 (914.4)	**YS2036**	**LT2036S or F**	**EZB2036R**	**EZT2036S or F**
23X	48.00 (1219.2)	**YS2048**	**LT2048S or F**	**EZB2048R**	**EZT2048S or F**
31X	60.00 (1524.0)	**YS2060**	**LT2060S or F**	**EZB2060R**	**EZT2060S or F**
40X	72.00 (1524.0)	**YS2072**	**LT2072S or F**	**EZB2072R**	**EZT2072S or F**
53X	90.00 (2286.0)	**YS2090**	**LT2090S or F**	**EZB2090R**	**EZT2090S or F**
600A					
23X	48.00 (1219.2)	**YS2048**	**LTV2048S or F**	**EZB2048R**	**EZTV2048S or F**
31X	60.00 (1524.0)	**YS2060**	**LTV2060S or F**	**EZB2060R**	**EZTV2060S or F**
40X	72.00 (1524.0)	**YS2072**	**LTV2072S or F**	**EZB2072R**	**EZTV2072S or F**
53X	90.00 (2286.0)	**YS2090**	**LTV2090S or F**	**EZB2090R**	**EZTV2090S or F**
800A					
23X	48.00 (1219.2)	**YS2848**	**LTV2848S or F**	—	—
31X	60.00 (1524.0)	**YS2860**	**LTV2860S or F**	—	—
40X	72.00 (1524.0)	**YS2872**	**LTV2872S or F**	—	—
53X	90.00 (2286.0)	**YS2890**	**LTV2890S or F**	—	—

Cabinets

Fronts are code-gauge steel, ANSI-61 light gray painted finish.

Boxes are code-gauge galvanized steel without knockouts. Standard depth is 5-3/4 inches (146.1 mm).

Standard widths are:
20-inch (508.0 mm)
100–600A.
28-inch (711.2 mm)
800A.

Standard Depth

5-3/4 inches (146.1 mm).

Top and Bottom Gutters

5-1/2 inches (139.7 mm) minimum.

Side Gutters

4 inches (101.6 mm) minimum.

Type PRL3E

Contents

Description	*Page*
Product Description	**V2-T3-7**
Application Description	**V2-T3-8**
Standards and Certifications	**V2-T3-10**
Technical Data and Specifications	**V2-T3-11**
Type PRL1a	**V2-T3-26**
Type PRL1aF	**V2-T3-30**
Type PRL1a-LX	**V2-T3-34**
Type PRL2a	**V2-T3-38**
Type PRL2aF	**V2-T3-42**
Type PRL2a-LX	**V2-T3-46**
Retrofit Panelboard	**V2-T3-50**
Type PRL3a	**V2-T3-58**
Type PRL3E	**V2-T3-62**
Product Selection	**V2-T3-63**
Box Sizing and Selection	**V2-T3-64**
Type PRL4	**V2-T3-66**
Type PRL4D	**V2-T3-76**
Type PRL5P	**V2-T3-86**

Type PRL3E

Product Description

- 480V Vac maximum (250 Vdc)
- Three-phase four-wire, three-phase three-wire, single-phase three-wire, single-phase two-wire
- 600A main lugs
- 600A main breaker
- 125A maximum branch breakers
- Bolt-on branch breakers
- Factory assembled
- Refer to **Page V2-T3-7** for additional information

Application Description

- Lighting and appliance branch panelboard
- Fully rated or series rated
- Interrupting ratings up to 200 kA symmetrical
- Suitable for use as Service Entrance Equipment, when specified on the order
- See **Pages V2-T3-7** through **V2-T3-23** for additional information

Standards and Certifications

- UL 67, UL 50
- Federal Specification W-P-115c
- Refer to **Page V2-T3-7** for additional information

Listed

Product Selection

Type PRL3E

PRL3E

Ampere Rating	Breaker Type	Interrupting Rating (kA Symmetrical) 240 Vac	480 Vac	250 Vdc
Main Lug Only				
100	—	—	—	—
250	—	—	—	—
400	—	—	—	—
600	—	—	—	—
Main Breaker				
125	EGB	35	18	10
125	EGS	100	35	35
125	EGH	200	65	42
225	EDB	22	—	—
225	EDS	42	—	—
225	ED	65	—	—
225	EDH	100	—	—
225	EDC	200	—	—
225	FD, FDE	65	35	10
225	HFD, HFDE	100	65	22
225	FDC	200	100	22
400	DK	65	—	—
400	KD	65	35	10
400	HKD	100	65	22
400	LHH	100	65	—
400	KDC	200	100	22
600	LGE	65	35	22
600	LGH	100	65	22

Box Sizing and Selection

Approximate Dimensions in Inches (mm)

Assembled Circuit Breaker Panelboards and Lighting Controls

Box size and box and trim catalog numbers for all standard panelboard types are found on **Page V2-T3-65**.

Instructions

1. Using description of the required panelboard, select the rating and type of main required.
2. Count the total number of branch circuit poles, including provisions, required in the panelboard. Do not count main breaker poles. Convert two- or three-pole branch breaker to single-poles, i.e., three-pole breaker, count as three poles. Determine sub-feed breaker or through-feed lug requirements.
3. Select the main ampere rating section from **Page V2-T3-65**.
4. Select panelboard type from first column, main breaker frame, if applicable, from second column, and sub-feed breaker frame, if applicable, from the third column.
5. From Step #2, determine the number of branch circuits in Column 4.
6. Read box size, box and trim catalog numbers across columns to the right. Specify surface or flush mounting on the order.

Cabinets

Fronts are code-gauge steel, ANSI-61 light gray painted finish.

Boxes are code-gauge galvanized steel without knockouts. Standard depth is 5-3/4 inches (146.1 mm). Standard width is 20 inches (508.0 mm). An optional 28-inch (711.2 mm) wide box is available.

Top and Bottom Gutters

5-1/2 inches (139.7 mm) minimum.

Approximate Dimensions in Inches (mm)

PRL3E Panelboard Sizing

Panelboard Types	Main Breaker Types and Mounting Position (H) = Horizontal (V) = Vertical	Sub-Feed Breaker Types and Mounting Position (H) = Horizontal (V) = Vertical	Maximum No. of Branch Circuits Including Provisions	Box Dimensions ① Height	Width	Depth	YS Box Catalog Number	LT Trim Catalog Number	EZ Box Catalog Number	EZ Trim Catalog Number
125A										
Main breaker	EG, EGS, EGH (H)	—	12	36.00 (914.4)	20.00 (508.0)	5.75 (146.1)	**YS2036**	**LT2036S or F**	**EZB2036R**	**EZT2036S or F**
		—	24	36.00 (914.4)	20.00 (508.0)	5.75 (146.1)	**YS2036**	**LT2036S or F**	**EZB2036R**	**EZT2036S or F**
		—	36	36.00 (914.4)	20.00 (508.0)	5.75 (146.1)	**YS2036**	**LT2036S or F**	**EZB2036R**	**EZT2036S or F**
		—	42	42.00 (1066.8)	20.00 (508.0)	5.75 (146.1)	**YS2042**	**LT2042S or F**	**EZB2042R**	**EZT2042S or F**
Main lugs or main breaker	FD, HFD (V)	—	18	36.00 (914.4)	20.00 (508.0)	5.75 (146.1)	**YS2036**	**LT2036S or F**	**EZB2036R**	**EZT2036S or F**
		—	30	42.00 (1066.8)	20.00 (508.0)	5.75 (146.1)	**YS2042**	**LT2042S or F**	**EZB2042R**	**EZT2042S or F**
		—	42	48.00 (1219.2)	20.00 (508.0)	5.75 (146.1)	**YS2048**	**LT2048S or F**	**EZB2048R**	**EZT2048S or F**
Main lugs or main breaker with 125A through-feed lugs or sub-feed breaker	FD HFD (V)	EHD FD HFD TFL (V)	18	48.00 (1219.2)	20.00 (508.0)	5.75 (146.1)	**YS2048**	**LT2048S or F**	**EZB2048R**	**EZT2048S or F**
			30	60.00 (1524.0)	20.00 (508.0)	5.75 (146.1)	**YS2060**	**LT2060S or F**	**EZB2060R**	**EZT2060S or F**
			42	60.00 (1524.0)	20.00 (508.0)	5.75 (146.1)	**YS2060**	**LT2060S or F**	**EZB2060R**	**EZT2060S or F**
250A										
Main lugs or main breaker	EDS, ED, EDH, FD, HFD (V)	—	18	36.00 (914.4)	20.00 (508.0)	5.75 (146.1)	**YS2036**	**LT2036S or F**	**EZB2036R**	**EZT2036S or F**
		—	30	42.00 (1066.8)	20.00 (508.0)	5.75 (146.1)	**YS2042**	**LT2042S or F**	**EZB2042R**	**EZT2042S or F**
		—	42	48.00 (1219.2)	20.00 (508.0)	5.75 (146.1)	**YS2048**	**LT2048S or F**	**EZB2048R**	**EZT2048S or F**
Main lugs or main breaker with 225A through-feed lugs or sub-feed breaker	FD, HFD, EDS, ED, EDH (V)	FD, HFD, EDS, ED, EDH (V)	18	48.00 (1219.2)	20.00 (508.0)	5.75 (146.1)	**YS2048**	**LT2048S or F**	**EZB2048R**	**EZT2048S or F**
			30	60.00 (1524.0)	20.00 (508.0)	5.75 (146.1)	**YS2060**	**LT2060S or F**	**EZB2060R**	**EZT2060S or F**
			42	60.00 (1524.0)	20.00 (508.0)	5.75 (146.1)	**YS2060**	**LT2060S or F**	**EZB2060R**	**EZT2060S or F**
400A										
Main breaker	DK, KD, HKD, KDC (V)	—	18	48.00 (1219.2)	20.00 (508.0)	5.75 (146.1)	**YS2048**	**LT2048S or F**	**EZB2048R**	**EZT2048S or F**
		—	30	60.00 (1524.0)	20.00 (508.0)	5.75 (146.1)	**YS2060**	**LT2060S or F**	**EZB2060R**	**EZT2060S or F**
		—	42	60.00 (1524.0)	20.00 (508.0)	5.75 (146.1)	**YS2060**	**LT2060S or F**	**EZB2060R**	**EZT2060S or F**
Main breaker with 225A through-feed lugs or sub-feed breaker	DK, KD, HKD, KDC (V)	EHD, FD, HFD, EDB, EDS, ED, EDH (V)	18	60.00 (1524.0)	20.00 (508.0)	5.75 (146.1)	**YS2060**	**LT2060S or F**	**EZB2060R**	**EZT2060S or F**
			30	72.00 (1828.8)	20.00 (508.0)	5.75 (146.1)	**YS2072**	**LT2072S or F**	**EZB2072R**	**EZT2072S or F**
			42	72.00 (1828.8)	20.00 (508.0)	5.75 (146.1)	**YS2072**	**LT2072S or F**	**EZB2072R**	**EZT2072S or F**
Main lugs or main breaker with 400A through-feed lugs or sub-feed breaker	DK, KD, HKD, KDC (V)	JD, HJD, JDC, DK, KD, HKD, KDC (V)	18	72.00 (1828.8)	20.00 (508.0)	5.75 (146.1)	**YS2072**	**LT2072S or F**	**EZB2072R**	**EZT2072S or F**
			30	72.00 (1828.8)	20.00 (508.0)	5.75 (146.1)	**YS2072**	**LT2072S or F**	**EZB2072R**	**EZT2072S or F**
			42	90.00 (2286.0)	20.00 (508.0)	5.75 (146.1)	**YS2090**	**LT2090S or F**	**EZB2090R**	**EZT2090S or F**

PRL3E Branch Circuit Breakers

Ampere Rating	Interrupting Rating (kA Symmetrical) 240 Vac	480 Vac	250 Vdc	Breaker Type
15–125	25	18	10	EGB
15–125	85	35	35	EGS
15–125	100	65	42	EGH

Note

① Smaller panelboard box sizes are available if required. Contact Eaton for application information.

Type PRL4

Type PRL4B Circuit Breaker and Type PRL4F Fusible Panelboards

Contents

Description	*Page*
Product Description	**V2-T3-7**
Application Description	**V2-T3-8**
Standards and Certifications	**V2-T3-10**
Technical Data and Specifications	**V2-T3-11**
Type PRL1a	**V2-T3-26**
Type PRL1aF	**V2-T3-30**
Type PRL1a-LX	**V2-T3-34**
Type PRL2a	**V2-T3-38**
Type PRL2aF	**V2-T3-42**
Type PRL2a-LX	**V2-T3-46**
Retrofit Panelboard	**V2-T3-50**
Type PRL3a	**V2-T3-58**
Type PRL3E	**V2-T3-62**
Type PRL4	
Product Selection	**V2-T3-67**
Box Sizing and Selection—PRL4B	**V2-T3-70**
Box Sizing and Selection—PRL4F	**V2-T3-73**
Type PRL4D	**V2-T3-76**
Type PRL5P	**V2-T3-86**

Type PRL4

Product Description

- 600 Vac maximum (600 Vdc)
- Three-phase, four-wire, three-phase three-wire, single-phase three-wire, single-phase two-wire
- PRL4B circuit breaker panelboard
- PRL4F fusible switch panelboard
- 1200A maximum mains
- 1200A maximum branch devices
- Bolt-on branch devices
- Factory assembled
- Refer to **Page V2-T3-7** for additional information

Application Description

- Power distribution panelboard
- Fully rated or series rated
- Interrupting ratings up to 200 kA symmetrical
- Suitable for use as Service Entrance Equipment, when specified on the order
- See **Pages V2-T3-7** through **V2-T3-23** for additional information

Standards and Certifications

- UL 67, UL 50
- Federal Specification
- W-P-115c
- Refer to **Page V2-T3-7** for additional information

Listed

Product Selection

Type PRL4

PRL4 Main Lugs and Main Breakers

Ampere Rating	Interrupting Rating (kA Symmetrical) 240 Vac	480 Vac	600 Vac	250 Vdc	600 Vdc	Breaker Type
Main Lug Only						
250	—	—	—	—	—	—
400	—	—	—	—	—	—
600	—	—	—	—	—	—
800	—	—	—	—	—	—
1200	—	—	—	—	—	—
Main Breaker ①						
250	65	35	18	10	—	JD
250	100	65	25	22	—	HJD
250	—	—	—	42	35	HJDDC ②
250	200	100	35	22	—	JDC
250	200	200	—	—	—	LCL
400	65	—	—	10	—	DK
400	65	35	25	10	—	KD
400	65	35	25	—	—	CKD ③④
400	100	65	35	22	—	HKD
400	—	—	—	42	35	HKDDC ②
400	100	65	35	42	—	LHH
400	100	65	35	—	—	CHKD ③④
400	200	100	65	22	—	KDC
400	200	200	—	—	—	LCL
400	200	200	200	—	—	LA-P
600	65	35	18	22	—	LGE ①
600	100	65	35	22	—	LGH ①
600	200	100	50	42	—	LGC
600	200	150	65	50	—	LGU
600	65	35	25	22	—	LD
600	65	35	25	—	—	CLD ③
600	100	65	35	25	—	HLD
600	—	—	—	42	35	HLDDC ②
600	100	65	35	—	—	CHLD ③
600	200	100	50	25	—	LDC
600	200	100	50	—	—	CLDC ③
800	65	50	25	22	—	MDL
800	100	65	35	25	—	HMDL
800	—	—	—	42	35	HMDLDC ②
800	65	50	25	—	—	CMDL ③
800	100	65	35	—	—	CHMDL ③
800	200	200	200	—	—	NB-P
800	65	50	25	—	—	ND
800	100	65	35	—	—	HND
800	200	100	65	—	—	NDC
800	65	50	25	—	—	CND ③⑤
800	100	65	35	—	—	CHND ③⑤
800	200	100	65	—	—	CNDC ③⑤
1200	65	50	25	—	—	ND
1200	100	65	35	—	—	HND
1200	200	100	65	—	—	NDC
1200	65	50	25	—	—	CND ③⑤
1200	100	65	35	—	—	CHND ③⑤
1200	200	100	65	—	—	CNDC ③⑤
1200	—	—	—	42	50	NBDC ②

PRL4 Main Fusible Switches

Ampere Rating	Interrupting Rating (kA Symmetrical) 240 Vac	480 Vac	Device Type
Main Fusible Switch 240 Vac, 250 Vdc ⑥⑦⑧			
200	See **Page V2-T3-69**		FDPB
400			FDPW
600 ⑨			FDPW
800 ⑨			FDPW
1200 ⑨			FDPW
Main Fusible Switch 600 Vac ⑥⑦			
200	See **Page V2-T3-69**		FDPB
400			FDPW
600 ⑨			FDPW
800 ⑨			FDPW
1200 ⑨			FDPW

Notes

① For ground fault protection on main devices, see **Modification 14—Applies to 310 and 310+ Trip Units on Page V2-T3-102** or **Modification 15 on Page V2-T3-102**.
② For use on DC systems only.
③ 100% rated breaker. Requires copper bus. Not available in Type 12, 4 and 4X enclosures.
④ Breaker only available in three-pole frame.
⑤ Requires 44-inch (1117.6 mm) wide box.
⑥ For ground fault protection on main devices, see **Modification 15 on Page V2-T3-102**.
⑦ Fuses not included. **Specify required fuse clips on all switches.**
⑧ Class J Fuse provisions are applicable only to 600V units. When required, use dimensions of 600V units for all voltages 600 and below.
⑨ No DC rating on 600, 800 and 1200A switches

PRL4 Branch Devices

Ampere Rating	Interrupting Rating (kA Symmetrical) 240 Vac	480 Vac	600 Vac	250 Vdc	600 Vdc	Breaker Type
15–60	10 ②③	—	—	—	—	BAB
15–60	10	—	—	—	—	BAB-H
70–100	10 ②③	—	—	—	—	BAB
70–100	10	—	—	—	—	BAB-H
15–50 ①	10 ②③	—	—	—	—	QBGF
15–20	10 ②③	—	—	—	—	QBCAF ④
15–60	22 ②③	—	—	—	—	QBHW
15–60	22	—	—	—	—	QBHW-H
70–100	22 ②③	—	—	—	—	QBHW
70–100	22	—	—	—	—	QBHW-H
15–30	22 ②③	—	—	—	—	QBHGF
15–20	22 ②③	—	—	—	—	QBHCAF ④
15–20	65 ②	14 ⑤	—	—	—	GHQ ⑦
15–60	65 ②	14 ⑤	—	14	—	GHB ⑦
70–100	65 ②	14 ⑤	—	14	—	GHB ⑦
15–30	65 ②	25 ⑤	—	—	—	HGHB ⑦
15–60	18 ⑧	14 ⑤	—	10	—	EHD
70–100	18 ⑧	14 ⑤	—	10	—	EHD
15–60	18	14	14	10	—	FDB
70–100	18	14	14	10	—	FDB
110–150	18	14	14	10	—	FDB
15–60	65 ⑧	35 ⑤	18	10	—	FD, FDE
70–100	65 ⑧	35 ⑤	18	10	—	FD, FDE
110–225	65 ⑧	35	18	10	—	FD, FDE
15–60	100 ⑧	65 ⑤	25	22	—	HFD, HFDE
70–100	100 ⑧	65 ⑤	25	22	—	HFD, HFDE
110–225	100 ⑧	65	25	22	—	HFD, HFDE
15–60	200	100	35	22	—	FDC
70–100	200	100	35	22	—	FDC
110–225	200	100	35	22	—	FDC
15–100	200	150	—	—	—	FCL
15–150	—	—	—	42	35	HFDDC ⑥
100–225	22	—	—	—	—	EDB
100–225	42	—	—	—	—	EDS
100–225	65	—	—	—	—	ED
100–225	100	—	—	—	—	EDH
100–225	200	—	—	—	—	EDC
70–225	65	35	18	10	—	JD
250	65	35	18	10	—	JD
70–225	100	65	25	22	—	HJD

PRL4 Branch Devices, continued

Ampere Rating	Interrupting Rating (kA Symmetrical) 240 Vac	480 Vac	600 Vac	250 Vdc	600 Vdc	Breaker Type
250	100	65	25	22	—	HJD
70–250	—	—	—	42	35	HJDDC ⑥
70–225	200	100	35	22	—	JDC
250	200	100	35	22	—	JDC
125–250	200	200	—	—	—	LCL
250–400	65	—	—	10	—	DK
100–400	65	35	25	10	—	KD
100–400	65	35	25	—	—	CKD ⑨⑩⑪
100–400	100	65	35	22	—	HKD
100–400	—	—	—	42	35	HKDDC ⑥
100–400	100	65	35	—	—	CHKD ⑨⑩⑪
125–400	100	65	35	42	—	LHH
100–400	200	100	65	22	—	KDC
200–400	200	200	—	—	—	LCL
250–600	65	35	18	22	—	LGE
300–600	65	35	25	22	—	LD
300–600	65	35	25	—	—	CLD ⑨
250–600	100	65	35	22	—	LGH
300–600	100	65	35	25	—	HLD
300–600	—	—	—	42	35	HLDDC ⑥
300–600	100	65	35	—	—	CHLD ①
250–600	200	100	35	42	—	LGC
300–600	200	100	50	25	—	LDC
300–600	200	100	50	25	—	CLDC ①
250–600	200	150	65	50	—	LGU
400–800	65	50	25	22	—	MDL
400–800	100	65	35	25	—	HMDL
300–800	—	—	—	42	35	HMDLDC ⑥
400–800	65	50	25	—	—	CMDL ①
400–800	100	65	35	—	—	CHMDL ①
400–800	65	50	25	—	—	ND
400–800	100	65	35	—	—	HND
400–800	200	100	65	—	—	NDC
400–800	65	50	25	—	—	CND ①②
400–800	100	65	35	—	—	CHND ①②
400–800	200	100	65	—	—	CNDC ①②
600–1200	65	50	25	—	—	ND
600–1200	100	65	35	—	—	HND
600–1200	200	100	65	—	—	NDC
600–1200	65	50	25	—	—	CND ①②
600–1200	100	65	35	—	—	CHND ①②
600–1200	200	100	65	—	—	CNDC ①②
700–1200	—	—	—	42	50	NBDC ⑥

Notes

① 50A devices are available as two-pole only.
② Single-pole breakers rated 120 Vac.
③ Two-pole breakers rated 120/240 Vac.
④ Arc fault circuit breaker.
⑤ Single-pole breakers rated 277 Vac.
⑥ For use on DC systems only.
⑦ At 480V, must be used on 480Y/277V grounded wye systems only.
⑧ AIC rating for two- and three-pole breakers only.
⑨ 100% rated breaker. Requires copper bus. Not available in Type 12, 4 and 4X enclosures.
⑩ Breaker only available in three-pole frame.
⑪ Available in single branch mounting only.

PRL4 Branch Devices, continued

Ampere Rating	Interrupting Rating (kA Symmetrical) 240 Vac	480 Vac	600 Vac	250 Vdc	Breaker Type
Integrally Fused, Current Limiting Circuit Breaker					
15–100	200	200	200	①	FB-P
125–225	200	200	200	①	LA-P
250–400	200	200	200	①	LA-P
400–600	200	200	200	①	NB-P
700–800	200	200	200	①	NB-P
Fusible Switches 240 Vac, 250 Vdc ②					
30/30 ③	See table at the right				FDPW-Twin
60/60 ③					FDPW-Twin
100/100 ③					FDPW-Twin
200/200					FDPB-Twin
100					FDPW-Single
200					FDPB-Single
400	See table at the right				FDPW-Single
600 ④					FDPW-Single
800 ④					FDPW-Single
1200 ④					FDPW-Single
Fusible Switches 600 Vac ②					
30/30 ③	See table at the right				FDPW-Twin
60/60 ③					FDPW-Twin
100/100 ③					FDPW-Twin
200/200 ⑤					FDPB-Twin
100					FDPW-Single
200					FDPB-Single
400	See table at the right				FDPW-Single
600 ④					FDPW-Single
800 ④					FDPW-Single
1200 ④					FDPW-Single

FDPW and FDPB Switch Ratings, 240 or 600 Vac

Ampere Rating	Fuse Class Used	Short-Circuit Ratings (kA Symmetrical)
30–100	R, J ⑤	200
200 Single	R, J ⑤	200
200 Twin	R ⑥, J ⑤, T	200
400, 600 ⑦	R ⑦, J ⑤, T	200
800, 1200 ⑦	L	200

Notes

① 100 kAIC based on NEMA test procedure.

② Fuses not included. **Specify required fuse clips on all switches. (T fuse clips not available for 200/200 twin switches.)**

③ When branches of a twin unit are of different ampere ratings, as a 30–60 twin unit, price and layout as a 60–60 twin unit; when a 60–100 twin unit, price and layout as a 100–100 twin unit.

④ No DC rating on 600, 800 and 1200A switches.

⑤ Class J fuse provisions are applicable to 600V units. When required, use price and dimensions of 600V units for all voltages 600V and below.

⑥ Twin 200A switches are not available with Class R fuse clips at 600V.

⑦ When shunt trip is required, 400–600A switches used with Class R fuses are rated 100 kAIC.

Box Sizing and Selection—PRL4B

Approximate Dimensions in Inches (mm)

Main Lug Only (MLO), Main Breaker, Neutral, Through-Feed Lug (TFL) and Sub-Feed Lug (SFL) "X" Space Requirements. (For other configurations not shown, refer to Eaton.)

* = Space available for branch devices. For device sizing, see **Page V2-T3-72**.

● = Blank means no bus under cover, to meet NEC cable bending space.

PRL4B Layout

Standard Main Lug, Through-Feed and Sub-Feed Lugs ① (500 kcmil Maximum)

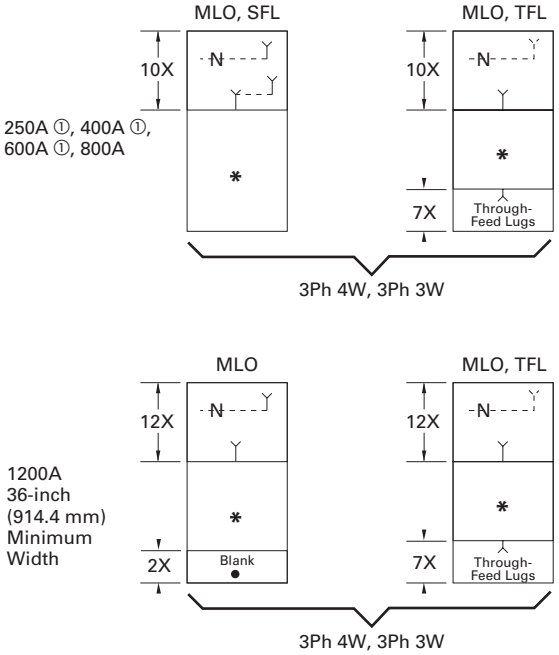

Main Breaker with Neutral (when required) (500 kcmil Maximum)

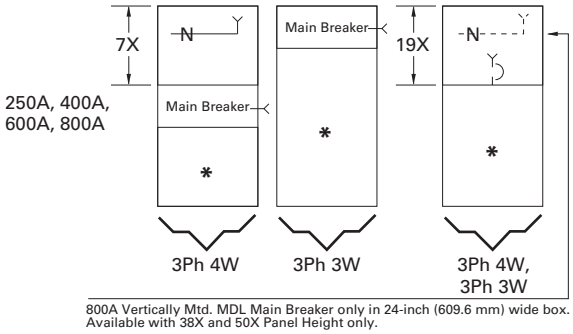

Optional Main Lugs, Through-Feed and Sub-Feed Lugs ① (750 kcmil Maximum)

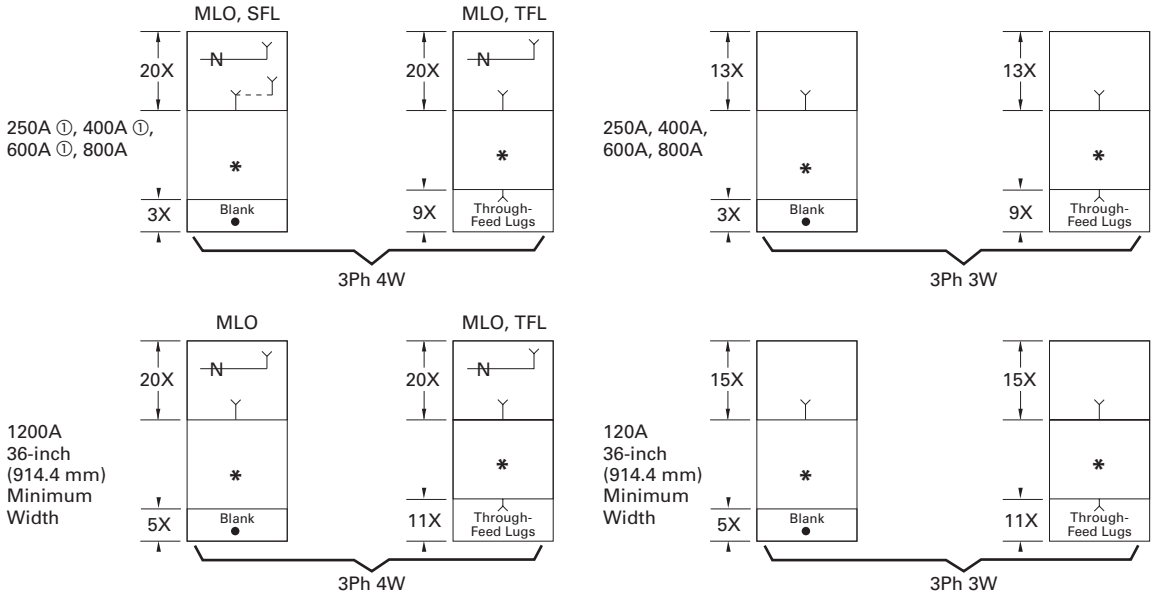

Note

① Sub-feed lugs are available 250–600A. For 600A, use 1200A "A" space.

Approximate Dimensions in Inches (mm)

Panel Layout and Dimensions

To determine the dimensions of a given panelboard enclosure, make a layout sketch by fitting together the main, branch and lug modules according to the appropriate tables in the layout guide. Assign "X" units to each module as shown and obtain a total "X" number.

The height of the enclosure is related to the total "X" units in the layout as shown in table on right. Three standard box heights are available to accommodate any and all layout arrangements. "X" unit totals that do not exactly match those in table on right must be rounded off to the next highest standard (26X, 38X, 50X).

If a calculated "X" total for a panel exceeds 50X, the panel must be split into two or more separate sections with "X" space for through-feed lugs figured in for all but one section. If a neutral is required, a separate neutral bar and appropriate "X" space must be included in each section.

Layout Example

- 1–PRL4B panelboard, 480Y/277 volt, three-phase four-wire 65 kA, 800A, main lug, consisting of:
  - 12–20A/single-pole HFD
  - 2–250A/three-pole HJD
  - 1–400A/three-pole HKD

Reference PRL4B Layout Example

1. From layout guide, total "X" height of panel = 26X, (which is a design standard and no rounding off is necessary).
2. From table on right, enclosure height for 26X panel = 57 inches (1447.8 mm).
3. Width = 24 inches (609.6 mm)—directly from layout guide.
4. Enclosure depth = 11.31 inches (287.0 mm) —standard for all PRL4 panelboards.

PRL4B Layout Example

20A/1P	20A/1P	1X
20A/1P	20A/1P	1X
20A/1P	20A/1P	1X
20A/1P	20A/1P	1X
20A/1P	20A/1P	1X
20A/1P	20A/1P	1X
250A/3P		3X
250A/3P		3X
400A/3P		4X
Main Lugs 800A Neutral		10X

Total = 26X

Box Dimensions—PRL4B

"X" Units	Catalog Number	Height	Width	Depth ①
26X	**BX2457**	57.00 (1447.8)	24.00 (609.6)	11.31 (287.0)
38X	**BX2473**	73.50 (1866.9)	24.00 (609.6)	11.31 (287.0)
50X	**BX2490**	90.00 (2286.0)	24.00 (609.6)	11.31 (287.0)
38X	**BX3673**	73.50 (1866.9)	36.00 (914.4)	11.31 (287.0)
50X	**BX3690**	90.00 (2286.0)	36.00 (914.4)	11.31 (287.0)
38X	**BX4473**	73.50 (1866.9)	44.00 (1117.6)	11.31 (287.0)
50X	**BX4490**	90.00 (2286.0)	44.00 (1117.6)	11.31 (287.0)

Top and Bottom Gutters

10.63-inch (269.9 mm) minimum.

Side Gutters—Minimum

24.00-inch (609.6 mm) wide box—5.00-inch (127.0 mm).
36.00-inch (914.4 mm) wide box—6.00-inch (152.4 mm).
44.00-inch (1117.6 mm) wide box—8.00-inch (203.2 mm).

Notes

① Box depth is 10.40 inches (264.2 mm), cover adds 0.90 inches (22.9 mm) to depth.

800A maximum bus size in 24.00-inch (609.6 mm) wide box. Flush trims not available on PRL4B panels.

Layout for Branch and Horizontally Mounted Main Devices Layout—PRL4B

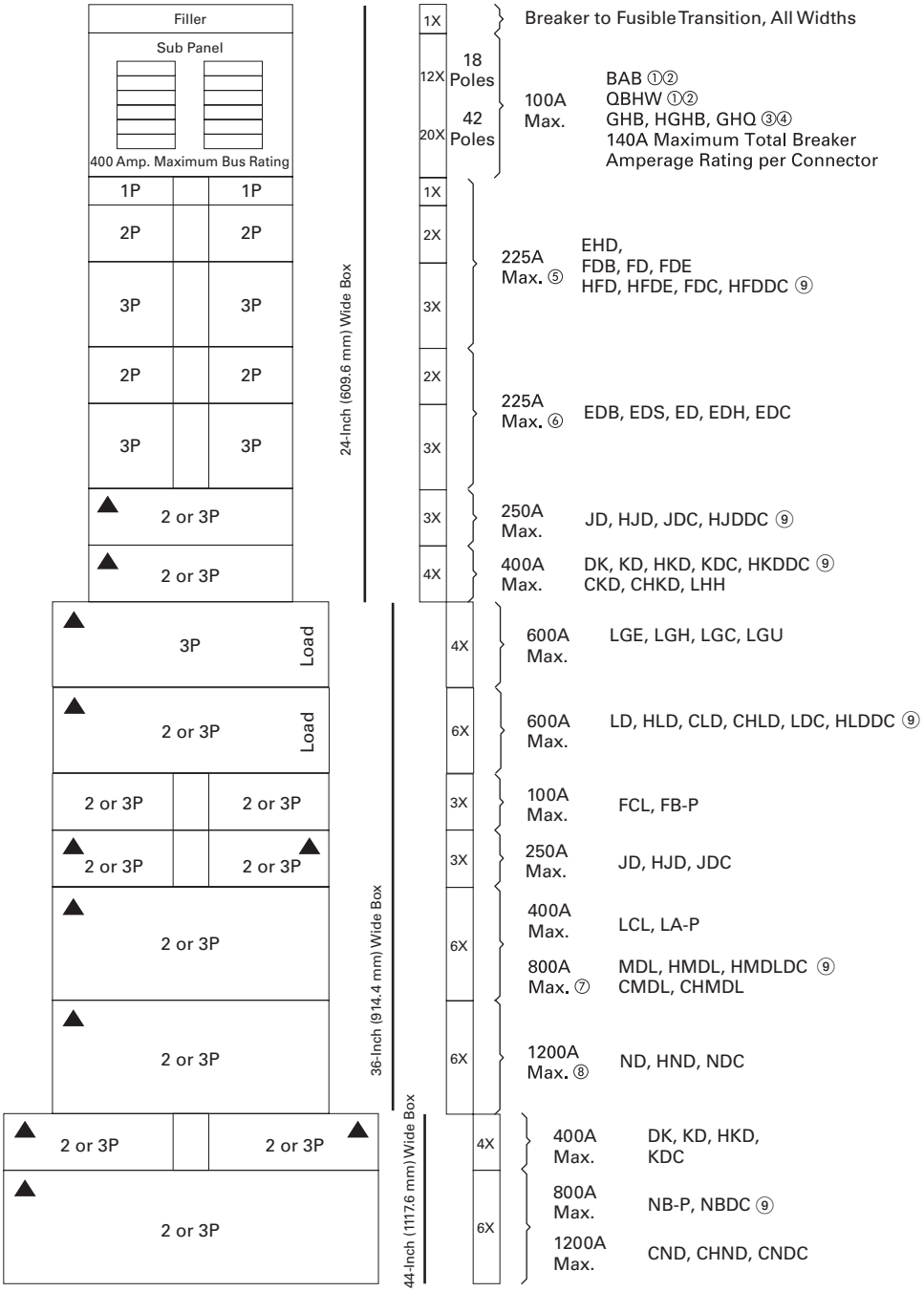

Notes

① BAB and QBHW breakers with shunt trips require one additional pole space, i.e., single-pole is two-pole size, two-pole is three-pole size, and three-pole is four-pole size.
② If panel contains only BAB or QBHW branch breakers, use a PRL1a panelboard.
③ GHB, HGHB or GHQ breakers cannot be mixed on same subchassis as BAB, QBHW.
④ If panel contains only GHB, HGHB or GHQ branch breakers, use a PRL2a panelboard.
⑤ When only one single-pole breaker of the group is required on either side of chassis, the single-pole breaker space required changes from 1X to 2X.
⑥ Minimum 36-inch (914.4 mm) wide box is required if optional #6–300 kcmil lug is required.
⑦ MDL main breaker in 24-inch (609.6 mm) wide box, refer to **Page V2-T3-70**.
⑧ Optional 750 kcmil terminal requires 44-inch (1117.6 mm) wide box.
⑨ For use on DC systems only.

See **Page V2-T3-70** for MLO or Neutral and Vertically Mounted Mains space requirements.

Box Sizing and Selection—PRL4F

Approximate Dimensions in Inches (mm)

Main Lug (MLO), Main Switch, Neutral, Through-Feed (TFL) and Sub-Feed Lug (SFL) "X" Space Requirements. (For other configurations not shown, refer to Eaton.)

* = Space available for branch devices. For device sizing, see **Page V2-T3-75**.

● = Blank means no bus under cover, to meet NEC cable bending space.

PRL4F Layout

Standard Main Lug, Through-Feed and Sub-Feed Lugs ① (500 kcmil Maximum)

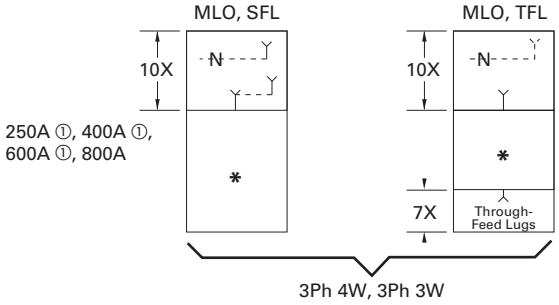

Main Switch with Neutral (when required) (500 kcmil Maximum)

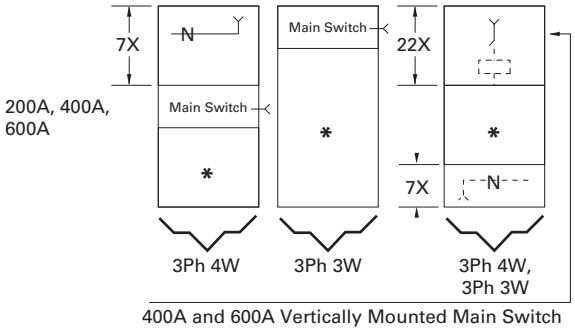

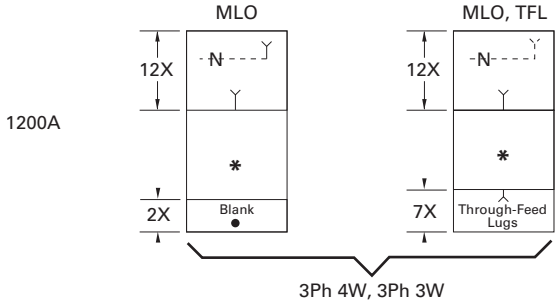

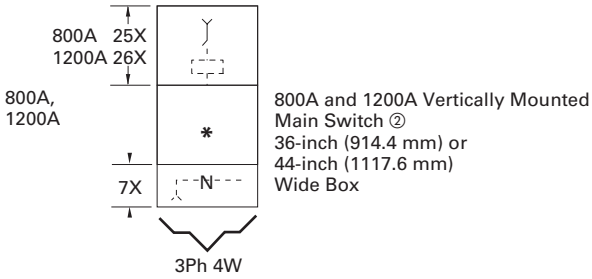

Optional Main Lugs, Through-Feed and Sub-Feed Lugs ① (750 kcmil Maximum)

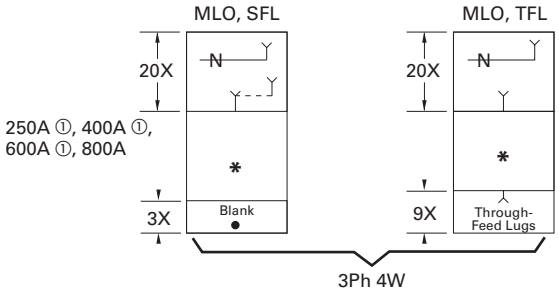

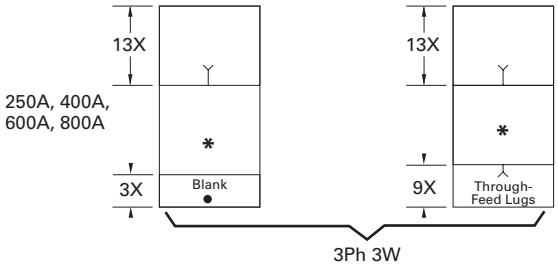

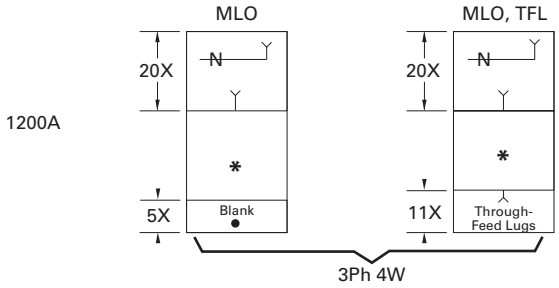

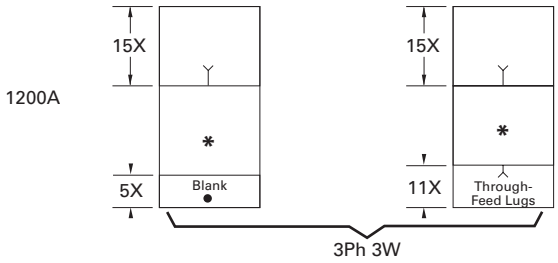

Notes

① Sub-feed lugs are available 250–600A. For 600A, use 1200A "A" space.

② 800A and 1200A mains available only in vertical mounting.

Approximate Dimensions in Inches (mm)

Panel Layout and Dimensions

To determine the dimensions of a given panelboard enclosure, make a layout sketch by fitting together the main, branch and lug modules according to the appropriate tables in the layout guide. Assign "X" units to each module as shown and obtain a total "X" number.

The height of the enclosure is related to the total "X" units in the layout as shown in table on right. Three standard box heights are available to accommodate any and all layout arrangements. "X" unit totals that do not exactly match those in table on right must be rounded off to the next higher standard (38X, 50X).

If a calculated "X" total for a panel exceeds 50X, the panel must be split into two or more separate sections with "X" space for through-feed lugs figured in for all but one section. If a neutral is required, a separate neutral bar and appropriate "X" space must be included in each section.

Layout Example

- PRL4F, three-phase four-wire, 208Y/120 volt complete with 400A main switch and the following branches:
  - One 200A/three-pole
  - Two 100A/three-pole
  - Two 30A/three-pole

Panel to have short-circuit rating of 100 kA symmetrical.

Reference PRL4F Layout Example

1. From layout guide, total "X" height of panel = 43X.
2. Rounded off to next higher standard = 50X.
3. From table on right, enclosure height for 50X panel = 90 inches (2286.0 mm).
4. Width = 36 inches (914.4 mm).
5. Enclosure depth is standard for all PRL4 panelboards = 11.31 inches (287.0 mm).

Type PRL4F Layout Example

400A Neutral		7X
30A/3P	30A/3P	4X
100A/3P	100A/3P	4X
200A/3P		6X
400A three-pole Main Switch (Vertical Mounted)		22X
	Total =	43X

Box Dimensions—PRL4F

"X" Units	Catalog Number	Height	Width	Depth ①
38X	**BX3673**	73.50 (1866.9)	36.00 (914.4)	11.31 (287.0)
50X	**BX3690**	90.00 (2286.0)	36.00 (914.4)	11.31 (287.0)
38X	**BX4473**	73.50 (1866.9)	44.00 (1117.6)	11.31 (287.0)
50X	**BX4490**	90.00 (2286.0)	44.00 (1117.6)	11.31 (287.0)

Top and Bottom Gutters

10.63 inches (269.9 mm) minimum.

Side Gutters—Minimum

- 36-inch (914.4 mm) wide box:
  - 8-inch (203.2 mm)—200A maximum
  - 6-inch (152.4 mm)—400–1200A maximum
- 44-inch (1117.6 mm) wide box:
  - 10-inch (254.0 mm)—200A maximum
  - 8-inch (203.2 mm)—400–1200A

Notes

① Box depth is 10.40-inch (264.2 mm), cover adds 0.90-inch (22.8 mm) to depth.

Flush trims not available on PRL4F panels.

Layout for Branch and Horizontally Mounted Main Device—PRL4F

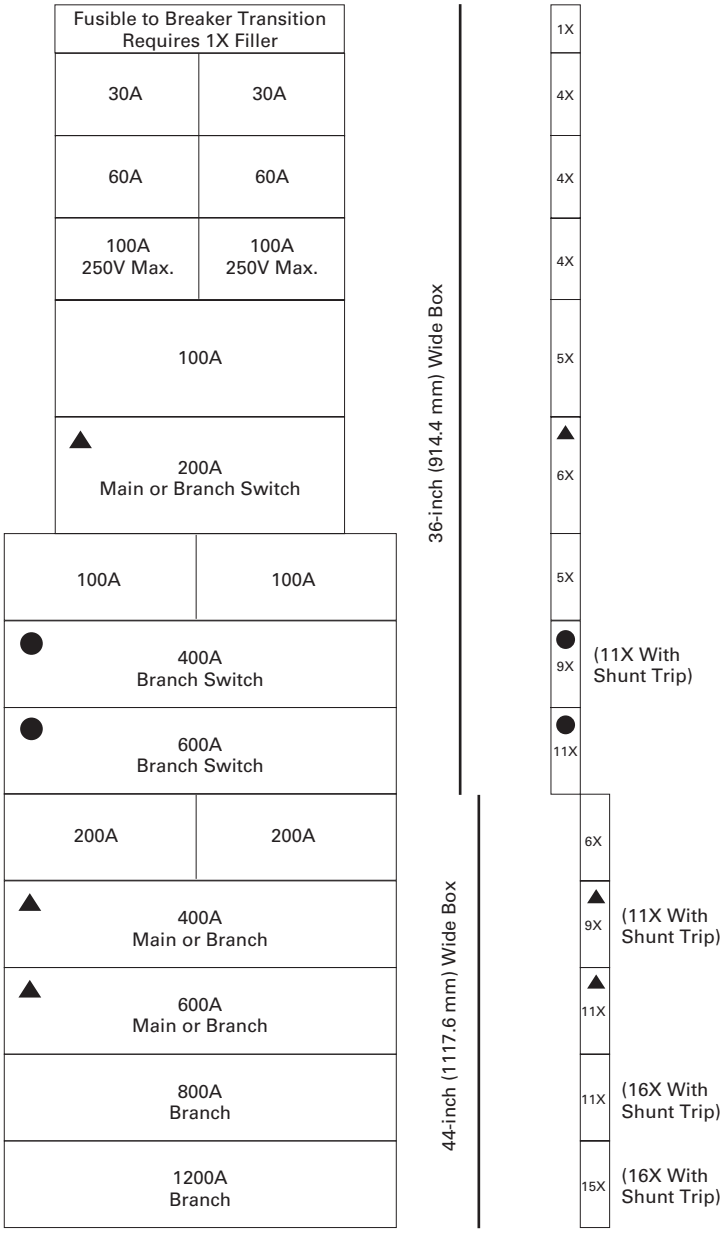

▲ Fusible switch may be used as horizontally main.

● 400 and 600A horizontally mounted feeder switches in 36-inch (914.4 mm) or 44-inch (1117.6 mm) wide box. 400 and 600A horizontally mounted main switches only in 44-inch (1117.6 mm) wide box. For vertically mounted main, see **Page V2-T3-73** for sizing.

Note: See **Page V2-T3-73** for MLO or Neutral and Vertically Mounted Main space requirements.

Type PRL4D

Type PRL4D Drawout Molded Case Circuit Breaker Power Panelboard

Contents

Description	*Page*
Product Description	**V2-T3-7**
Application Description	**V2-T3-8**
Standards and Certifications	**V2-T3-10**
Technical Data and Specifications	**V2-T3-11**
Type PRL1a	**V2-T3-26**
Type PRL1aF	**V2-T3-30**
Type PRL1a-LX	**V2-T3-34**
Type PRL2a	**V2-T3-38**
Type PRL2aF	**V2-T3-42**
Type PRL2a-LX	**V2-T3-46**
Retrofit Panelboard	**V2-T3-50**
Type PRL3a	**V2-T3-58**
Type PRL3E	**V2-T3-62**
Type PRL4	**V2-T3-66**
Type PRL4D	
Product Selection	**V2-T3-77**
Box Sizing and Selection—PRL4D	**V2-T3-80**
Accessories and Modifications	**V2-T3-83**
Type PRL5P	**V2-T3-86**

Type PRL4D

Product Description

- Drawout molded case circuit breaker power panelboard
- Front accessible
- Front connected
- Through-the-door design drawout mechanism
- Visual indication of breaker status and position
- Large grab handles for easy removal
- 600 Vac maximum
- 1200A maximum mains
- 600A maximum drawout molded case feeder breakers

Application Description

- Interrupting ratings up to 200 kAIC symmetrical
- Feeder power panelboard
- Rated as Service Entrance Equipment when appropriately equipped
- Ideal for:
  - Data centers
  - Industrial facilities
  - Process equipment manufacturing
  - Anywhere that requires quick change of feeder devices is needed

Benefits

- Ease of maintenance
- Faster to remove and install
- Less downtime

Standards and Certifications

- UL 67 Listed chassis
- UL 50 Listed box and trim

Listed

Product Selection

Type PRL4D

PRL4D Main Lugs and Main Breakers

Ampere Rating	Interrupting Rating (kA Symmetrical) 240 Vac	480 Vac	600 Vac	Breaker Type	"X" Space
Main Lugs Only (Fixed-Mounted Only)					
400	—	—	—	—	10X
600	—	—	—	—	10X
800	—	—	—	—	10X
1200	—	—	—	—	12X
Main Circuit Breaker (Drawout Only) ①					
600	65	35	18	LGE	9X
600	100	65	35	LGH	9X
600	200	100	50	LGC	9X
Main Circuit Breaker (Fixed-Mounted Only) ①					
600	65	35	18	LGE	4X
600	100	65	35	LGH	4X
600	200	100	50	LGC	4X
600	65	35	25	CLD ②	6X
600	100	65	35	CHLD ②	6X
600	200	100	50	CLDC ②	6X
800	65	50	25	MDL	6X
800	100	65	35	HMDL	6X
800	65	50	25	CMDL ②	6X
800	100	65	35	CHMDL ②	6X
1200	85	50	25	NGS	6X
1200	100	65	35	NGH	6X
1200	200	100	65	NGC	6X
1200	65	50	25	CND ②	6X
1200	100	65	35	CHND ②	6X
1200	200	100	65	CNDC ②	6X

Notes

① For ground fault protection on main devices, see Modification 10—applies to 310 and 310+ trip units only.
② 100% rated circuit breaker.

PRL4D Drawout Branch/Feeder Breakers

Type PRL4D

Single Mount Two-Pole and Three-Pole

Ampere Rating	Interrupting Rating (kA Symmetrical) 240 Vac	480 Vac	600 Vac	Breaker Type	"X" Space
Single-Mount Breakers with Thermal-Magnetic Trip Units					
70–250	85	35	18	JGS	7X
70–250	100	65	25	JGH	7X
70–250	200	100	35	JGC	7X
250–600	85	35	18	LGS	9X
250–600	100	65	35	LGH	9X
250–600	200	100	50	LGC	9X
Single-Mount Breakers with Electronic 310+ Trip Units (Three-Pole Only)					
20–50	85	35	18	JGS	7X
20–50	100	65	25	JGH	7X
20–50	200	100	35	JGC	7X
40–100	85	35	18	JGS	7X
40–100	100	65	25	JGH	7X
40–100	200	100	35	JGC	7X
80–150	85	35	18	JGS	7X
80–150	100	65	25	JGH	7X
80–150	200	100	35	JGC	7X
100–250	85	35	18	JGS	7X
100–250	100	65	25	JGH	7X
100–250	200	100	35	JGC	7X
100–250	85	35	18	LGS	9X
100–250	100	65	35	LGH	9X
100–250	200	100	50	LGC	9X
200–400	85	35	18	LGS	9X
200–400	100	65	35	LGH	9X
200–400	200	100	50	LGC	9X
250–600	85	35	18	LGS	9X
250–600	100	65	35	LGH	9X
250–600	200	100	50	LGC	9X
Provision for Future (Includes Factory-Installed Base Cassette)					
20–250	Any JG family branch/feeder breaker				7X
100–600	Any LG family branch/feeder breaker				9X

For Dual/Twin feeder breakers, select any two breakers within the same "Breaker Type."

Type PRL4D

Dual/Twin Mount Two-Pole and Three-Pole

Ampere Rating	Interrupting Rating (kA Symmetrical) 240 Vac	480 Vac	600 Vac	Breaker Type	"X" Space
Dual-/Twin-Mount Breakers with Thermal-Magnetic Trip Units					
70–250	85	35	18	JGS	7X
70–250	100	65	25	JGH	7X
70–250	200	100	35	JGC	7X
Dual-/Twin-Mount Breakers with Electronic 310+ Trip Units (Three-Pole Only)					
20–50	85	35	18	JGS	7X
20–50	100	65	25	JGH	7X
20–50	200	100	35	JGC	7X
40–100	85	35	18	JGS	7X
40–100	100	65	25	JGH	7X
40–100	200	100	35	JGC	7X
80–150	85	35	18	JGS	7X
80–150	100	65	25	JGH	7X
80–150	200	100	35	JGC	7X
100–250	85	35	18	JGS	7X
100–250	100	65	25	JGH	7X
100–250	200	100	35	JGC	7X
Provision for Future (Includes Factory-Installed Base Cassette)					
20–250	Any JG Family Branch/Feeder Breaker				7X
100–600	Any LG Family Branch/Feeder Breaker				9X

Box Sizing and Selection—PRL4D

Approximate Dimensions in Inches (mm)

Main Lug Only (MLO), Main Breaker, Neutral, Through-Feed Lug (TFL) and Sub-Feed Lug (SFL) "X" Space Requirements. (For other configurations not shown, refer to Eaton.)

* = Space available for branch devices. For device sizing, see **Page V2-T3-82**.

● = Blank means no bus under cover, to meet NEC cable bending space.

PRL4D Layout

Standard Main Lug, Through-Feed and Sub-Feed Lugs ① (500 kcmil Maximum)

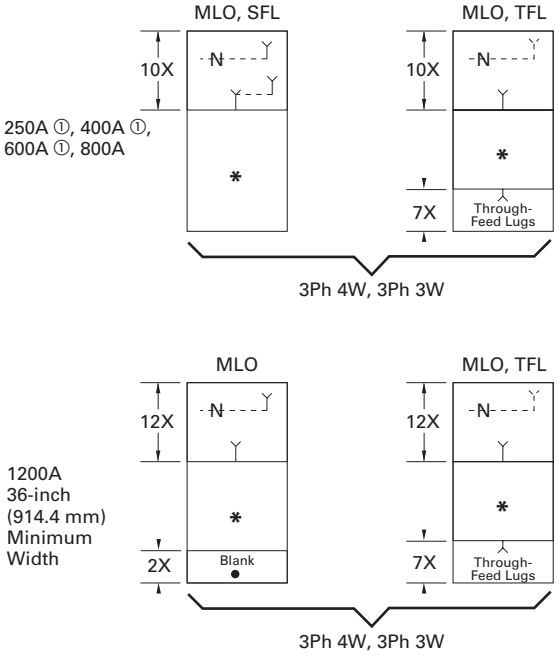

Main Breaker with Neutral (when required) (500 kcmil Maximum)

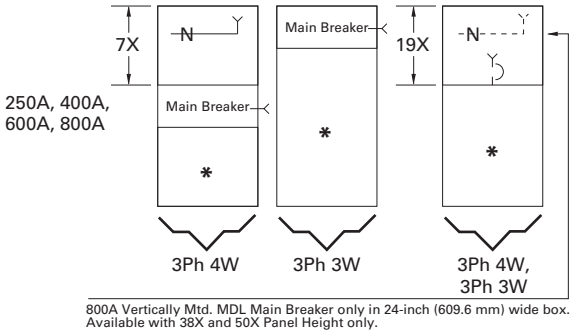

Optional Main Lugs, Through-Feed and Sub-Feed Lugs ① (750 kcmil Maximum)

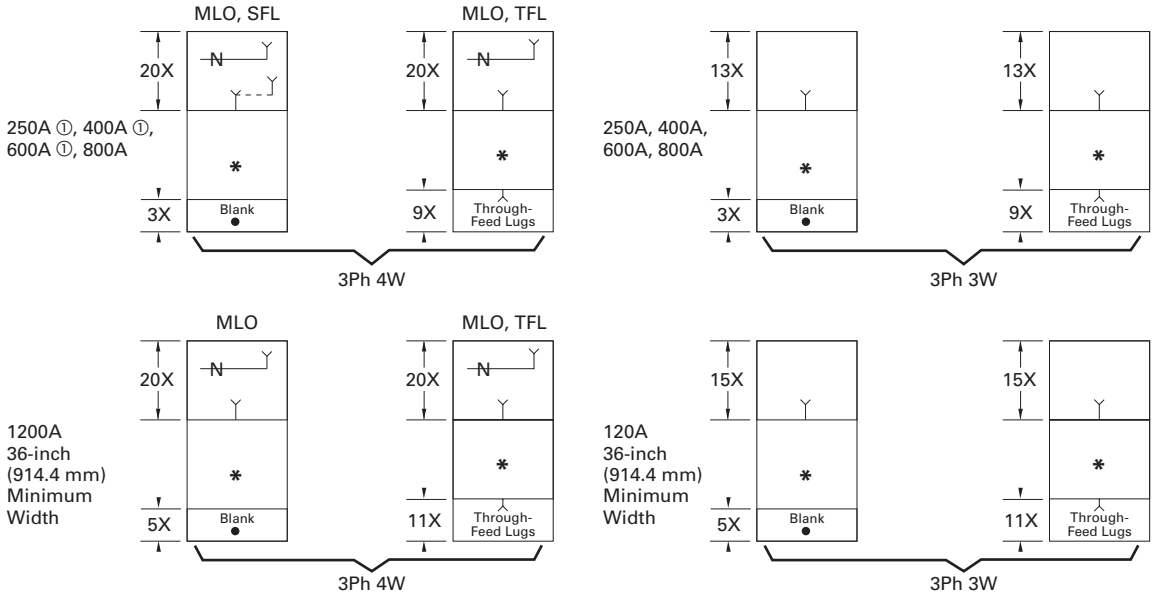

Note

① Sub-feed lugs are available 250–600A. For 600A, use 1200A "A" space.

Approximate Dimensions in Inches (mm)

Panel Layout and Dimensions

To determine the dimensions of a given panelboard enclosure, make a layout sketch by fitting together the main, branch and lug modules according to the appropriate tables in the layout guide. Assign "X" units to each module as shown and obtain a total "X" number.

The height of the enclosure is related to the total "X" units in the layout as shown in table on right. Three standard box heights are available to accommodate any and all layout arrangements. "X" unit totals that do not exactly match those in table on right must be rounded off to the next higher standard (38X, 50X).

If a calculated "X" total for a panel exceeds 50X, the panel must be split into two or more separate sections with "X" space for through-feed lugs figured in for all but one section. If a neutral is required, a separate neutral bar and appropriate "X" space must be included in each section.

Layout Example

- One PRL4D panelboard, 480Y/277 Vac, three-phase, four-wire, 65 kA, 800A main lugs only with:
  - One JGS 200A/ three-pole
  - One LGS 400A/ three-pole
  - One JGS 150A/ three-pole dual mount
  - One JGS 100A/ three-pole dual mount

Reference PRL4D Layout Example

1. From layout guide, total "X" height of panel = 33X.
2. From table on right, 33X must use minimum 38X dimensions. Minimum box height is 73.50 inches (1866.9 mm).
3. From the layout for branch and main devices, find minimum box width requirements for mains and branch/feeder devices.

- JGS single minimum width: 36 inches
- LGS single minimum width: 36 inches
- JGS dual minimum width: 44 inches

As the JGS duals require a minimum of a 44-inch-wide box, the minimum box width is 44 inches.

4. From PRL4D Layout Example, the correct minimum box selection is BX4473, which is 73.50 inches H x 44.00 inches W x 11.31 inches D (1866.9 mm H x1117.6 mm W x 287.0 mm D).

Box Dimensions—PRL4D

"X" Units	Catalog Number	Height	Width	Depth ①
38X	**BX3673**	73.50 (1866.9)	36.00 (914.4)	11.31 (287.0)
50X	**BX3690**	90.00 (2286.0)	36.00 (914.4)	11.31 (287.0)
38X	**BX4473**	73.50 (1866.9)	44.00 (1117.6)	11.31 (287.0)
50X	**BX4490**	90.00 (2286.0)	44.00 (1117.6)	11.31 (287.0)

Top and Bottom Gutters

10.63 inches (269.9 mm) minimum.

Side Gutters—Minimum

- 36-inch (914.4 mm) wide box: 6-inch (152.4 mm)
- 44-inch (1117.6 mm) wide box: 8-inch (203.2 mm)

Type PRL4D Layout Example

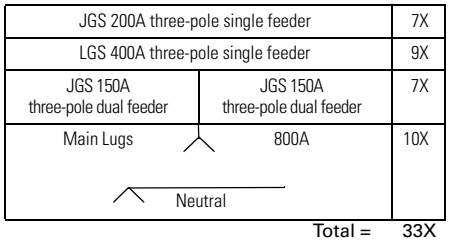

Notes

① Box depth is 10.40-inch (264.2 mm), cover adds 0.90-inch (22.8 mm) to depth.

Flush trims not available on PRL4D panels.

Door-to-door option not available on PRL4D panels.

Layout for Branch and Horizontally Mounted Main Devices—PRL4D

Instructions

Determine box size by locating all main and feeder devices in your panel. The width of box is determined by the maximum box size shown for each device. For main lugs, through-feed lugs and sub-feed lugs, refer to **Page V2-T3-80**.

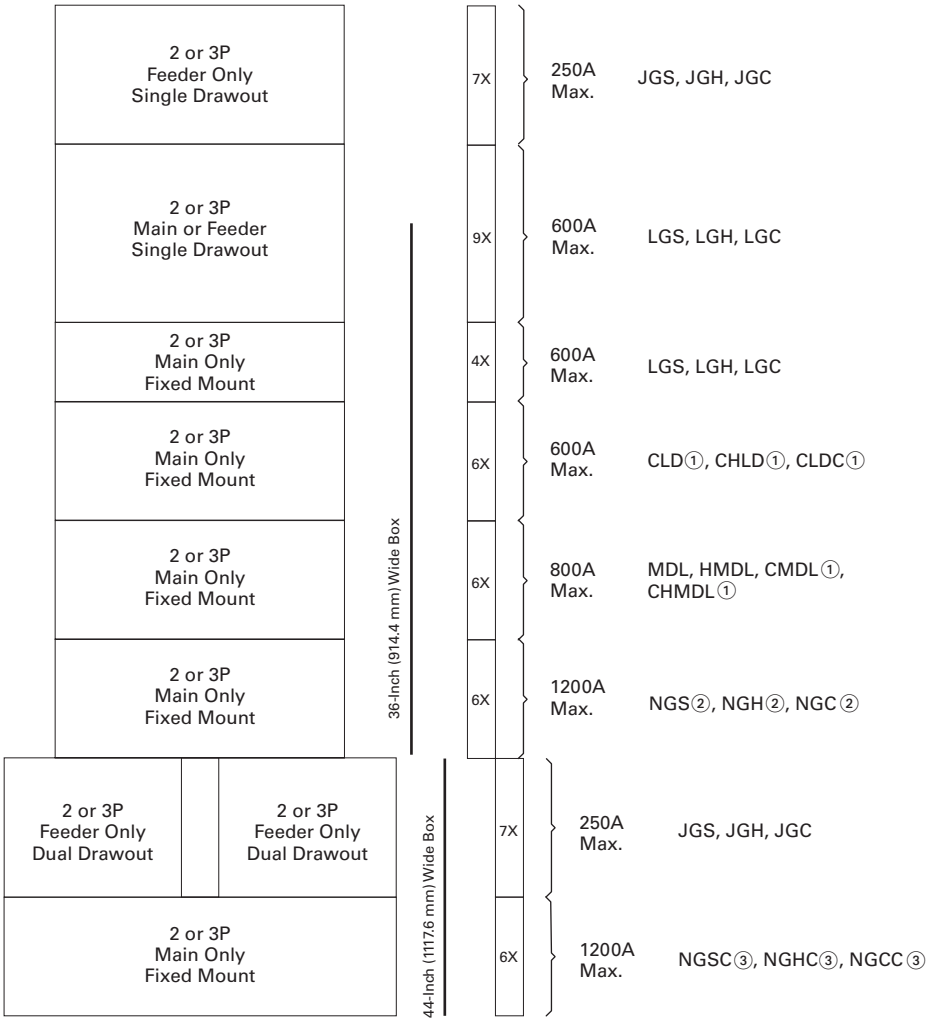

Notes

① 100% rated breaker.
② Optional 750 kcmil terminal requires 44-inch (1117.6 mm) wide box.
③ Contact Eaton for availability.

Accessories and Modifications

PRL4D Modifications

Modification	Item Number
Ambient compensating breakers	1
Breaker accessories—internal	2
Complete assembly	3
Compression type lugs	4
Conduit covers	5
Copper lugs/terminals	6
Copper main bus	7
Density rated bus	8
Directory frame—metal	9
Electronic trip units	10
Ground bars	11
Ground fault protection	12
Infrared (IR) viewing windows	13
Handle lock-off device	14
Nameplates	15
Permanent circuit numbers	16
Seismically qualified	17
Service entrance equipment rated	18
Shunt trips	19
Sub-feed lugs	20
Surge protective devices	21
Through-feed lugs	22
Touchup paint	23

1. Ambient Compensating Breakers

For ambient compensating breakers (where available) in lieu of standard breakers, add 10% to panelboard branch breaker and to main breaker list prices, if required. (Not UL Listed.)

2. Breaker Accessories—Internal (Only One Accessory Per Position)

Accessories

Breaker Type	Device Mounting	Internal Breaker Accessory
JG family	Drawout ①	Auxiliary switch 1A-1B
JG family	Drawout ①	Auxiliary switch 2A-2B
JG family	Drawout ①	Bell alarm
JG family	Drawout ①	High load alarm w/trip
JG family	Drawout ①	Ground fault alarm w/trip
JG family	Drawout ②	Undervoltage release
JG family	Drawout ②	Zone selective interlock
LG family	Drawout ①	Auxiliary switch 1A-1B
LG family	Drawout ①	Auxiliary switch 2A-2B
LG family	Drawout ①	Bell alarm
LG family	Drawout ①	High load alarm w/trip
LG family	Drawout ①	Ground fault alarm w/trip
LG family	Drawout ②	Undervoltage release ③
LG family	Drawout ②	Zone selective interlock
LG family	Fixed	Auxiliary switch 1A-1B
LG family	Fixed	Auxiliary switch 2A-2B
LG family	Fixed	Bell alarm
LG family	Fixed	High load alarm w/trip
LG family	Fixed	Ground fault alarm w/trip
LG family	Fixed	Undervoltage release ③
LG family	Fixed	Zone selective interlock
MDL family	Fixed	Auxiliary switch 1A-1B
MDL family	Fixed	Auxiliary switch 2A-2B
MDL family	Fixed	Auxiliary switch 1A-1B w/alarm
MDL family	Fixed	Auxiliary switch 2A-2B w/alarm
NG family	Fixed	Auxiliary switch 1A-1B
NG family	Fixed	Auxiliary switch 2A-2B
NG family	Fixed	Bell alarm
NG family	Fixed	High load alarm w/trip
NG family	Fixed	Ground fault alarm w/trip
NG family	Fixed	Undervoltage release ③
NG family	Fixed	Zone selective interlock

Notes

① Accessories wired to a pull-apart terminal block. Right position only.
② Accessories wired to a pull-apart terminal block. Left position only.
③ Not available when breaker is equipped with ARMS trip unit.

3. Complete Assembly

Complete assembly of panelboard box, interior and trim prior to shipment, when requested on order.

4. Compression Main Lugs

Al/Cu Burndy Range Taking Type.

Modification 4

Main Lug Amperes	PRL4D Lug Wire Range
800	(3) 500–750 kcmil
1200	(4) #2–600 kcmil (4) 500–750 kcmil

5. Conduit Covers

Fabricated sheet metal to cover open conduits above and/or below standard Type 1 box.

Modification 5

Description
Conduit enclosing shield—open back
Conduit enclosing shield—solid back

6. Copper Lugs/Terminals

Optional copper mechanical main lugs only and includes main incoming neutral lug.

Modification 6

Main Lug Amperes	PRL4D Lug Wire Range
600	(2) 1/0–600 kcmil
800	(2) 1/0–600 kcmil
1200	(3) 1/0–600 kcmil

7. Copper Main Busbars

Optional copper busbars are available in all ampere ratings.

Modification 7

Ampere Range	Bare Copper Chassis Bus	Silver-Plated Copper Bus
600		
800		
1000		
1200		

8. Density Rated Bus

Standard main bus ampere rating is determined by UL listed temperature rise testing. Density rated bus is defined at 750A per square inch for aluminum bus and 1000A per square inch for copper bus. Adder for aluminum density rated bus is in addition to the base price. Adder for copper density rated bus is in addition to the base price plus the appropriate adder for copper bus. See Modification 7.

Modification 8

Ampere Rating
Aluminum—750A per Square Inch
600
800
1000
1200
Copper—1000A per Square Inch
600
800
1000
1200

9. Directory Frame—Metal

Metal directory frame in lieu of standard non-metallic pocket directory holder.

Modification 9

Directory Frame Type
Metal frame, plastic cover

10. Electronic Trip Units

Thermal-magnetic trip units are standard. For electronic trip units, select appropriate breaker from the electronic trip section of **Pages V2-T3-78 and V2-T3-79**. See selection below for electronic trip units.

Modification 10

Breaker Frame Family	Trip Unit Type
Drawout Feeder JGS, JGH, JGC	Digitrip 310+ LS Digitrip 310+ LSI Digitrip 310+ LSG Digitrip 310+ LSIG
Drawout Feeder or Main LGS, LGH, LGC	Digitrip 310+ LS Digitrip 310+ LSI Digitrip 310+ LSG Digitrip 310+ LSIG

The following electronic trip units integrate Eaton's Arcflash Reduction Maintenance System within the trip unit.

Breaker Frame Family	Trip Unit Type
Drawout Feeder or Main LGS, LGH, LGC	Digitrip 310+ ALSI Digitrip 310+ ALSIG

Electronic Trip Units for Fixed-Mounted Mains Only.

Breaker Frame Family	Trip Unit Type	Trip Unit Functionality ①
LGS, LGH, LGC	Digitrip 310+ Digitrip 310+ Digitrip 310+ Digitrip 310+ Digitrip 310+ Digitrip 310+	LS LSI LSG LSIG ALSI ② ALSIG ②
CLD, CHLD, CLDC	Digitrip 310 Digitrip 310 Digitrip 310 Digitrip 310	LS LSI LSG LSIG
MDL, HMDL, CMDL, CHMDL	Digitrip 310 Digitrip 310 Digitrip 310 Digitrip 310	LS LSI LSG LSIG
NGS, NGH, NGC	Digitrip 310+ ③ Digitrip 310+ ③ Digitrip 310+ ③ Digitrip 310+ ③ Digitrip 310+ ③ Digitrip 310+ ③	LS LSI LSG LSIG ALSI ② ALSIG ②
CND, CHND, CNDC	Digitrip 310 ④ Digitrip 310 ④ Digitrip 310 ④ Digitrip 310 ④	LS LSI LSG LSIG

11. Ground Bars

Modification 11

Description	Bar Type
Aluminum bar for aluminum and copper conductors	Standard, attached to box Insulated/isolated ground bar
Copper bar for use with copper only conductors	Standard, attached to box Insulated/isolated bar

Notes

① L = Adjustable long delay pickup
S = Adjustable short delay pickup w/fixed short delay
I = Adjustable instantaneous pickup
G = Adjustable ground fault pickup
A = Arcflash Reduction Maintenance System

② Trip unit includes Arcflash Reduction Maintenance System.

③ Digitrip 310+ is standard for the NGS, NGH and NGC.

④ Digitrip 310 is standard for CND, CHND and CNDC.

12. Ground Fault Protection

Refer to Modification 10 for ground fault trip units.

13. Infrared (IR) Viewing Windows

Infrared viewing windows for main devices and drawout single-mounted feeder devices.

Modification 13

Overcurrent Device	IR Window Manufacturer
All fixed mount mains	Iriss Hawk (Fluke)
Single drawout feeder breakers ①	Iriss Hawk (Fluke)

14. Handle Lock-Off Devices for Breakers

Contact Eaton for a list of padlockable and non-padlockable circuit breaker handle lock-offs.

15. Nameplates, Engraved

Field-attached nameplates.

Modification 15

Description
Mastic back, engraved, black with white lettering
Mastic back, engraved, colors other than black
Nameplates, screw attached

16. Permanent Circuit Numbers

Permanently attached micarta circuit numbering.

17. Seismically Qualified

For seismically qualified PRL4D panelboards, request seismic labeling on order.

18. Service Entrance Equipment

Service Entrance labeling as detailed under the "Service Entrance Equipment" per UL and NEC. Only panelboards meeting these requirements may be labeled as such. The requirement or service entrance labeling must be noted on the order. Includes neutral disconnect link and labeling "Suitable For Use as Service Equipment" (SUSE). Ground bar must be ordered separately. See Modification 11.

19. Shunt Trip for Main or Feeder Breakers

For tripping breaker from remote point. Voltage and frequency must be specified when ordering shunt trips. Wiring to terminal block is included with the drawout molded case product as standard. For all others wired to terminal block, contact Eaton.

20. Sub-Feed Lugs

Available only on main lug only panelboards.

Not available on service entrance panelboards with main lugs using the six disconnect rule.

Mechanical Al/Cu lugs. Compression or copper body lugs require additional price adder from Modification 4 or Modification 6, as appropriate.

Modification 20

Panel Ampere Rating	Box Height Addition
600	4X
800	6X

21. Surge Protective Devices (SPD)

Package includes SPD unit and integral circuit breaker disconnect (30A) connected to the chassis bus.

Modification 21

Surge Current Rating	50	80	100	120	160	200	250	300	400
SPD Package Options—Basic Package									
LED monitor, L-N, L-G, L-L and N-G	■	■	■	■	■	■	■	■	■
Standard Package									
LED monitor, L-N, L-G, L-L and N-G. EMI/RFI filtering. Audible alarm with disable switch. Form C relay contact.	■	■	■	■	■	■	■	■	■
Premium Package									
LED monitor, L-N, L-G, L-L and N-G. EMI/RFI filtering. Audible alarm with disable switch. Form C relay contact. Six-digit LCD display. Counts surges in all modes. Nonvolatile memory (no battery backup). Reset button designed to prevent accidental resets.	■	■	■	■	■	■	■	■	■

22. Through-Feed Lugs

Mechanical Al/Cu lugs. Compression or copper lugs require additional price adder from Modification 4 Compression Lug or Modification 6 Copper Lugs/Terminals.

Modification 22

Refer to PRL4D Layout.

Panel Main Ampere Rating	Box Height Addition
600	7X
800	7X
1200	9X

23. Touchup Paint

Modification 23

Description
12 oz spray can. ANSI-61 light gray indoor
Case lot of 12—12 oz spray can. ANSI-61 light gray indoor

Note

① Available on only single-mounted drawout. Not available on dual-mounted feeder devices.

Type PRL5P

Contents

Description	*Page*
Product Description	**V2-T3-7**
Application Description	**V2-T3-8**
Standards and Certifications	**V2-T3-10**
Technical Data and Specifications	**V2-T3-11**
Type PRL1a	**V2-T3-26**
Type PRL1aF	**V2-T3-30**
Type PRL1a-LX	**V2-T3-34**
Type PRL2a	**V2-T3-38**
Type PRL2aF	**V2-T3-42**
Type PRL2a-LX	**V2-T3-46**
Retrofit Panelboard	**V2-T3-50**
Type PRL3a	**V2-T3-58**
Type PRL3E	**V2-T3-62**
Type PRL4	**V2-T3-66**
Type PRL4D	**V2-T3-76**
Type PRL5P	
Product Description	**V2-T3-88**
Application Description	**V2-T3-88**
Standards and Certifications	**V2-T3-88**
Product Selection	**V2-T3-89**
Technical Data and Specifications	**V2-T3-94**
Dimensions	**V2-T3-94**

Product Overview

The PRL5P panelboard incorporates Eaton's plug-on power panelboard experience with modern manufacturing technology to provide the most flexible plug-on design in the industry.

Designed to eliminate the multitude of parts associated with other similar products, the PRL5P panelboard is the choice for applications where additions and changes must be fast and convenient.

Panelboard Installation

Plug-On Mains and Branches provide the flexibility to move devices on factory-assembled panels after the boards are received at the job site. The electrician may move branch devices and place them into a configuration that fits the particular wiring needs of that installation.

Breakers are mounted to an adapter that includes the bus connection hardware. The breaker to bus bar connection is positive and secure. This proven connection has been utilized by Eaton in plug-on power panelboards since 1984.

Two Enclosure Widths Provide Greater Flexibility

30-Inch (762.0 mm) Wide. The narrowest enclosure in the industry for an 800A main, breaker or lug, and up to 600A branch breakers—while providing ample wiring bending space. An industry exclusive is the ability to mount two 225A, 480 Vac breakers on the same adapter unit. It requires half the space necessitated by other products.

Type PRL5P—30-Inch (762.0 mm) Wide

48-Inch (1219.2 mm) Wide. Provides for mains up to 1200A. The 1200A lug adapter unit accepts up to 750 kcmil conductors. Two 600A breakers can be mounted across from one another. Another exclusive allows breakers of different sizes to be mounted across from one another, providing the ability to maximize space within the panel. There are no restrictions or predetermined spaces where branch devices must be placed.

Type PRL5P—48-Inch (1219.2 mm) Wide

Circuit Breaker and Lug Adapter Units

Breaker adapter units utilize molded case circuit breakers that provide increased performance in considerably less space than standard breakers. They're available from 15–1200A at 600 Vac maximum. A wide range of integrally mounted breaker accessories are available.

Main and through-feed lug adapter units are available and are mounted similar to the breakers. Lug units are available up to 1200A.

Breaker and lug attachment units can withstand fault currents up to 200 kA rms symmetrical.

600A L-Frame Breaker

400A K-Frame Breaker

Dual-Mounted 225A F-Frame Breakers

1200A Main Lug Unit

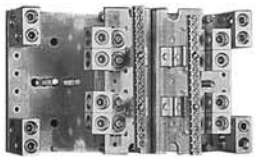

An Oversized Area is Provided for Neutral Connections with Ample Lugs for Ease of Installation

Type PRL5P

Contents

Description	*Page*
Product Description	**V2-T3-7**
Application Description	**V2-T3-8**
Standards and Certifications	**V2-T3-10**
Technical Data and Specifications	**V2-T3-11**
Type PRL1a	**V2-T3-26**
Type PRL1aF	**V2-T3-30**
Type PRL1a-LX	**V2-T3-34**
Type PRL2a	**V2-T3-38**
Type PRL2aF	**V2-T3-42**
Type PRL2a-LX	**V2-T3-46**
Retrofit Panelboard	**V2-T3-50**
Type PRL3a	**V2-T3-58**
Type PRL3E	**V2-T3-62**
Type PRL4	**V2-T3-66**
Type PRL4D	**V2-T3-76**
Type PRL5P	
Product Overview	**V2-T3-86**
Product Selection	**V2-T3-89**
Modifications	**V2-T3-92**
Technical Data and Specifications	**V2-T3-94**
Dimensions	**V2-T3-94**

Type PRL5P

Product Description

- 600 Vac maximum (250 Vdc)
- Three-phase four-wire, three-phase three-wire, single-phase three-wire
- 1200A maximum mains
- 1200A maximum branch devices
- Plug-on branch devices
- Factory assembled
- Refer to **Pages V2-T3-7** and **V2-T3-88** for additional information

Application Description

- Power distribution panelboard
- Fully rated or series rated
- Interrupting ratings up to 200 kA symmetrical
- Suitable for use as Service Entrance Equipment, when specified on the order
- See **Pages V2-T3-7** through **V2-T3-23** for additional information

Standards and Certifications

- UL 67, UL 50
- Federal Specification W-P-115c
- Refer to **Page V2-T3-7** for additional information

Listed

Product Selection

Panelboard Selection and Layout

Select either single-row or double-row bus chassis. Single-row bus chassis—maximum 800 ampere main breaker or main lug only. Select main device and "X" space from table below. Select branch devices and corresponding "X" space from the following tables.

Refer to layout data from the following tables. Make a layout sketch of the main and branch devices utilizing either a single-row or double-row bus chassis indicating the "X" space for each device. The maximum total "X" space cannot exceed 40X for any panelboard. Should more than 40X be required, add the appropriate through-feed lug adapter or breaker to feed an additional panelboard.

Type PRL5P

PRL5P ①

Main Ampere Rating	Interrupting Rating (kA Symmetrical) 240 Vac	480 Vac	600 Vac	250 Vdc	Main Device Type	Main "X" Space
Main Lug Only Single-Row Bus						
400	—	—	—	—	Lug	8X
600	—	—	—	—	Lug	8X
800	—	—	—	—	Lug	8X
Main Lug Only Double-Row Bus						
800	—	—	—	—	Lug	7X
1200	—	—	—	—	Lug	7X
Main Breaker Single-Row Bus						
400	65	—	—	10	DK	4X
400	65	35	25	10	KD	4X
400	100	65	35	22	HKD	4X
400	200	100	65	22	KDC	4X
600	35	35	25	22	LD	6X
600	100	65	35	25	HL	6X
600	200	100	35	25	LDC	6X
800	65	50	25	22	MDL	6X
800	100	65	35	25	HMDL	6X
Main Breaker Double-Row Bus						
800	65	50	25	22	MDL	6X
800	100	65	35	25	HMDL	6X
1200	65	50	25	—	ND	6X
1200	100	65	35	—	HND	6X
1200	200	100	65	—	NDC	6X

Branch Devices—Single-Pole Breakers in Single Adapter Units—PRL5P

Ampere Rating	Interrupting Rating (kA Symmetrical) 120 Vac	240 Vac	277 Vac	125 Vdc	Breaker Type	"X" Type
15–60	14	—	14	10	EHD	2X, 3X
15–60	35	—	35	10	FD	2X, 3X
15–60	65	—	65	10	HFD	2X, 3X

Note

① Includes aluminum bus chassis, box, trim, main and neutral (if required).

Branch Devices—Two- and Three-Pole Breakers in Single Adapter Units—PRL5P

Ampere Rating	Interrupting Rating (kA Symmetrical) 240 Vac	480 Vac	600 Vac	250 Vdc	Breaker Type	"X" Space
100–225	22	—	—	—	EDB	3X
100–225	42	—	—	—	EDS	3X
100–225	65	—	—	—	ED	3X
100–225	100	—	—	—	EDH	3X
100–225	200	—	—	—	EDC	3X
15–60	18	14	—	10	EHD	3X
70–100	18	14	—	10	EHD	3X
15–60	65	35	18	10	FD	3X
70–100	65	35	18	10	FD	3X
110–225	65	35	18	10	FD	3X
15–60	100	65	25	22	HFD	3X
70–100	10	65	25	22	HFD	3X
110–225	100	65	25	22	HFD	3X
15–60	200	100	35	22	FDC	3X
70–100	200	100	35	22	FDC	3X
110–225	200	100	35	22	FDC	3X
70–225	65	35	18	10	JD	3X
250	65	35	18	10	JD	3X
70–225	100	65	25	22	HJD	3X
250	100	65	25	22	HJD	3X
70–225	200	10	35	22	JDC	3X
250	200	100	35	22	JDC	3X
100–400	65	—	—	—	DK	4X
250–400	65	35	25	10	KD	4X
250–400	100	65	35	22	HKD	4X
250–400	200	100	65	22	KDC	4X
300–600	65	35	25	22	LD	6X
300–600	100	65	35	25	HLD	6X
300–600	200	100	50	25	LDC	6X
400–800	65	50	25	22	MDL ①	6X
400–800	100	65	35	25	HMDL ①	6X
400–800	65	50	25	—	ND ①	6X
400–800	100	65	35	—	HND ①	6X
400–800	200	100	65	—	NDC ①	6X
600–1200	65	50	25	—	ND ①	6X
600–1200	100	65	35	—	HND ①	6X
600–1200	200	100	65	—	NDC ①	6X

Branch Devices—Sub-Feed Lug Units—PRL5P

Ampere Rating	Interrupting Rating (kA Symmetrical) 240 Vac	480 Vac	600 Vac	250 Vdc	Breaker Type	"X" Space
400	—	—	—	—	Lug	8X
600	—	—	—	—	Lug	8X
800	—	—	—	—	Lug	8X
1200	—	—	—	—	Lug ①	7X

Note

① For use only in double-row chassis panelboards only.

Branch Devices—Dual Breaker Adapters—PRL5P

Ampere Rating	Interrupting Rating (kA Symmetrical) 240 Vac	480 Vac	600 Vac	250 Vdc	Breaker Type	"X" Space
100–225	65	—	—	—	ED	3X
100–225	100	—	—	—	EDH	3X
100–225	200	—	—	—	EDC	3X
15–60	18	14	—	10	EHD	3X
70–100	18	14	—	10	EHD	3X
15–60	65	35	18	10	FD	3X
70–100	65	35	18	10	FD	3X
110–225	65	35	18	10	FD	3X
15–60	100	65	25	22	HFD	3X
70–100	100	65	25	22	HFD	3X
110–225	100	65	25	22	HFD	3X
15–60	200	100	35	22	FDC	3X
70–100	200	100	35	22	FDC	3X
110–225	200	100	35	22	FDC	3X

Note: Any two breakers listed above may be mounted on the same 2X or 3X dual breaker adapter. Dual breaker adapters may be in single- or double-row chassis. Dual breaker adapters can NOT be mounted across from another in a double-row chassis.

Modifications

1. Ambient Compensating Breakers

For ambient compensating breakers (where available) in lieu of standard breakers, add 10% to panelboard branch breaker and to main breaker list prices, if required. (Not UL listed.)

2. Bus Density

Main bus ampere rating is determined by UL listed temperature test. 1000A per square inch copper is available and included in copper bus price addition.

3. Special Cabinet (Box) Construction

Modification 3

Modification
Type 3R Enclosure
Add per panel

4. Complete Assembly

Complete assembly of panelboard box, interior and trim prior to shipment when required.

Modification 4

Description
Add per panel

5. Conduit Covers

Fabricated sheet metal to cover open conduits above and/or below standard Type 1 box.

Modification 5

Cover Type
Conduit enclosing shield (open back)

6. Copper Main Bus

Modification 6

Panel Construction
Single-bus interior
Double-bus interior

6a. Silver-Plated Copper Main Bus

For silver-plated copper panelboard main bus and/or connectors, add as follows:

Modification 6a

Main Bus Ratings Amperes
Single-bus interior
Double-bus interior

6b. Copper Neutral

Modification 6b

Panel Construction
Single-bus—800A maximum
Double-bus—1200A maximum

7. Copper Lugs

Optional copper only mechanical main lugs (includes main incoming neutral lugs).

Modification 7

Main Lug Amperes
400
600
800
1200

8. Directory Frame—Metal

Modification 8

Frame Type
Metal frame, plastic cover

9. Trim and Door Modifications —Special Fronts and Doors

Modification 9

Type
Hinged door over devices for Type 1 Enclosure

10. Ground Bar

Modification 10

Description
Add per panel

11. Solid-State Trip Units

Modification 11

Description
K-, L-, M-Frame Circuit Breaker
Digitrip RMS310 LS
Digitrip RMS310 LSI
Digitrip RMS310 LSG
Digitrip RMS310 LSIG
N-Frame Circuit Breaker
Digitrip RMS310 LS
Digitrip RMS310 LSI
Digitrip RMS310 LSG
Digitrip RMS310 LSIG

12. Circuit Breaker Handle Lockoff Devices

Modification 12

Description
Non-padlockable
Padlockable

13. Nameplates, Engraved

Modification 13

Type
Mastic back and installed by purchaser, per nameplate
Fixed to panel trim with two screws or rivets, per nameplate

14. Copper Wire Only Terminals for Molded Case Circuit Breakers

To replace standard Al/Cu terminals.

Modification 14

Breaker Frame	Maximum Breaker Ampere Rating	Terminal Material	Wire Range
F	225	Copper	#4–4/0
J	250	Stainless Steel	#4–350
K	225	Copper	(1) #3–350
	350	Copper	(1) 250–500
	400	Copper	(2) 3/0–250
L	600	Copper	(2) 250–500
M	600	Copper	(2) #2/0–500
	800	Copper	(3) #3/0–300
N	700	Copper	(2) #2/0–500
	1000	Copper	(3) #3/0–500
	1200	Copper	(4) #3/0–400

15. Painting and Special Coatings

Standard boxes are code-gauge galvanized sheet steel. Standard trims are code-gauge sheet steel with a rust inhibiting phosphatized coating and finished with ANSI-61.

Modification 15

Description
Painted Boxes (ANSI-61)
Painted Trims or Boxes (other than ANSI-61)

16. Permanent Circuit Numbers

Modification 16

Description
To provide permanently attached Micarta circuit numbers.

17. Service Entrance

To provide a Service Entrance Label as detailed under the "Service Entrance Equipment" in application considerations. Only panelboards meeting these requirements can be labeled as such. The requirement for a Service Entrance Label must be noted on order entry. Includes neutral disconnect link and Service Entrance Equipment Label. (Ground bar not included—see **Modification 10**.)

Modification 17

Description
Add per panel

18. Shunt Trip for Main or Branch Circuit Breaker

For tripping circuit breaker from a remote point. Voltage and frequency must be specified. Wiring to terminal blocks is not included. Standard leads extend 18 inches (457.2 mm) out of breaker.

Circuit breakers with factory installed 120, 240 or 480 Vac shunt trips are available with UL listing as shown in table below.

Modification 18

Description
Add per device

19. Touchup Paint

Modification 19

Type
12 oz. spray can ANSI-61 light gray Indoor
Case lot of 12—12 oz. spray cans ANSI-61 light gray indoor Single style

Technical Data and Specifications

PRL5P Maximum Component Unit Ampere Rating

Bus Chassis Type	Total "X" Space ①	Maximum Ampere Rating of Plug-on Components			
		Main Lugs	Branch Lugs	Main Breaker	Branch Breaker
Single-row bus	24X	800	600	800	600
	32X	800	600	800	600
	40X	800	600	800	600
Double-row bus	24X	1200	1200	1200	1200
	32X	1200	1200	1200	1200
	40X	1200	1200	1200	1200

Main Lug and Sub-Feed Lug Unit—PRL5P

Ampere Rating	"X" Space	Mechanical Lug Size and Number Al/Cu Rated
Single Bus Connection		
400	8X	(1) 1/0–500 kcmil or (2) 1/0–250 kcmil
600	8X	(2) #4–500 kcmil
800	8X	(2) #2–500 kcmil or (3) #2–400 kcmil
Double Bus Connection		
400–1200	7X	(4) #4–750 kcmil

Dimensions

Approximate Dimensions in Inches (mm)

Layout Information—PRL5P Box Sizes

Bus Chassis Type	Total "X" Space ①	Box Width	Box Height
Single-row bus	24X	30.00 (762.0)	64.00 (1625.6)
	32X	30.00 (762.0)	75.00 (1905.0)
	40X	30.00 (762.0)	86.00 (2184.4)
Double-row bus	24X	48.00 (1219.2)	64.00 (1625.6)
	32X	48.00)1219.2)	75.00 (1905.0)
	40X	48.00 (1219.2)	86.00 (2184.4)

Note

① Deduct "X" space for main breaker or lugs from the total available "X" spaces listed above.

Chassis Layout

PRL5P Chassis Layout—"X" Unit Layout of Circuit Breaker and Lug Units—X = 1.38 Inches (34.9 mm)

Double-Bus Interior Mounted in 48-Inch (1219.2 mm) Wide Enclosure

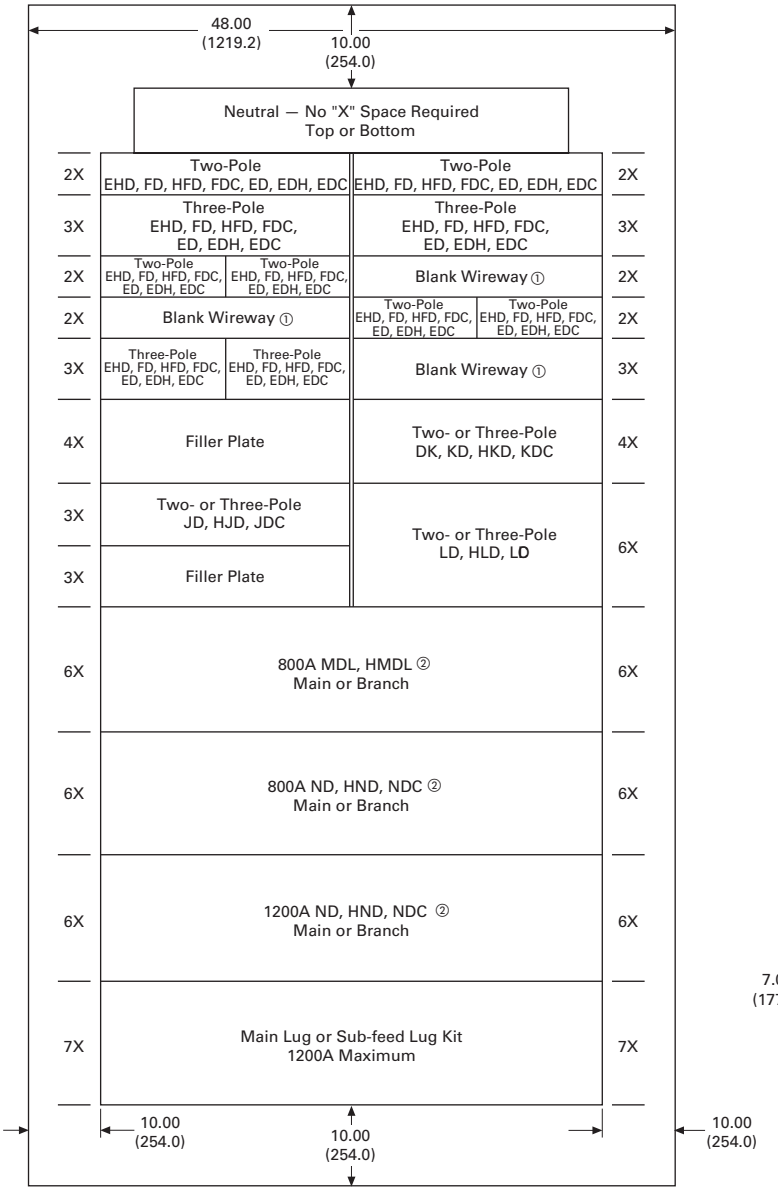

Single-Bus Interior in 30-Inch (762.0 mm) Wide Enclosure

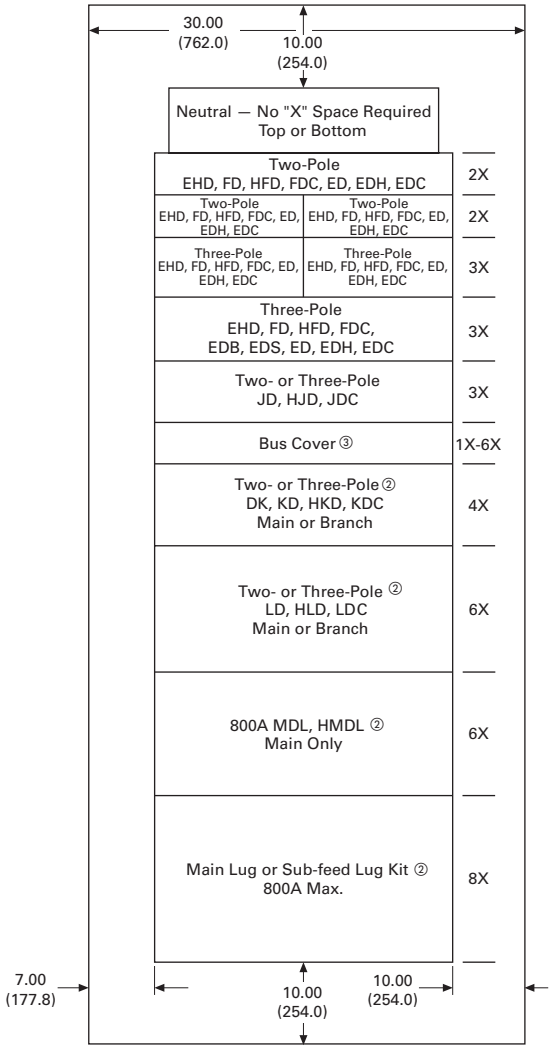

Notes

① Blank wireway fillers are required opposite any dual breaker unit.
② If used as a main device, must be mounted at the neutral end of panel.
③ Fixed bus covers are required for unused spaces if NEC six circuit disconnect rule is to be met.

Elevator Control Panelboard

Contents

Description	*Page*
Elevator Control Panelboard	
Product Selection	**V2-T3-97**
Options	**V2-T3-97**
Box Sizing and Selection	**V2-T3-97**

Elevator Control Panelboard

Product Description

- 600 Vac maximum
- Three-phase four-wire
- 800A maximum mains
- 30–200A branch devices
- Short-circuit current rating up to 200 kA rms symmetrical
- Elevator controls including shunt trip, CPT, indicating lights and keyed selector switch

Application Description

- Instrument protection
- Fully rated
- Interrupting ratings up to 200 kA symmetrical when protected by fuse
- Provides selective coordination to 0.01 seconds with the appropriate upstream overcurrent protective device
- Eaton's Elevator Control Panelboard provides significant space savings in the elevator control room when compared to traditional installations
- Factory assembled

Standards and Certifications

- UL 67 panelboards
- UL 50 enclosures
- UL 98 fusible switches

Elevator Control Panelboard is intended to meet the:

- NFPA 70 (National Electrical Code)
- NFPA 72 (National Fire Alarm Code)
- ANSI/ASME A17.1 (Safety Code for Elevators and Escalators)
- NFPA 13 (Installation of Sprinkler Systems)

Listed

Product Selection

Elevator Control Panelboard

Elevator Control Panelboard

Ampere Rating	Interrupting Rating (kA Symmetrical) 600 Vac	Main Type	Fuse Clip ①
Main Lug Only			
400	200	—	—
600	200	—	—
800	200	—	—
Main Fusible Switch 600 Vac			
400	200	FDPW	Class J
600	200	FDPW	Class J
800	200	FDPB	Class J

Branch Elevator Control Modules ②

Ampere	Interrupting Rating (kA Symmetrical)	Breaker Type	Fuse Clip ①
30	200	FDPB	Class J
60	200	FDPB	Class J
100	200	FDPB	Class J
200	200	FDPB	Class J

Options

Elevator Control Options

Description	
Fused control power transformer	
Fire safety interface relay	
ON pilot light	
Isolated neutral termination	
200% isolated neutral termination	
Fire alarm voltage monitoring relay (monitors shunt trip voltage)	
NEMA Type 3R enclosure	
Surge Protective Devices	
120 kA	Basic
	Standard
	Standard with surge counter
160 kA	Basic
	Standard
	Standard with surge counter
200 kA	Basic
	Standard
	Standard with surge counter
250 kA	Basic
	Standard
	Standard with surge counter

Notes

① Fuses provided by others.

② Standard features include, fused switch with 120 Vac shunt trip, control power terminals ground termination, 120 Vac key test switch, 1NO and 1NC 120 Vac class mechanically interlocked auxiliary contact for hydraulic elevators with automatic recall.

Box Sizing and Selection

- Refer to Bid Manager™ drawings for your specific configuration

Panelboards and Lighting Controls

Contents

Description ***Page***

Types PRL1a, 2a, 3a, 3E, 4, Column Modifications Selection Guide **V2-T3-98**

Types PRL1a, 2a, 3a, 3E, 4, Column

Modifications Selection Guide

Modifications—Alphabetical Index

		Available on Panelboard Types						
Modification	**Item**	**PRL1a**	**PRL2a**	**PRL3a**	**PRL3E**	**PRL4B**	**PRL4F**	**Column Type**
Ambient compensating breakers	1	No	No	Yes	No	Yes	—	No
Bus density	2	Yes	Yes	Yes	Yes	Yes	Yes	Yes
Cabinets—special: Types 2, 3R, 4, 4X, 12	3	Yes	Yes	Yes	Yes	Yes	Yes	No
Complete assembly	4	Yes	Yes	Yes	Yes	Yes	Yes	Yes
Compression type lugs, mains only	5	Yes	Yes	Yes	Yes	Yes	Yes	Yes
Concealed trim clamps (LT trim)	6	Yes	Yes	Yes	Yes	No	No	No
Conduit covers	7	Yes	Yes	Yes	Yes	Yes	Yes	No
Copper lugs	8	Yes	Yes	Yes	Yes	Yes	Yes	Yes
Copper main bus	9, 9a, 9b	Yes	Yes	Yes	Yes	Yes	Yes	Standard
Directory frame—metal	10	Yes	Yes	Yes	Yes	Yes	Yes	No
Doors, special	11	Yes	Yes	Yes	Yes	Yes	Yes	Yes
Fungus-proof	12	Yes	Yes	Yes	Yes	Yes	Yes	Yes
Ground bar	13	Yes	Yes	Yes	Yes	Yes	Yes	Yes
Electronic trip units	14	No	No	No	Yes	Yes	—	No
Ground fault protection (zero sequence)	15	No	No	No	No	Yes	Yes	No
Handle lockoff device	16	Yes	Yes	Yes	Yes	Yes	Std.	Yes
Hinges, special (LT trim)	17	Yes	Yes	Yes	Yes	Yes	Yes	No
Increased dimensions	18	Yes	Yes	Yes	Yes	No	No	No
Increased panel bus rating	19	Yes	Yes	Yes	Yes	No	No	No
Interiors to fit existing boxes	20	Yes	Yes	Yes	Yes	Yes	Yes	No
Locks, special (LT trim)	21	Yes	Yes	Yes	Yes	Yes	Yes	No
Molded case switches	22	Yes	Yes	Yes	Yes	Yes	No	Yes
Nameplates engraved	23	Yes	Yes	Yes	Yes	Yes	Yes	Yes

Modifications—Alphabetical Index, continued

		Available on Panelboard Types						
Modification	**Item**	**PRL1a**	**PRL2a**	**PRL3a**	**PRL3E**	**PRL4B**	**PRL4F**	**Column Type**
Neutral rated 200%	24	Yes	Yes	Yes	Yes	Yes	Yes	Yes
Painting and special coating	25	Yes	Yes	Yes	Yes	Yes	Yes	Yes
Permanent circuit numbers	26	Yes	Yes	Yes	Yes	Yes	Yes	Yes
Remote control switches (ASCO 920)	27	No	No	Yes	Yes	No	No	No
Service entrance	28	Yes	Yes	Yes	Yes	Yes	Yes	No
Shunt trips	29	Yes	Yes	Yes	Yes	Yes	Yes	Yes
Split bus or meter loop	30	No	No	Yes	No	No	No	No
Metering devices	31	No	No	No	Yes	Yes	Yes	No
Sub-metering, IQ Energy Sentinel	32	No	No	No	No	Yes	No	No
Sub-feed breakers	33	Yes	Yes	Yes	Yes	No	No	Yes
Sub-feed lugs	34	Yes	Yes	Yes	Yes	Yes	Yes	No
Tamperproof screws (LT trim)	35	Yes	Yes	Yes	Yes	Yes	Yes	Yes
Through-feed lugs	36	Yes	Yes	Yes	Yes	Yes	Yes	Yes
Time clock space only	37	Yes	Yes	Yes	Yes	—	—	No
Touchup paint	38	Yes	Yes	Yes	Yes	Yes	Yes	Yes
Surge protective device (SPD)	39	Yes	Yes	Yes	Yes	Ye	Yes	No
Terminals, copper only for breakers	40	Yes	Yes	Yes	Yes	Yes	—	Yes

1. Ambient Compensating Breakers

For ambient compensating breakers (where available) in lieu of standard breakers, add 10 percent to panelboard branch breaker and to main breaker list prices, if required. (Not UL listed.)

2. Bus Density

Main bus ampere rating is determined by UL listed temperature test. For 750A per square inch aluminum or 1000A per square inch copper, make price addition as follows:

Modification 2

Panel Type	Maximum Amperes
Aluminum—750 A per Square Inch	
PRL1a, 2a	100
	225
	400
PRL3a	250
	400
PRL4	400
	800
Copper—1000 A per Square Inch	
PRL1a, 2a	100
	225
	400, 600
PRL3a	250
	600
PRL4	400
	1200

3. Special Cabinet (Box) Construction

Modification 3

Modification
Type 1 Enclosure
28-inch (711.2 mm) wide in place of standard 20-inch (508.0 mm) wide PRL1a, PRL2a, PRL3a, PRL3E
Type 2 Enclosure
(Drip-proof with gasketed trim) PRL1a, PRL2a, PRL3a, PRL3E 20-inch (508.0 mm) wide
Type 3R Enclosure
PRL1a, PRL2a 20-inch (508.0 mm) wide
PRL1a, PRL2a 28-inch (711.2 mm) wide
PRL3a ①, PRL3E 20-inch (508 mm) wide (600A maximum)
PRL3a ①, PRL3E 28-inch (711.2 mm) wide (600A maximum)
PRL4 24-inch (609.6 mm) or 36-inch (914.4) wide only
Type 12 Enclosure
PRL1a, PRL2a 20-inch (508.0 mm) wide
PRL1a, PRL2a 28-inch (711.2 mm) wide
PRL3a ①, PRL3E 20-inch (508 mm) wide (600A maximum)
PRL3a ①, PRL3E 28-inch (711.2 mm) wide (600A maximum)
PRL4 24-inch (609.6 mm) or 36-inch (914.4) wide only Must also add bus density price from Modification 2 for PRL4
Type 4 Enclosure or Type 4X Stainless Steel Enclosure
Refer to Eaton

4. Complete Assembly

Complete assembly of panelboard box, interior and trim prior to shipment when required.

5. Compression Main Lugs—Al/Cu Burndy Range Taking

For other terminal types and box sizes, refer to Eaton.

Modification 5—Compression Lug Data

Main Amperes	Wire Range by Panel Type PRL1a and PRL2a	PRL3E	PRL3a	PRL4
100	(1) #1–1/0 or (1) 2/0–300 kcmil	—	—	—
125	—	(1) #4–2/0 or (1) 2/0–300 kcmil	(1) #4–2/0 or (1) 2/0–300 kcmil	—
225	(1) 2/0–300 kcmil or (1) 4/0–500 kcmil	—	—	—
250	—	(1) 2/0–350 kcmil or (1) 4/0–500 kcmil	(1) 2/0–350 kcmil or (1) 4/0–500 kcmil	(2) 500–750 kcmil
400	(2) 4/0–300 kcmil or (2) 500–750 kcmil	(2) 4/0–300 kcmil or (2) 500–750 kcmil	(2) 4/0–300 kcmil or (2) 500–750 kcmil	(2) 500–750 kcmil
600	—	(2) 2/0–500 kcmil or (2) 500–750 kcmil	(2) 2/0–500 kcmil or (2) 500–750 kcmil	(2) 500–750 kcmil
800	—	—	—	(3) 500–750 kcmil
1200	—	—	—	(4) #2–600 kcmil or (4) 500–750 kcmil

Modification 5—Box Height Additions

Main Amperes	PRL1a, PRL2a	PRL3E, PRL3a without Neutral	PRL3E, PRL3a with Neutral
100	0	0X	0X
225	0	—	—
250	—	2X	5X
400	0	0X	0X
600	0	0X	0X

Maximum size for PRL1a and PRL2a panels:
1–750 kcmil per phase, or 2–500 kcmil per phase.
For PRL4 panels, see layout pages.

6. Concealed Trim Clamps—LT Trim

Modification 6

Description
Add per panel PRL1a, PRL2a, PRL3a, PRL3E

7. Conduit Covers

Fabricated sheet metal to cover open conduits above and/or below standard Type 1 box.

Modification 7

Cover Type
Conduit Enclosing Shield (open back) PRL1a, PRL2a, PRL3a, PRL3E, PRL4—Refer to Eaton
Conduit Enclosure (solid back) PRL1a, PRL2a, PRL3a, PRL3E, PRL4—Refer to Eaton

Note

① At 600A, PRL3a requires the addition of density rated copper bus for Type 3R or 12 enclosure.

8. Copper Lugs

Optional copper mechanical main lugs only. (Includes main incoming neutral lug.)

Modification 8

Main Amperes	Wire Range and Number of Lugs Per Phase
100	(1) #14–1/0
225	(1) #6–250 kcmil
250	(1) #6–250 kcmil
400	(2) #1/0–600 kcmil
600	(2) #1/0–600 kcmil
800	(2) #1/0–600 kcmil
1200	(3) #1/0–600 kcmil

Modification 8—Box Height Additions

Main Amperes	PRL1a, PRL2a	PRL3E, PRL3a without Neutral	PRL3E, PRL3a with Neutral	PRL4
100	0	0X	0X	—
225	0	—	—	—
250	—	0X	0X	0X
400	0	0X	0X	0X
600	—	1X	1X	0X
800	—	—	—	0X
1200	—	—	—	0X

9. Copper Main Bus

Modification 9

Available in PRL1a, PRL2a, PRL3a, PRL3E, PRL4, PRL1aF, PRL2aF, PRL1R, PRL2R, PRL1a-LX and PRL2a-LX

9a. Silver-Plated Copper Main Bus

Modification 9a

Available in PRL1a, PRL2a, PRL3a, PRL3E, PRL4, PRL1aF, PRL2aF, PRL1R, PRL2R, PRL1a-LX and PRL2a-LX

9b. Tin-Plated Copper Main Bus (PRL1a, 2a, 3a, Only)

Modification 9b

Panel Type
PRL1a, PRL2a, PRL3a, PRL3E

10. Directory Frame—Metal

Modification 10

Frame Type
Metal frame, plastic cover

11. Trim and Door Modifications—Special Fronts and Doors

Modification 11

Description
Door-in-door, one door over interior and one which exposes gutter. (LT Trim) (PRL1a, PRL2a, PRL3a, PRL3E only)
Common trim for two section panels with boxes bolted together. (LT Trim) (PRL1a, PRL2a, PRL3a, PRL3E only)
Standard flush lock with quarter turn fasteners at top and bottom of trim door (LT Trim) (standard on doors 48-inch (1219.2 mm) high and over). (PRL1a, PRL2a, PRL3a, PRL3E only)
To provide a trim with a lockable door for PRL4 panels (door-in-door is standard with this adder). Includes National lock with standard keying. ① **Add per panel**

12. Fungus Proofing

For fungus proofing external portions of circuit breakers and all non-metallic parts, add 10 percent of total panelboard list price. For fungus proofing fusible switches and all non-metallic parts, add 20 percent of total panelboard list price.

13. Ground Bar

Modification 13

	Description	Bar Type
Panel Type		
PRL1a PRL2a PRL3a PRL3E PRL4	Aluminum terminal bar for aluminum or copper cable	Standard, insulated/isolated ②
	Copper terminal bar for copper cable only	Standard, insulated/isolated ②
Column Type		
In Pull Box In Gutter	Aluminum terminal bar for aluminum or copper cable	Standard, insulated/isolated ②
	Copper terminal bar for copper cable only	Standard, insulated/isolated ②

Notes

① Extra depth box is required. Box will be 12.82-inch (325.6 mm) deep.

② For PRL1a, 2a, 3a and Column Type panelboards. The insulated/isolated ground bar includes a standard ground bar.

14. Electronic Trip Units

Modification 14—Applies to Digitrip 310 and 310+ Trip Units

Description
K-, L- and M-Frame Circuit Breaker (three-pole only)
Digitrip RMS310 LS
Digitrip RMS310 LSI
Digitrip RMS310 LSG ①
Digitrip RMS310 LSIG ①
N-Frame circuit breaker
Digitrip RMS310 LS
Digitrip RMS310 LSI
Digitrip RMS310 LSG ①
Digitrip RMS310 LSIG ①
Digiview Ammeter for 310+ Trip Unit

15. Zero Sequence Ground Fault Protection

For main devices only (circuit breakers or FDPW switch) in PRL4 assembled panels. Available in 250–1200A panels.

Price includes current monitors, ground bar, static sensor, shunt trip, necessary space, mounting and connecting in panelboards. Price does not include circuit breaker or FDPW switch.

Zero sequence ground fault is available with the following family of main devices:

Modification 15

Main Device
JD, KD, LD, MDL, ND, LCL, LA-P, NB-P FDPW switches (400–1200A)

16. Circuit Breaker Handle Lockoff Devices

Modification 16

Breaker Types
Non-Padlockable
BAB, QBHW, GHB, EHD, FDB, FD, ED, EDH, EDC, HQP, QPHW
JD, KD, MDL, ND
Padlockable
EHD, FDB, FD, HFD, FDC, ED, EDH, EDC, GHB, BAB, QBHW, HQP, QPHW, EGB, EGS, EGH
JD, KD, LD, MDL, ND, FDE, HFDE

17. Special Hinges—LT Trim

Piano hinges in lieu of standard hinges.

18. Increased Dimensions (PRL1a, PRL2a, PRL3a and PRL3E Only) Type 1 Enclosure Only

Modification 18

Description
Increased End Gutters
4 inch (101.6 mm) Top or Bottom
7 inch (177.8 mm) Top or Bottom
12 inch (304.8 mm) Top or Bottom
Increased Side Gutters
4 inch (101.6 mm) Left or Right
7 inch (177.8 mm) Left or Right
12 inch (304.8 mm) Left or Right

19. Increased Panel Main Bus Rating (Three-Phase Four-Wire, Single-Phase Three-Wire)

Modification 19

Main Bus Ampere Rating	Panel Type
100–225/250	PRL1a, PRL2a, PRL3a, PRL3E
225–400	
600 (PRL3a)	
250–400	PRL4
400–600	
600–800	
800–1200	

20. Interior and Fronts to Fit Existing Boxes

Refer to Eaton.

21. Special Locks

Modification 21

Description
LT Type Trim
Yale 511S with rosette
Yale 4651S (LL803 Key)
Master keying—above locks or standard lock—per panelboard
Corbin 15767 (Cat. #60 Key) PRL1a, PRL2a, PRL3a, PRL3E
Tee handle and 3-point catch PRL1a, PRL2a, PRL3a, PRL3E
COMPX metal lock with standard keying PRL1a, PRL2a, PRL3a, PRL3E
COMPX metal lock with GE75 keyway PRL1a, PRL2a, PRL3a, PRL3E, PRL4
EZ Type Trim
Standard Lock, Keyed GE75
Standard Lock, Keyed to Corbin TEU-1
Standard Lock, Keyed to Corbin Cat 60
Standard Lock, Keyed to Corbin WEM1

Notes

① Main breaker only.

PRL4 with door includes National lock with standard keying. See **Modification 11**.

22. Molded Case Switches (Three-Pole, Two-Pole)

Modification 22

Not UL Listed

Breaker Frame	Maximum Volts	Maximum Amperes
EHD	480	100
FD	600	225
JD	600	250
DK	240	400
KD	600	400
LD	600	600
MDL	600	800
ND	600	1200

23. Nameplates, Engraved

Modification 23

Type
Mastic back and installed by purchaser, per nameplate
Fixed to panel trim with two screws or rivets, per nameplate PRL1a, PRL2a, PRL3a, PRL3E only

24. Neutral Rated 200%

Modification 24

Main Bus Rating	Neutral Rating
100	225
225	450
250	500
400	800
600	1200

Modification 24—Box Height Additions

Main Bus Rating	Neutral Rating	PRL1a, PRL2a	PRL3a, PRL3E	PRL4
100	225	0	0X	—
225	450	0	—	—
250	500	—	3X	0X
400	800	0	3X	0X
600	1200	—	3X	0X

Note: Dimensions based on mechanical lugs. For compression or copper lugs, refer to Eaton.

For 800 and 1200A PRL4 with 200% neutral, refer to Eaton.

25. Painting and Special Coatings

Standard boxes are code-gauge galvanized sheet steel. Standard trims are code-gauge sheet steel with a rust inhibiting phosphatized coating and finished with ANSI-61.

Modification 25

Description
Painted boxes (ANSI-61)
Painted trims or boxes (other than ANSI-61)

26. Permanent Circuit Numbers

Modification 26

Description
To provide permanently attached Micarta ×circuit numbers.

27. Remote Control Switches—ASCO 920 (Three-Pole, Two-Pole)

Electrically operated, mechanically held remote control switch directly mounted to panelboard bus for total or split bus switching applications.

(For split bus applications, make price addition from **Modification 30**.)

480 Vac maximum short-circuit rating of panelboard is 22 kAIC maximum.

Includes complete installation in the panelboard with a screw cover over the switch compartment.

Pushbuttons or other control devices are not included. For control circuit modifications, refer to Eaton.

Modification 27—Remote Control Switches (PRL3a and PRL3E Only)

Switch Rating Amperes
30, 60, 75, 100, 150, 200, 225

Modification 27—Remote Control Switch Modifications

Description
Two-wire control relay
Three-wire control relay
Control power transformer
To provide hinged cover in place of standard screw cover

28. Service Entrance

To provide a Service Entrance Label as detailed under the "Service Entrance Equipment" in application considerations. Only panelboards meeting these requirements can be labeled as such. The requirement for a Service Entrance Label must be noted on order entry. Includes neutral disconnect link and Service Entrance Equipment Label. (Ground bar not included—see **Modification 13**.)

Modification 28

Panel Type
PRL1a, PRL2a, PRL3a, PRL3E, PRL4

29. Shunt Trip for Main or Branch Circuit Breaker and FDPW Switches

For tripping device from a remote point. Voltage and frequency must be specified. Wiring to terminal blocks is not included. Standard leads extend 18-inches (457.2 mm) out of device.

Factory-installed 120, 240 or 480 Vac shunt trips are available with UL listing as shown in table below. Underwriters Laboratories listing is not available for shunt trip mounted on molded case switches.

Modification 29

Device
BAB, QBHW Requires one additional pole space, i.e., single-pole is two-pole size, two-pole is three-pole size and three-pole is four-pole size.
GHB (three-pole only)
All other circuit breakers
FDPW switch (400–1200A)

30. Split Bus or Meter Loop (250A Max., 3Ph 4W, 3Ph 3W, 1Ph 3W, 1Ph 2W)

Panel type PRL3a only. For enclosure size, refer to Eaton.

Modification 30

Main Bus Amperes
100–250

31. Metering Devices (PRL4 Only)

IQ digital metering for incoming service. Devices are installed in chassis mounted compartment with hinged door. Standard CTs (1200A maximum) are included with devices. Requires copper bus at 1200A.

Modification 31

Device	Box Height Addition
IQ 130 with CTs and display	13X
IQ 130 with CTs, no display	13X
IQ 140 with CTs and display	13X
IQ 140 with CTs, no display	13X
IQ 150 with CTs and display	13X
IQ 150 with CTs, no display	13X
IQ 210 with CTs	13X
IQ 220 with CTs	13X
IQ 230 with CTs	13X
IQ 230M with CTs	13X
IQ 250 with CTs and display	13X
IQ 250 with CTs, no display	13X
IQ 260 with CTs and display	13X
IQ 260 with CTs, no display	13X
PXM 2250 with CTs and display	13X
PXM 2250 with CTs, no display	13X
PXM 2260 with CTs and display	13X
PXM 2260 with CTs, no display	13X
PXM 2270 with CTs and display	13X
PXM 2270 with CTs, no display	13X

32. Sub-Metering IQ Multi-Point Submeter II *(PRL4 Only)*

Microprocessor-based breaker-mounted device to monitor power and energy (kW, kWH, kW demand). Device mounts on the load side of three-pole F-, J- and K-Frame feeder breakers. Units are shipped with the interior for field installation. Minimum box width of 36 inches (914.4 mm) is required.

Modification 32

IQ Energy Sentinel
F-Frame three-pole (150A maximum)
J-Frame three-pole
K-Frame three-pole

33. Sub-Feed Breakers

Modification 33—Panel Types PRL1a, PRL2a, PRL3a, PRL3E. One Breaker Per Panel

Maximum Amperes	Number of Poles	Breaker Type	Interrupting Rating (kA Symmetrical) 240V	480V	Box Height Addition PRL3a
100	2	EHD	18	14	NA
150	2	FDB	18	14	NA
225	2	FD	65	35	NA
225	2	HFD	100	65	NA
225	2	FDC	200	100	NA
225	2	EDB	22	—	NA
225	2	EDS	42	—	NA
225	2	ED	65	—	NA
225	2	EDH	100	—	NA
225	2	JD	65	35	14X
225	2	HJD	100	65	14X
225	2	JDC	200	100	14X
250	2	JD	65	35	14X
250	2	HJD	100	65	14X
250	2	JDC	200	100	14X
400	2	DK	65	—	15X
400	2	KD	65	35	15X
400	2	HKD	100	65	15X
400	2	KDC	200	100	15X
100	3	EHD	18	14	NA
150	3	FDB	18	14	NA
225	3	FD	65	35	NA
225	3	HFD	100	65	NA
225	3	FDC	200	100	NA
225	3	EDB	22	—	NA
225	3	EDS	42	—	NA
225	3	ED	65	—	NA
225	3	EDH	100	—	NA
225	3	JD	65	35	14X
225	3	HJD	100	65	14X
225	3	JDC	200	100	14X
250	3	JD	65	35	14X
250	3	HJD	100	65	14X
250	3	JDC	200	100	14X
400	3	DK	65	—	15X
400	3	KD	65	35	15X
400	3	HKD	100	65	15X
400	3	KDC	200	100	15X

Note: 225A maximum on Column Type panels. Sub-feed breaker not available on PRL3a panel with subchassis.

Modification 33—Panel Type PRL3a Only. Two Breakers Per Panel—Twin Mounted

Maximum Amperes	Number of Poles	Breaker Type	Interrupting Rating (kA Symmetrical) 240 Volts	480 Volts	Box Height Addition PRL3a
225	2	JD	65	35	20X
225	2	HJD	100	65	20X
225	2	JDC	200	100	20X
250	2	JD	65	35	20X
250	2	HJD	100	65	20X
250	2	JDC	200	100	20X
225	3	JD	65	35	20X
225	3	HJD	100	65	20X
225	3	JDC	200	100	20X
250	3	JD	65	35	20X
250	3	HJD	100	65	20X
250	3	JDC	200	100	20X

34. Sub-Feed Lugs (3Ph 4W, 3Ph 3W, 1Ph 3W, 1Ph 2W)

Note: Not available on service entrance panels with main lugs only (six disconnect rule).

Mechanical Al/Cu lugs. Compression or copper lugs requires additional price adder from **Modification 5—Compression Lug Data** or **Modification 8** as appropriate.

Available on main lug panels only.

Modification 34

Main Amperes	Box Height Addition
Panel Types PRL1a, PRL2a	
100–225	0X
Panel Type PRL3a, PRL3E	
100–250	1X
Panel Type PRL4 ①	
250–400	0X
600	4X

35. Tamperproof Screws—LT Trim

Modification 35

Description
Tamperproof screws for trims, in lieu of standard screws.

36. Through-Feed Lugs (3Ph 4W, 3Ph 3W, 1Ph 3W, 1Ph 2W)

Note: 225 amperes maximum on Column Type panels. Not available on service entrance panels with main lugs only (six disconnect rule).

Mechanical Al/Cu lugs. Compression or copper lugs requires additional price adder from **Modification 5—Compression Lug Data** or **Modification 8** as appropriate.

Not available on panels with sub-feed breaker.

Modification 36

Main Amperes	Box Height Addition
Panel Types PRL1a, PRL2a	
100	②
225	②
400	②
600	②
Panel Type PRL3a, PRL3E	
100	2X
250	5X
400	8X
600	8X
800	14X
Panel Type PRL4 ②	
250	7X
400	7X
600	7X
800	7X
1200	5X

37. Time Clock Space Only

Includes box, trim, door and mounting pan.

Modification 37

Enclosure Type
Type 1
PRL1a, PRL2a, PRL3a, PRL3E (24-inch (609.6 mm) space)
PRL1a, PRL2a, PRL3a, PRL3E (36-inch (914.4mm) space)
Type 3R
PRL1a, PRL2a, PRL3a, PRL3E (24-inch (609.6 mm) space)

38. Touchup Paint

Modification 38

Description
12 oz. spray can. ANSI-61 light gray indoor
Case Lot of 12—12 oz. spray cans. ANSI-61 light gray indoor single style

Notes

① Refer to PRL4 layout.
② Refer to panelboard sizing charts.

39. Surge Protective Device (SPD)

Type PRL1a, PRL2a, PRL 3a and PRL3E Panelboards

Package includes SPD unit connected to the panelboard bus.

Available for all enclosure types.

Sizing:
PRL1a, PRL2a, PRL3E: Add 7 inches (177.8 mm) to the standard box height.

PRL3a: Add 4X for 100–200 kA SPD units.

PRL3E: AdVisor/SuperVisor display (200 kA maximum) add 8 inches. SML TVSS add 7 inches.

Type PRL4 and Elevator Control Panelboards

Package includes SPD unit and integral circuit breaker disconnect (30A) connected to the panel bus.

Available for all enclosure types.

The SPD unit and integral circuit breaker disconnect will require 7X of chassis space. (Only available in 36-inches (914.4 mm) or 44-inches (1117.6 mm) wide enclosure.)

Modification 39

Description	kA/Phase								
Surge Current Rating	**50**	**80**	**100**	**120**	**160**	**200**	**250**	**300**	**400**
SPD Package Options									
Basic LEDs monitor L-N, L-G, L-L and N-G									
PRL1a, PRL2a, PRL3a, PRL3E	■	■	■	■	■	■	—	—	—
PRL4, Elevator Control Panelboard	■	■	■	■	■	■	■	■	■
Standard Feature Package LEDs monitor L-N, L-G, L-L and N-G EMI/RFI filtering Audible alarm with disable switch Form C relay contact									
PRL1a, PRL2a, PRL3a, PRL3E	■	■	■	■	■	■	—	—	—
PRL4, Elevator Control Panelboard	■	■	■	■	■	■	■	■	■
Standard Package LEDs monitor L-N, L-G, L-L and N-G EMI/RFI filtering Audible alarm with disable switch Form C relay contact Six digit LCD display Counts surges in all modes Non-volatile memory (no battery backup) Reset button designed to prevent accidental resets									
PRL1a, PRL2a, PRL3a, PRL3E	■	■	■	■	■	■	—	—	—
PRL4, Elevator Control Panelboard	■	■	■	■	■	■	■	■	■

40. Copper Wire Only Terminals for Molded Case Circuit Breakers

(To replace standard Al/Cu terminals.)

Modification 40

Breaker Frame	Maximum Breaker Ampere Rating	Terminal Material	Wire Range
F	225	Copper	#4–4/0
J	250	Stainless Steel	#4–350
K	225	Copper	(1) #3–350
	350	Copper	(1) 250–500
	400	Copper	(2) 3/0–250
L	600	Copper	(2) 250–500
M	600	Copper	(2) #2/0–500
	800	Copper	(3) #3/0–300
N	700	Copper	(2) #2/0–500
	1000	Copper	(3) #3/0–500
	1200	Copper	(4) #3/0–400

Note

① Requires 15A branch breaker for cable connection—three-pole (three-phase) or two-pole (single-phase). (Add breaker separately, not included in price.)

Pow-R-Command Family

Contents

Description	*Page*
Features	**V2-T3-108**
Product Selection	**V2-T3-111**
Accessories	**V2-T3-121**

An Eaton Green Solution

Product Overview

Pow-R-Command™ is a lighting control and energy management system that integrates branch circuit protection, control (switching and dimming) and metering into a single panelboard enclosure. The integrated design simplifies electrical distribution and control systems design, and eliminates separate equipment enclosures and associated wiring. Other benefits include reducing equipment wall space, installation labor and total installed cost. Pow-R-Command systems are designed to meet or exceed ASHRAE, IECC and LEED® requirements.

Pow-R-Command Intelligent Panelboards use Eaton Pow-R-Line® 1a and 2a lighting panelboard platforms to mount Pow-R-Command electronics and solenoid-operated controllable circuit breakers. Panelboard mains include 100 A to 400 A main lug and main circuit breaker configurations. Available voltages include 120/240, 208Y/120 and 480Y/277, single-phase and three-phase. Panelboard options include installation of controllable and non-controllable circuit breakers, 200% rated neutral, metering and surge protection devices (SPDs).

Pow-R-Command Intelligent Panelboards are assembled in two basic configurations, Pow-R-Command Master and Expansion Panelboard. Pow-R-Command Master Panelboards are designed for standalone and networked systems. Master Panelboard components include controller with low voltage power supply, Breaker Control Bus (BCB) and solenoid-operated controllable circuit breakers. Expansion Panelboards (PRCEP) are designed to directly connect to Master Panelboard via controller SLAN communications. Expansion Panelboard includes BCB and solenoid-operated controllable circuit breakers. Pow-R-Command systems are scalable using both Master and Expansion Panelboards to provide the right amount of control with reduced installed cost.

System Electronics

The 5th generation PRC "E" Series controller family includes PRC2000E, PRC1500E, PRC1000E and PRC750E models. Specifiers and users select the controller to meet specific control and communication requirements. PRC-E controllers offer a broad range of schedule and occupant-based control. Network options include RS-485 and Ethernet. PRC-E controllers communicate with each other using powerful Pow-R-Command peer-to-peer protocol. All PRC-E controllers can be programmed, monitored and overridden using the onboard Web pages through the controller maintenance Ethernet port using an industry standard patch cable. The PRC2000E model includes access to onboard Web pages through the Ethernet network connector. Both PRC1500E and PRC2000E models include BACnet/IP for simple and straightforward integration with building management systems. All Pow-R-Command controllers can control up to 168 solenoid-operated controllable circuit breakers by connecting PRCEP panelboards using the controller SLAN sub-network communications port.

Breaker Control Bus electronics come in 9-, 18- and 21-circuit lengths depending on the size of the panelboard and are directly mounted to panelboard interior rails. BCBs are connected to the controller SLAN via 4-conductor cable and act as the interface between controller and controllable circuit breaker for providing status and control. Onboard power switching circuitry signals the controllable circuit breaker solenoid to switch the controllable circuit breaker ON and OFF. Each BCB is addressable between 1 and 8, allowing the controller to monitor and control up to 168 controllable circuit breakers. Pow-R-Command panelboards are assembled with one or two BCBs to offer the right amount of control.

Controllable Circuit Breakers

Controllable circuit breakers include standard circuit protection and control. Solenoid mechanism provides control, mechanical and electronic status and override lever. Controllable circuit breakers are available in 15–30 A, single-pole and two-pole configurations and are suitable for electrical distribution systems up to 480Y/277 Vac. Special application controllable circuit breakers include emergency and plug load. Emergency controllable circuit breakers are used for controlling dual purpose emergency lighting fixtures. Plug load controllable circuit breakers are used to meet new energy codes requiring 50% of receptacles to switched ON and OFF using schedule- or occupancy-based control systems. The two-pole device includes a standard non-controlled and controllable circuit breaker pole for connecting to split receptacles. The common handle tie disconnect and common trip mechanism allows for shared neutrals and meets NEC requirements.

Accessories

Pow-R-Command system accessories include digital switches (PRCDS) and low voltage switches (PRCLS) to provide local occupant override and light level scene control. Switches are available in 2-, 4- and 6-button configurations in white, black and almond colors.

Software

Programming, monitoring and control software includes Lighting Optimization Software (LOS), Building Graphics Software (BGS) custom graphics and Site Server (WSS).

Features

Pow-R-Command Master Panelboard Mounted Components

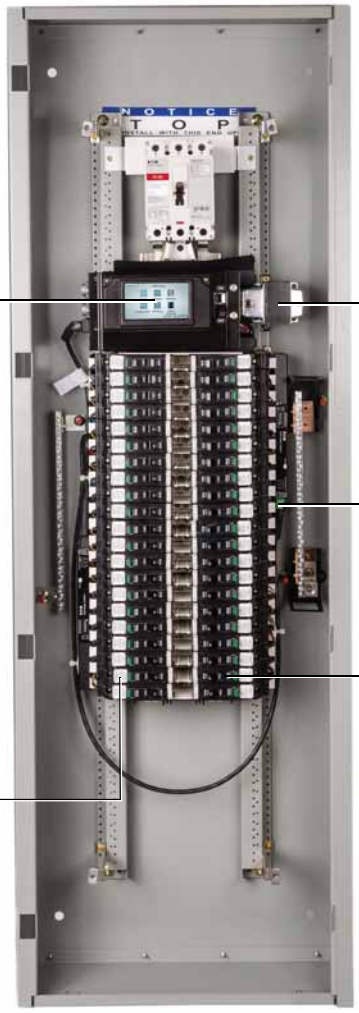

PRC-E panelboard system is controlled and monitored by microprocessor-based controller. Onboard time clock provides schedule-based control. Digital inputs are used for connecting low voltage wallstations and occupancy sensors for override control. Analog I/O used for dimming and daylight harvesting control. Light level sensors are connected to analog inputs. Both fluorescent and LED lighting fixtures equipped with 0–10 Vdc dimming circuitry are connected to controller analog outputs. PRC-E controllers include backlit color LCD touchscreen and Maintenance Ethernet port for local programming, system monitoring and override control. User can access the controller preconfigured Web pages or use Pow-R-Command software using the controller front Maintenance port. Laptop is connected to the controller using an industry standard patch cable. Network connections for RS-485 and Ethernet provide remote connection options.

Standard circuit breakers can be mounted to feed non-controlled loads.

Low voltage regulated power supply provides stable power for system electronics and reliable switching of solenoid-operated controllable circuit breakers.

Breaker Control Bus (BCB) electronics provide the control and monitoring interface between Pow-R-Command controllers and solenoid-operated controllable circuit breakers.

Single- and multi-pole solenoid-operated controllable circuit breakers provide branch circuit protection and control of connected loads.

Pow-R-Command Expansion Panelboard

Expansion Panelboard (PRCEP) includes Breaker Control Bus electronics and solenoid-operated controllable circuit breakers. Master and Expansion Panelboards are connected via SLAN communications sub-network to provide a scalable system architecture for cost-effective control solutions.

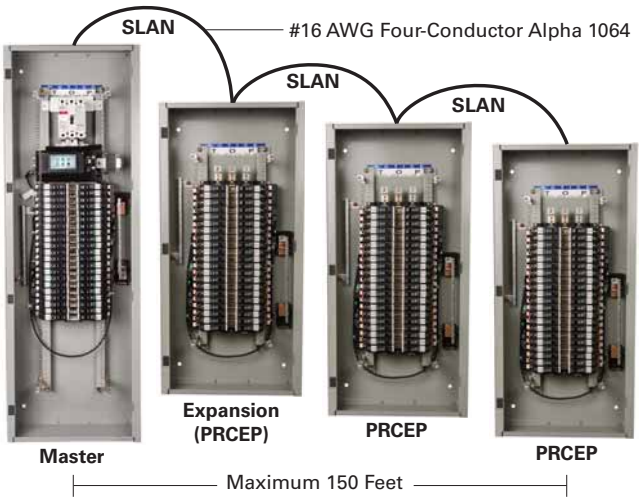

Consult factory for applications requiring longer distances.

Pow-R-Command Controllers

Pow-R-Command Intelligent Panelboards integrate branch circuit protection and control into a single panelboard enclosure to eliminate the need for mounting external time clocks with contactors or relay panels. Four 5th generation PRC-E series controller models are available to allow users and specifiers to select the controller that best fits the application.

PRC750E

- Microprocessor-based programmable lighting and energy management system intended for standalone applications
- Designed with the electrical contractor in mind, it offers integral back-lit color LCD touchscreen display for simple, straightforward commissioning and startup
- Front panelboard programming can also be achieved by connecting the controller maintenance port to a laptop using an industry standard Ethernet patch cable
- Preconfigured Web pages or PC software can be used to program, monitor and override the system
- Control options include schedule-based, occupant override and photocell control
- Sixteen two-wire low voltage inputs are available for connecting wall stations, occupancy sensors and photocells
- Each controller can be connected to three Expansion Panelboards via SLAN communications to control and monitor up to 168 solenoid-operated circuit breakers

PRC1000E

Includes all the features of the PRC750E controller with the addition of:

- Up to 120 controllers can be connected to the same Pow-R-Command RS-485 peer-to-peer network
- Powerful peer-to-peer protocol and network architecture allows schedules and external wiring device signals to be broadcast over the network to control any or all of the solenoid-operated controllable circuit breakers connected to the system. This system capability eliminates the need for changing the same schedule in multiple panelboards and requiring additional wiring devices to be directly connected to specific controllers
- Eight universal inputs can be programmed to accept either digital or analog external wiring devices. Compatible with low voltage digital wiring devices like wall stations, occupancy sensors and photocells when programmed as digital inputs. When programmed as 0–10 Vdc analog inputs, indoor and outdoor photosensors can be connected for dimming and daylight harvesting applications
- Eight analog 0–10 Vdc outputs for connecting to fluorescent and LED lighting fixtures equipped with 0–10 Vdc dimming circuitry to meet dimming and daylight harvesting application requirements
- Compatible with existing PRC1000 systems

PRC1500E

Includes all the features of the PRC1000E controller with the addition of:

- Ethernet communications
- BACnet/IP communications protocol for integrating into building management systems

PRC2000E

Includes all the features of the PRC1500E controller with the addition of:

- Remote access to preconfigured Web pages for programming, system monitoring and override control via Ethernet network connection
- Compatible with existing PRC2000 systems

PRC-E Controller Features

Controller	PRCEP	PRC750E	PRC1000E	PRC1500E	PRC2000E
Inputs					
Dry contact inputs		16	8	8	8
Universal (dry contact or analog 0–10 Vdc)			8	8	8
Switch Override Controller (SOC) compatible			60	60	60
Outputs					
Analog (0–10 Vdc)			8	8	8
Maximum number of dimming ballasts/drivers per analog output			40	40	40
Power supply for external devices (100 mA)			12 Vdc/30 Vac	12 Vdc/30 Vac	12 Vdc/30 Vac
Maximum number of breaker control bus		8	8	8	8
Maximum number of controllable breakers		168	168	168	168
Control Logic					
Maximum number of logic control groups		16	100	100	100
365-day time clock		■	■	■	■
Astronomical time clock with sunrise and sunset offsets		■	■	■	■
Schedules		250	250	250	250
On/Off per schedule per day		250	250	250	250
Holidays		30	30	30	30
Automatic daylight savings time		■	■	■	■
Blink notice		■	■	■	■
Override time for switch inputs (min./max.)		1 min to 10 hrs	1 min to 10 hrs	1 min to 10 hrs	1 min to 10 hrs
Dimming and daylight harvesting			■	■	■
Configurable source logic using software (OR, AND, XOR, XNOR, NAND, LAST EVENT) ①			■	■	■
Communications					
Expansion Panelboard SLAN		■	■	■	■
Maximum Breaker Control Bus (BCB) per SLAN		8	8	8	8
Digital Switch Network			■	■	■
Pow-R-Command peer-to-peer RS-485			■	■	■
Maximum controllers per RS-485 network			120	120	120
Pow-R-Command peer-to-peer Ethernet				■	■
Remote access to preconfigured Web pages using Ethernet network connection (TCP/IP server)					■
BACnet/IP				■	■
Modbus RTU RS-485 (Breaker Control Bus addresses 1–16)	■				
Front Panelboard Programming					
Front Maintenance Port (Ethernet)		■	■	■	■
4.3-inch backlit color LCD touchscreen		■	■	■	■
Access to preconfigured Web pages via maintenance port (TCP/IP)		■	■	■	■
Software		■	■	■	■
Password protection		■	■	■	■
Memory					
RAM memory for programs and configuration (MB)		128	128	128	128
Flash memory for kernel, programs and file system (MB)		256	256	256	256
SD card for logs and programming database (GB)		4	4	4	4
USB port for firmware upgrades, etc.		■	■	■	■
On-board capacitor to power clock chip during power outage (days)		10	10	10	10
Standards					
UL 916 energy management equipment		■	■	■	■
California Title 24		■	■	■	■
UL 67 panelboards		■	■	■	■
CSA C22.2 #29 panelboards		■	■	■	■
UL 489 circuit breakers		■	■	■	■

Note

① Requires software.

Product Selection

PRC-E Controller

Pow-R-Command "E" Series controllers are available in four models and offer a range of features to meet a broad range of applications and meet energy codes. Each PRC-E controller includes a backlit color LCD touchscreen, SLAN expansion network, schedule-based controls and two-wire low voltage inputs for connecting occupancy sensors, wallstations and other building control signals. The PRC-E Controller Selection Guide may be used to quickly identify the controller that best fits the application. The PRC-E Controller Features table on the previous page provides greater detail for the specifier that may be interested in specific controller details.

PRC-E Controller Selection Guide ①

Description	Catalog Number
Standalone operation, schedule-based control, occupant override control and Master/Expansion SLAN	**PRC750E**
RS-485 network, digital switch network, dimming and daylight harvesting control	**PRC1000E**
PRC1000E features plus Ethernet network and BACnet/IP protocol	**PRC1500E**
PRC1500E features plus remote accessible preconfigured Web pages	**PRC2000E**

Note

① PRC-E controllers are compatible and recommended for existing Pow-R-Command systems with the same preceding model number, i.e., PRC1000 is compatible with PRC1000E.

Externally Mounted Controllers

Externally mounted controllers (PRCEEC) are available for retrofit and renovation projects when existing panelboards do not have required controller mounting space. Externally mounted controllers include controller and control power transformer mounted in a NEMA 1 enclosure. Eaton Pow-R-Line 1a and 2a lighting panelboards can be converted to Pow-R-Command Expansion Panelboards (PRCEP) in the field by mounting Breaker Control Bus (BCB) and controllable circuit breakers directly to the interior. Externally mounted controllers are connected to the retrofitted PRCEP panelboard using the SLAN communications network.

PRCE Externally Mounted Controller

PRCE Externally Mounted Controllers

Controller Type	Connected System Voltage	Catalog Number
PRC750E with display	120 Vac	**PRC750EECD-120**
PRC750E with display	277 Vac	**PRC750EECD-277**
PRC1000E with display	120 Vac	**PRC1000EECD-120**
PRC1000E with display	277 Vac	**PRC1000EECD-277**
PRC1500E with display	120 Vac	**PRC1500EECD-120**
PRC1500E with display	277 Vac	**PRC1500EECD-277**
PRC2000E with display	120 Vac	**PRC2000EECD-120**
PRC2000E with display	277 Vac	**PRC2000EECD-277**

PRC-E Controller Backlit Color LCD Touchscreen

PRC-E controller backlit color LCD touchscreen display (PRCELCD) provides the user with a means for front panel programming, status monitoring and override control. PRCELCD is compatible with PRC-E controllers and can be factory or field installed. Users can safely access the controller low voltage compartment by loosening two captive screws located on the top corners of the display and folding the display down.

PRCELCD features include:

- Mounting plate and hardware
- High image quality a-Si TFT LCD module
- Resistive type touch panel
- 4.3-inch diagonal display with 16:9 aspect
- 16.7M colors
- High contrast, high brightness
- Captive screws and hinge for easy access to controller low voltage compartment

PRC-E Controller LCD Touchscreen

PRC-E Controller LCD Touchscreen

Description	Catalog Number
PRCE backlit LCD touchscreen with mounting plate	**PRCELCD**

Breaker Control Bus

Breaker Control Bus (BCB) provides the electronic interface and power switching signal between the controller and solenoid-operated controllable circuit breaker. BCB comes in three lengths to fit standard lighting panelboards and is mounted to the panelboard interior rails. Each BCB has a set of DIP switches to configure the device SLAN address between 1 and 8. BCBs are connected to the PRC-E controller using PRC-to-BCB and BCB-to-BCB SLAN cables in a daisy-chain network architecture. RUN, SLAN and PWR LEDs indicate BCB operating status.

Breaker Control Bus (BCB)

Breaker Control Bus (BCB)

Description	Controlled Circuits	Catalog Number
9-circuit Breaker Control Bus	9	**PRC1000BCB-9R**
18-circuit Breaker Control Bus	18	**PRC1000BCB-15R**
21-circuit Breaker Control Bus	21	**PRC1000BCB-21R**

Controller and Breaker Control Bus SLAN Cables

Controller and BCB SLAN cables are used for connecting controllers to associated BCBs. Each cable type is made in three lengths using Alpha 1064 4-conductor #16 AWG wire. One pair of wires used for 30 Vac power with the second pair used to transmit and receive communications with connected controller.

Controller and Breaker Control Bus SLAN Cables

Controller and Breaker Control Bus SLAN Cables

Description	Catalog Number
Controller-to-BCB / 42-circuit	**PRCSLAN42**
Controller-to-BCB / 30-circuit	**PRCSLAN30**
Controller-to-BCB / 18-circuit	**PRCSLAN18**
Controller-to-BCB / 42-circuit with right BCB only	**PRCSLAN42R**
Controller-to-BCB / 30-circuit with right BCB only	**PRCSLAN30R**
Controller-to-BCB / 18-circuit with right BCB only	**PRCSLAN18R**
BCB-to-BCB / 42-circuit	**PRCSLAN42B**
BCB-to-BCB / 30-circuit	**PRCSLAN30B**
BCB-to-BCB / 18-circuit	**PRCSLAN18B**

Auxiliary Power Supply

Auxiliary Power Supply (PRCPS) is used to boost power on the SLAN. Master and Expansion Panelboards communicate over the SLAN via Alpha 1064 4-conductor #16 AWG cable. Recommended maximum SLAN length is 150 ft. One pair of wires provides power to BCB for switching controllable circuit breakers with the second pair used for controller to BCB RS-485 communications. The PRCPS can be used to power a single Expansion Panelboard or extend the SLAN an additional 150 ft. The SLAN can be extended up to 4,000 ft by using a PRCPS in each PRCEP.

Auxiliary Power Supply

Auxiliary Power Supply

Description	Catalog Number
PRC power supply 96 VA with 120/277 Vac input and 30 Vac output voltage	**PRCPS**

Controllable Circuit Breakers

GHQRD ①

	Number of Poles	Ampere Rating	Interrupting Capacity (Symmetrical Amperes) Vac (50/60 Hz) 120	120/240	277	277/480	Catalog Number
Single-Pole	1	15	65,000	65,000	14,000	—	**GHQRD1015**
		20	65,000	65,000	14,000	—	**GHQRD1020**
		30	65,000	65,000	14,000	—	**GHQRD1030**
Two-Pole	2	15	65,000	65,000	----	14,000	**GHQRD2015**
		20	65,000	65,000	----	14,000	**GHQRD2020**
		30	65,000	65,000	----	14,000	**GHQRD2030**

Note

① Not recommended for existing PRC25, PRC100, PRC750, PRC1000 and PRC2000 systems. GHQRSP controllable circuit breakers are compatible with these systems.

GHQRSP ①

	Number of Poles	Ampere Rating	Interrupting Capacity (Symmetrical Amperes) Vac (50/60 Hz) 120	120/240	277	277/480	Catalog Number
Single-Pole	1	15	65,000	65,000	14,000	—	**GHQRSP1015**
		20	65,000	65,000	14,000	—	**GHQRSP1020**
		30	65,000	65,000	14,000	—	**GHQRSP1030**
Two-Pole	2	15	65,000	65,000	—	14,000	**GHQRSP2015**
		20	65,000	65,000	—	14,000	**GHQRSP2020**
		30	65,000	65,000	—	14,000	**GHQRSP2030**

BABRSP ②

	Number of Poles	Ampere Rating	Interrupting Capacity (Symmetrical Amperes) Vac (50/60 Hz) 120	120/240	Catalog Number
Single-Pole	1	15	10,000	—	**BABRSP1015**
		20	10,000	—	**BABRSP1020**
		30	10,000	—	**BABRSP1030**
Two-Pole	2	15	—	10,000	**BABRSP2015**
		20	—	10,000	**BABRSP2020**
		30	—	10,000	**BABRSP2030**
		40	—	10,000	**BABRSP2040**
		50	—	10,000	**BABRSP2050**

Notes

① Compatible with existing PRC25, PRC100, PRC750(E), PRC1000(E), PRC1500(E) and PRC2000(E) systems. Recommend using GHQRD controllable circuit breakers for PRC-E systems.

② Compatible with PRC25, PRC100, PRC750(E), PRC1000(E), PRC1500(E) and PRC2000(E) systems. Recommend using BABRP controllable circuit breakers for PRC25 systems.

BABRP ①

	Number of Poles	Ampere Rating	Interrupting Capacity (Symmetrical Amperes) Vac (50/60 Hz) 120	120/240	Catalog Number
Single-Pole	1	15	10,000	----	**BABRP1015**
		20	10,000	----	**BABRP1020**
		30	10,000	----	**BABRP1030**
Two-Pole	2	15	----	10,000	**BABRP2015**
		20	----	10,000	**BABRP2020**
		30	----	10,000	**BABRP2030**
		40	----	10,000	**BABRP2040**

Emergency Circuit Breaker

The GHQRDEL and GHQRSPEL controllable circuit breakers are designed to meet NEC 700.12(F) for sources of power in unit equipment used for emergency lighting applications. The controllable circuit breaker includes both switched circuit for controlling lighting and standard non-switched circuit to provide power to the unit emergency charging and detection circuitry. Controllable circuit breaker includes a common handle tie and a common trip mechanism.

GHQRD Emergency Circuit Breaker ②

Emergency Circuit Breaker

Number of Poles	Ampere Rating	Interrupting Capacity (Symmetrical Amperes) Vac (50/60 Hz) 277	277/480	Catalog Number
2	15	14,000	—	**GHQRDEL2015**
	20	14,000	—	**GHQRDEL2020**

GHQRSP Emergency Circuit Breaker ③

Emergency Circuit Breaker

Number of Poles	Ampere Rating	Interrupting Capacity (Symmetrical Amperes) Vac (50/60 Hz) 277	277/480	Catalog Number
2	15	14,000	—	**GHQRSPEL2015**
	20	14,000	—	**GHQRSPEL2020**

Notes

① Not compatible with PRC750(E), PRC1000(E), PRC1500(E) and PRC2000(E) systems.

② Compatible with PRC750E, PRC1000E, PRC1500E and PRC2000E systems. Not recommended for existing PRC100, PRC750, PRC1000 and PRC2000 systems. GHQRSPEL controllable circuit breakers are compatible with these systems.

③ Compatible with PRC750(E), PRC1000(E), PRC1500(E) and PRC2000(E) systems. Not recommended for existing PRC100, PRC750, PRC1000 and PRC2000 systems. GHQRSP controllable circuit breakers are compatible with these systems.

Pow-R-Command Switches

Digital Switches

Pow-R-Command Digital Switches (PRCDS) are used for occupant override and light level control. PRCDS include digital and analog I/O and 12 Vdc external power source for connecting field wiring devices. The 12 Vdc external power source is used to power an occupancy sensor and digital input for monitoring occupancy status. Analog input is used to connect a light level sensor analog output for controlling up to 30 fluorescent ballasts or LED drivers. Digital switches are connected to controllers' Digital Switch Network (DSN) via CAT6 cable with 23 AWG wire using standard RJ45 connectors. Each controller DSN supports connecting up to 99 digital switches. Onboard rotary switches allow addresses to be set in the field. LED backlit buttons provide real-time breakers and/or groups status. Each digital switch can have a title description using up to 16 characters. Pushbutton labels can have up to four characters. Standard font type is Helvetica regular bold.

Front View

Back View

Six-Button

Six-Button Engraved

Digital Switches ①②

Color	Number of Buttons	Catalog Number
Black	2	**PRCDS2B**
	4	**PRCDS4B**
	6	**PRCDS6B**
White	2	**PRCDS2W**
	4	**PRCDS4W**
	6	**PRCDS6W**
Almond	2	**PRCDS2A**
	4	**PRCDS4A**
	6	**PRCDS6A**
Ivory	2	**PRCDS2V**
	4	**PRCDS4V**
	6	**PRCDS6V**

Notes

① Not compatible with PRC750(E) controllers. Recommended for PRC1000(E), PRC1500(E) and PRC2000(E) controllers.
② Contact factory for custom labeling.

Digital Switch I/O Configuration

Pushbutton Configuration	Analog Input 0–10 Vdc	Digital Input 0–10 Vdc	Analog Output 0–10 Vdc	12 Vdc Output 20 mA Maximum
Two-button	■	■	■	■
Four-button	■	■	■	■
Six-button	■	—	■	■

Digital Switch Network Splitter

Digital Switch Network Splitter (PRCDSNS) is used as a convenient way to split the DSN into 2 legs to span in two directions.

If there are more than 50 Digital Switches connected to a controller, a splitter is recommended.

Consult factory for applications that may require this device.

Digital Switch Network Splitter

Digital Switch Network Splitter

Description	Catalog Number
Digital Switch Network Splitter	**PRCDSNS**

Digital Switch Network Power Injector

Digital Switch Network Power Injector (PRCDSNPI) is used to provide 24 Vac power on the DSN. A PRCDSNPI should be installed on the DSN before every 16th PRCDS or before the total length of DSN reaches 500 ft (whichever comes first).

Digital Switch Network Power Injector

Digital Switch Network Power Injector

Description	Catalog Number
Digital Switch Network Power Injector	**PRCDSNPI**

Low Voltage Switch

Pow-R-Command Low Voltage Switch (PRCLS) includes momentary dry-contact pushbuttons used for inputs into the controller. PRCLS directly connect to controller digital and universal inputs.

Each PRCLS can have a title description using up to 16 characters. Pushbutton labels can have up to four characters. Standard font type is Helvetica regular bold.

Low Voltage Switch

Termination Board

Low Voltage Switch ①

Color	Number of Buttons	Catalog Number
Black	2	**PRCLS2B**
	4	**PRCLS4B**
	6	**PRCLS6B**
White	2	**PRCLS2W**
	4	**PRCLS4W**
	6	**PRCLS6W**
Almond	2	**PRCLS2A**
	4	**PRCLS4A**
	6	**PRCLS6A**
Ivory	2	**PRCLS2V**
	4	**PRCLS4V**
	6	**PRCLS6V**

Switch Wallplates

Fits rocker-style Decorator, Decora style switches. Screwless design is available in black, white, almond and ivory for 1-, 2- and 3-switch designs.

Switch Wallplates

Switch Wallplates

Color	Number of Switches	Catalog Number
Black	1	**PRCSWP1B**
	2	**PRCSWP2B**
	3	**PRCSWP3B**
White	1	**PRCSWP1W**
	2	**PRCSWP2W**
	3	**PRCSWP3W**
Almond	1	**PRCSWP1A**
	2	**PRCSWP2A**
	3	**PRCSWP3A**
Ivory	1	**PRCSWP1V**
	2	**PRCSWP2V**
	3	**PRCSWP3V**

Note

① Consult factory for custom labeling.

Pow-R-Command Switch Override Controller

The Pow-R-Command Switch Override Controller (PRCSOC) can be used to connect digital and analog I/O to Pow-R-Command systems. This device is recommended when controller onboard digital and analog I/O has been exceeded or when there is an advantage to connecting remote I/O via a network connection. The PRCSOC is supplied with the controller, termination board in a NEMA 1 enclosure. Dual voltage 120/277 Vac power supply and 32-status LED output card are optional.

The PRCSOC is connected to the Pow-R-Command system via the RS-485 network. Status and command signals are sent to the system using Pow-R-Command peer-to-peer protocol. The PRCSOC is configured using Pow-R-Command Lighting Optimization Software.

All digital and analog I/O is connected using #18 AWG with maximum of 500 ft length. The PRCSOC features include:

- Sixty low voltage two-wire switch inputs for connecting wall stations, occupancy sensors and control relay outputs from building management systems
- Eight low voltage two-wire universal (digital or analog) inputs. Analog field devices like light level sensors with 0–5 Vdc outputs can be connected for dimming and daylight harvesting applications
- Three low voltage 0–10 Vdc analog outputs for controlling fluorescent and LED light fixtures equipped dimming circuitry; maximum of 40 each per output with optional dimmer cables
- Sixteen low voltage two-wire 24 Vdc outputs to power status LEDs; optional to add 32 low voltage two-wire 24 Vdc outputs to power status LEDs
- External 15 Vdc power source for powering occupancy and light level sensors and PRC auxiliary devices
- Connects to Pow-R-Command RS-485 network
- Communicates to the system using Pow-R-Command peer-to-peer protocol
- Configured by using Pow-R-Command Lighting Optimization Software
- Provided in a NEMA 1 enclosure
- Not compatible with PRC750(E) controllers

Pow-R-Command Switch Override Controller

Pow-R-Command Switch Override Controller

Description	Catalog Number
PRC Switch Override Controller without power supply mounted in NEMA 1 enclosure	**PRCSOCC**
PRC Switch Override Controller w/ 120/277 Vac power supply mounted in a NEMA 1 enclosure	**PRCSOCEC**
PRC Switch Override Controller w/ 120/277 Vac power supply, pilot output card mounted in a NEMA 1 enclosure	**PRCSOCECO**

Accessories

Ethernet Interface Module

Pow-R-Command Ethernet Interface Module (PRCEIM) allows access to the PRC controller RS-485 network when using a PC connected directly to the EIM Ethernet port or connected on a facility's Ethernet network.

PRCEIM can be used as the master scheduler and includes 250 unique schedules. The PRCEIM can be programmed to sync controller time clocks. This device is connected to the Ethernet network using standard CAT5 cable. The three-pin connector is used to directly connect to the Pow-R-Command RS-485 controller network.

The PRCEIM comes in a table top enclosure and should be physically located near an Ethernet hub or repeater, but the PC can be located anywhere on the Ethernet network. The PRCEIM will communicate at 10Base-T and must have a fixed IP address assignment on the Ethernet network.

Ethernet Interface Module

Ethernet Interface Module ①

Description	Catalog Number
PRC Ethernet Interface Module mounted in table top enclosure	**PRCEIM**

Note

① Not compatible with PRC750(E) controllers. Recommended for PRC100 and PRC1000(E) controllers.

BACnet Interface Module

Pow-R-Command BACnet Interface Module (PRCBIM-1) is designed for simple BACnet integration without the need for extensive BACnet knowledge. The device maps Pow-R-Command controller points to BACnet/IP points of any RS-485 network connected Pow-R-Command controller. The PRCBIM-1 can map up to 50 points. These points include status and control of individual controllable circuit breakers and groups of controllable circuit breakers. Input status is also included in the points map. Programming the device is accomplished by using Pow-R-Command Lighting Optimization Software (PRCLOS). The PRCBIM-1 includes two network connections. The RS-485 connection is used for connecting the Pow-R-Command RS-485 network while the Ethernet 10Base-T connection is used for connecting to the facility Ethernet network. The device requires a fixed IP address to be configured before connecting to the network.

BACnet Interface Module

BACnet Interface Module ①

Description	Catalog Number
PRC BACnet Interface Module	**PRCBIM-1**

BACnet Shadow Server

Pow-R-Command BACnet Shadow Server (PRCSS) is designed for simple BACnet integration without the need for extensive BACnet knowledge. The PRCSS maps Pow-R-Command controller points to BACnet/IP points. Up to 120 devices can be connected to a system. Each PRCSS has full access to all 150 points of the directly connected Pow-R-Command controller. These points include status and control of individual controllable circuit breakers and groups of controllable circuit breakers. Input status is also included in the points map. Programming the device is accomplished by using Pow-R-Command Lighting Optimization Software (PRCLOS). The PRCSS includes two network connections. The RS-485 connection is used for connecting the Pow-R-Command RS-485 network while the Ethernet 10Base-T connection is used for connecting to the facility Ethernet network.
The PRCBIM-1 includes two network connections. The RS-485 connection is used for connecting the RS-485 network while the Ethernet 10Base-T connection is used for connecting to the facility Ethernet network. The device requires a fixed IP address to be configured before connecting to the network. Device power is supplied by controller 12 Vdc external power source.

BACnet Shadow Server

BACnet Shadow Server ①

Description	Catalog Number
PRC BACnet Shadow Server	**PRCSS**

Note

① Not compatible with PRC750(E) controllers. Recommended for PRC100 controllers. Consult factory for PRC1000(E) controllers.

Universal Ethernet Interface

The Pow-R-Command Universal Ethernet Interface (PRCUEI) is used in conjunction with the PRC5000 Advanced Lighting Controller to connect multiple RS-485 networks using the facility's Ethernet network via TCP protocol. The PRC5000 can connect up to 16 Pow-R-Command RS-485 networks using a PRCUEI to connect each network. The PRCUEI supports up to 120 Pow-R-Command devices on each RS-485 network.

The device power is supplied by the controller 12 Vdc external power connection.

PC Central Software (PRCPCC01) is required for configuration and programming.

Universal Ethernet Interface

Universal Ethernet Interface ①

Description	Catalog Number
PRC Universal Ethernet Interface	**PRCUEI**

Universal Ethernet Router

Universal Ethernet Router PRCUER is intended for facilities where an Ethernet network is already installed.

The PRCUER extends the Pow-R-Command controller network by tunneling Pow-R-Command controller LAN control packets over existing Ethernet network using UDP Ethernet protocol. PRCUER devices extend the controller LAN transparently across Ethernet segments within the same subnet, allowing segments of the controller network to be physically separated from each other within a facility. Programming the device is accomplished by using Pow-R-Command Lighting Optimization Software (PRCLOS).
The PRCUER includes two network connections.

The RS-485 connection is used for connecting the Pow-R-Command RS-485 network while the Ethernet 10Base-T connection is used for connecting to the facility Ethernet network.
The device can be configured for DHCP or be assigned a static IP address. Device power is supplied by controller 12 Vdc external power source.

Universal Ethernet Router

Universal Ethernet Router ①

Description	Catalog Number
PRC Universal Ethernet Router	**PRCUER**

Note

① Not compatible with PRC750(E) controllers. Recommended for PRC100 and PRC1000(E) controllers RS-485 networks.

PRC5000 Building Automation Controller

Pow-R-Command 5000 (PRC5000) is a microprocessor-based lighting control and energy management controller. It is capable of communicating with other Pow-R-Command system devices for providing advanced control strategies including master schedules and demand response.

Custom equipment performance and energy usage reports can be configured and automatically sent to the facility manager via email notification. These reports may be used to measure and verify that equipment is performing as designed and delivering expected energy savings.

The PRC5000 controller is commonly used to serve facility custom graphics via Web pages. Authorized users can log into the device using a standard Web browser for viewing the custom graphics. System schedule changes and override controls can be made at the click of a button.

PRC5000E

PRC5000 Building Automation Controller

Description	Catalog Number
PRC5000 Building Automation Controller	**PRC5000E**
PRC5000 Building Automation Controller with modem	**PRC5000EM**

PRC25 Controller

PRC25 controller and associated system components are available for repair and replacement. Consult factory for more information.

PRC25

PRC25 Controller

Description	Catalog Number
PRC25 4-channel controller	**MTM-4**
PRC25 6-channel controller	**MTM-6**

Lighting Optimization Software

Lighting Optimization Software (PRCLOS) is recommended for Pow-R-Command system users. It is compatible with PRC100, PRC750(E)①, PRC1000(E), PC1500(E) and PRC2000(E) systems. PRCLOS controllers only through the front Maintenance port using a PRCSmartCable. allows users to set up, program and monitor their system. This basic software package is capable of recognizing and saving databases for a single site.

Lighting Optimization Software ①

Description	Catalog Number
PRC Lighting Optimization Software	**PRCLOS**

Building Graphics Software

Building Graphics Software (PRCBGS) is a fully interactive object oriented graphics interface for controlling and monitoring Pow-R-Command lighting control and energy management systems. The integrator can create and depict objects such as light fixtures, switches, occupancy sensors, light sensors, floor plans, etc. PRCBGS provides server graphic Web pages over local Ethernet connection to any computer using a standard Internet browser. PRCBGS requires the installation of PC Central (PRCPCC01/ PRCPCC10).

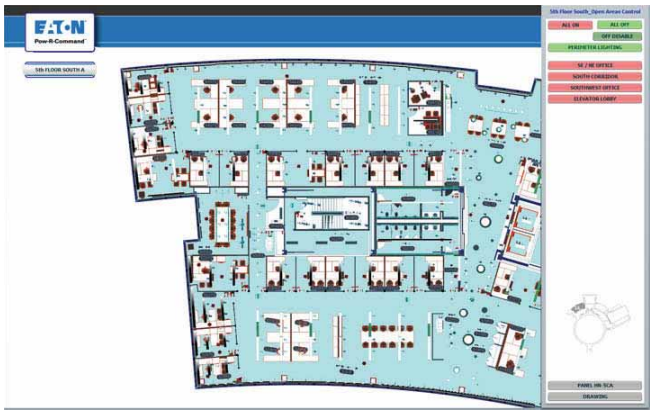

Building Graphics Software

Description	Catalog Number
PRC Building Graphics Software	**PRCBGS**

Note

① Remote network connection not available. Requires direct connection to controller Maintenance port. PRC750 connection requires PRCSmartCable. PRC750E connection requires industry standard patch cable.

PC Central Software

PC Central Software (PRCPCC) is recommended for field technicians responsible for maintaining Pow-R-Command systems. It is compatible with PRC100, PRC750 (E)①, PRC1000(E), PC1500(E) and PRC2000(E) systems. PRCPCC allows users to set up, program and monitor their system with the added features of advanced diagnostics and programming capabilities. This advanced software package is capable of recognizing and saving databases for single or multiple sites.

PC Central Software

Description	Catalog Number
PC Central Software (single site)	**PRCPCC01**
PC Central Software (10 sites)	**PRCPCC10**

Site Server Software

Pow-R-Command Site Server (PRCSSS) integrates the PC Central suite of management tools with the Internet or Intranet. The users have real-time global access to the Pow-R-Command systems through the Internet. PRCSSS allows multiple users access to historical data, device status and control, and graphical display interfaces.

Any computer on the network with PRCSSS can access real-time dynamically refreshed data using a browser implementing appropriate Web standards (Netscape Navigator or Internet Explorer). Special software other than the browser is not required. PC Central is required to run this application software.

Site Server Software

Description	Catalog Number
PRC Site Server Software	**PRCSSS**

Desktop Computer

Recommended Minimum Computer Specifications

Although it is difficult to guarantee compatibility with all PC-compatible equipment, the basic installation is generally compatible with the following minimum specifications:

- Microsoft® Windows® operating system
- 1GHz processor or better
- At least 40 MB of unused RAM
- Hard drive with at least 100 MB of free space plus 50 MB for each site to be managed
- Ethernet network adapter
- 800 x 600 monitor
- CD-ROM drive

Lighting Optimization Software and PC Central Software is compatible with the following operating systems:

- Windows 98 Second Edition
- Windows 2000 Professional
- Windows 2000 Server
- Windows 2003 Server
- Windows XP Home Edition
- Windows XP Professional Edition
- Windows Vista (all versions)
- Windows 7
- Windows 10

Desktop Computer

Description	Catalog Number
PRC desktop computer	**PRCDesktop**
PRC Laptop Computer	**PRCLaptop**

Smart Cable Programming Tool

Pow-R-Command Smart Cable (PRCSmartCable) is used for front panelboard programming PRC100, PRC750, PRC1000 and PRC2000 controllers. The PRCSmartCable connects the local laptop USB port to controller maintenance port.

Smart Cable Programming Tool

Description	Catalog Number
PRC smart cable	**PRCSmartCable**

Note

① Remote network connection not available. Requires direct connection to controller maintenance port. PRC750 connection requires PRCSmartCable. PRC750E connection requires industry standard patch cable.

Metering Service Section

Contents

Description ***Page***

Metering Service Sections

Catalog Number Selection **V2-T3-128**
Product Selection **V2-T3-128**
Technical Data and Specifications. **V2-T3-129**
Dimensions **V2-T3-129**

Product Description

- 600 Vac maximum
- Three-phase four-wire, three-phase three-wire, single-phase three-wire.
- Service entrance panel combining a main disconnect with a power company metering compartment
- Circuit breaker or fusible switch disconnect
- 400–1200A ratings
- Provision for power company metering:
  - Hinged sealable door over CT section
  - Arranged for bar-type, 200–1200A utility-furnished CTs
  - Barriered CT compartment
- Factory assembled
- Wallmounted enclosure

Application Description

- For use in areas where the disconnect and current transformer combination is required by utilities
- Suitable for use as Service Entrance Equipment
- Top or bottom entrance
- Hot or cold sequence metering
- The current transformer compartment will accommodate the following 12-inch (304.8 mm) bar-type CTs:

Bar-Type CTs

ABB	General Electric	Sangamo	Astra
CTB	JCT-10	R6B	TAB, TA
CSF	JCM-0	R6BA	TCB, AA
CMF	JCW-0	R6M	AB
CBH	JAK-0		

Standards and Certifications

- UL 67, UL 50
- NEC

Listed

Catalog Number Selection

Panelboard Catalog Number Selection Guide ①

WBM DK 2 4 A

Panel Type
WSM = Fusible switch
WBM = Circuit breaker

Device Type
FDPW = Fusible switch
Circuit breaker = (See table below)

Service and Voltage
2 = Single-phase three-wire
3 = Three-phase three-wire
4 = Three-phase four-wire

Ampere Rating
4 = 400A
6 = 600A
8 = 800A
12 = 1200A

Bus Bar Type
A = Aluminum
C = Copper

Example: WBMDK24A

WBM = Circuit breaker type, **DK** = Circuit breaker type from table below, **2** = Single-phase three-wire, **4** = 400A, **A** = Aluminum bus bar.

Product Selection

Metering Service Section

Type WBM Circuit Breaker Sections

Max. Ampere Rating	Interrupting Rating (kA Symmetrical) 240 Vac	480 Vac	600 Vac	Breaker Type ②③	Base Catalog Number ④
400	65	—	—	DK	**WBMDK**
400	65	35	25	KD	**WBMKD**
400	100	65	35	HKD	**WBMHKD**
400	200	100	50	KDC	**WBMKDC**
400	200	200	—	LCL	**WBMLCL**
600	65	35	25	LD	**WBMLD**
600	100	65	35	HLD	**WBMHLD**
600	200	100	50	LDC	**WBMLDC**
800	65	50	25	MDL	**WBMMDL**
800	100	65	35	HMDL	**WBMHMDL**
800	65	50	25	ND	**WBMND800**
800	100	65	35	HND	**WBMHND800**
1200	65	50	25	ND	**WBMND1200**
1200	65	50	25	NDG ⑤	**WBMNDG1200**
1200	100	65	35	HND	**WBMHND1200**
1200	100	65	35	HNDG ⑤	**WBMHNDG1200**

Notes

① Refer to Hartford Satellite Plant.
② For other breaker types, refer to Hartford Satellite Plant.
③ In cold sequence metering only, a 10X or 18X feeder breaker section can be supplied downstream from the CT compartment. Refer to Hartford Satellite Plant.
④ Complete catalog number according to Catalog the Number Selection Guide—table above.
⑤ Integral ground fault.

WSM Fusible Switch Sections

Ampere Rating	Interrupting Rating (kA Symmetrical)	Fusible Switch ①	Base Catalog Number ②
240 Vac Fusible Devices ③			
400	Refer to table on right (FDPW Switch Ratings, 250 or 600 Vac)	FDPW	**WSMFDPW**
600		FDPW	**WSMFDPW**
800		FDPW	**WSMFDPW**
1200		FDPW	**WSMFDPW**
600 Vac Fusible Devices ③			
400	Refer to table on right (FDPW Switch Ratings, 250 or 600 Vac)	FDPW	**WSMFDPW**
600		FDPW	**WSMFDPW**
800		FDPW	**WSMFDPW**
1200		FDPW	**WSMFDPW**

Modifications

Modifications for WBM Metering Service Sections

Description
Copper bus
Circuit breaker shunt trip installed
Circuit breaker undervoltage release installed
Type 3R outdoor enclosure
Provisions for PTs

Modifications for WSM Metering Service Sections

Description
Copper bus
Shunt trip installed
Type 3R outdoor enclosure
Provisions for PTs
FDPW fusible switch ground fault system Includes zero sequence current monitor, static sensor, shunt trip and fused control power transformer

Technical Data and Specifications

FDPW Switch Ratings, 250 or 600 Vac

Ampere Rating	Fuse Class Used ①	Short-Circuit Ratings (kA Sym.)
400, 600	R	200
400, 600	J ③	200
800, 1200	L	200

Dimensions

Approximate Dimensions in Inches (mm)

Note: Not to be used for construction purposes unless approved.

Type 1 Enclosure—Metering Service Section

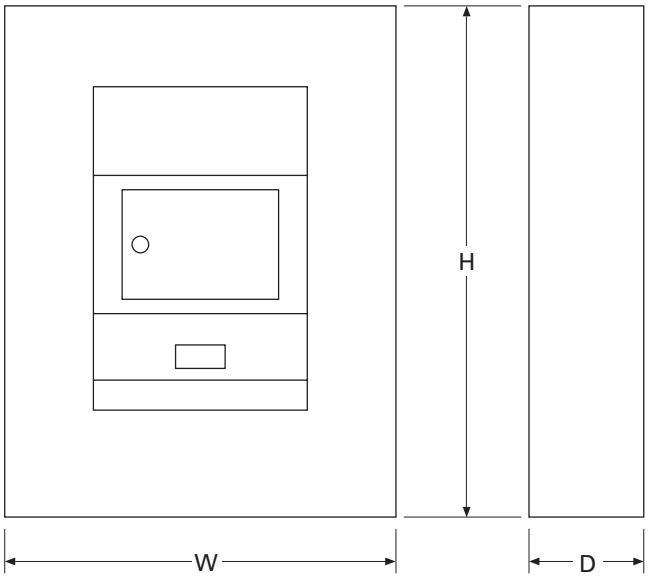

Type 1 Enclosure

Panelboard Type	Ampere Rating	Enclosure Dimensions Height	Width	Depth	Box Catalog Number
WBM, Circuit breaker	400–1200	73.50 (1866.9)	36.00 (914.4)	11.31 (287.0)	**BX3673**
WSM, Fusible	400–1200	90.50 (2286.0)	36.00 (914.4)	11.31 (287.0)	**BX3690**

Notes

① Fuses are not included.

② Complete catalog number according to Catalog Number Selection Guide—**Page V2-T3-128**.

③ Class J Fuse provisions are applicable only to 600V units. When required, use price and dimensions of 600V units for all voltages 600 and below.

Pow-R-Stock Plus

Product Description

Offering two options to meet the demanding schedule requirements of today's customers.

Type PRL1a Panelboard

- Factory-assembled panelboards available from your local satellite plant in 24 to 72 hours
- Unassembled panelboards in stock at authorized Pow-R-Stock Plus distributors

The Product Offering

Pow-R-Stock Plus panels, available either as factory-assembled or as unassembled from distributor stock, are based on the most frequently ordered panelboards, including:

- 120/240V, 208Y/120V and 480Y/277V ratings
- 100–400A mains
- Single- and three-phase
- Surface and flush mounted
- Aluminum or copper bus
- Type 1 or Type 3R enclosures
- Service entrance available
- Options for 200% neutrals and isolated ground bars
- Full menu of branch breakers available

Factory-Assembled Panelboard Option

The Pow-R-Stock Plus factory-assembled panelboard option offers key advantages over programs that offer only unassembled panelboards.

Reduced Installation Time

Unassembled panelboards must be assembled at the job site before the true installation process can begin, adding time and labor cost to the process. Pow-R-Stock Plus assembled panelboards are ready to install the moment they arrive at the job site.

Reduced On-Site Material Handling

A typical 42-circuit unassembled panelboard has a minimum of 46 parts to receive and handle, taking up valuable time at the job site. A Pow-R-Stock Plus assembled panelboard is just one item to receive and handle (two if the box is shipped ahead).

Factory Warranty

Field assembly of unassembled panelboards adds to contractor warranty responsibility. Pow-R-Stock Plus assembled panelboards carry a full factory warranty.

Simplicity

Order your Pow-R-Stock Plus Panelboard by description and it will arrive at the job site complete. No need to worry about matching catalog number kits at the job site or chasing after miscellaneous parts and pieces.

Contact your local satellite plant (see next page for a listing) for more information on the Pow-R-Stock Plus factory-assembled panelboard option.

Pow-R-Stock Plus Program Includes the EZ Trim and EZ Box

Unassembled Panelboard Option

Pow-R-Line 1a and 2a Panelboards are Designed to Provide Application Flexibility with Off-the-Shelf Service

The Pow-R-Stock Plus unassembled panelboard interior is designed specifically for distributor stock and field assembly. Its modular design allows for easy configuration in the field.

Top or bottom incoming, main lugs or main breaker...all with the same Pow-R-Stock Plus unassembled interior. Lug and breaker kits provide greater flexibility with fewer boxes, interiors and trims to stock.

Color-Coded Package Labels

The box, interior and trim packaging are clearly identified with brightly colored labels (a different color for each box size). This facilitates stocking, filling orders, and matching components in the field.

Contact your local Eaton distributor for more details on the Pow-R-Stock Plus unassembled panelboard option.

Eaton Distributors

Contact your Eaton sales office or local satellite manager and arrange to review the program details and criteria for qualification as a Pow-R-Stock Plus distributor.

Manufacturing Plant Locations

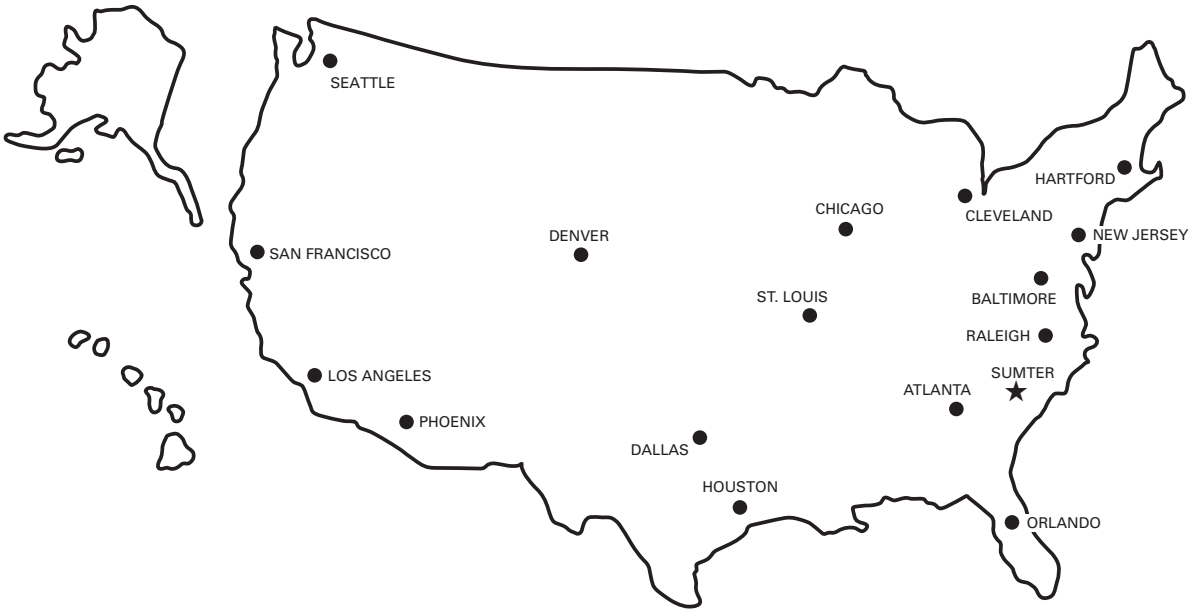

Main Plant

Sumter
845 Corporate Circle
P.O. Box 2258
Sumter, SC 29151
(803) 481-3131

Satellite Plants

Atlanta
7000 Highlands Parkway SE
Suite 103
Smyrna, GA 30082
Fax (770) 433-1863
Phone (678) 309-4260

Baltimore
7451 Coca Cola Drive
Suite C
Hanover, MD 21076
Fax (410) 796-7755
Phone (410) 796-7777

Chicago
220 Windy Point Drive
Glendale Heights, IL 60139
Fax (630) 690-7453
Phone (630) 260-6303

Cleveland
12875 Corporate Drive
Suite E
Parma, OH 44130
Fax (216) 433-0545
Phone (216) 433-0616

Dallas
631 Westport Parkway
Suite 100
Grapevine, TX 76051
Fax (817) 251-6249
Phone (817) 251-6797

Denver
2450 Airport Road
Suite C
Aurora, CO 80011
Fax (303) 366-9993
Phone (303) 366-2080

Hartford
40A International Drive
Windsor, CT 06095
Fax (860) 298-1305
Phone (860) 298-1306

Houston
14825 Northwest Freeway
#100-C
Houston, TX 77040
Fax (713) 744-7531
Phone (713) 744-7530

Los Angeles
11120 Philadelphia Street
Suite A
Mira Loma, CA 91752
Fax (951) 685-3775
Phone (951) 685-5788

New Jersey
96 Stemmers Lane
Westampton, NJ 08060
Fax (609) 835-4777
Phone (609) 835-4230

Orlando
9436 Southridge Park Court
Suite 100
Orlando, FL 32819
Fax (407) 264-9310
Phone (407) 264-9300

Phoenix
560 N. 54th Street
Chandler, AZ 85226
Fax (480) 449-4223
Phone (480) 449-4222

Raleigh
9400 Globe Center Drive
Suite 121
Morrisville, NC 27560
Fax (919) 572-9751
Phone (919) 544-7074

St. Louis
56 Soccer Park Road
Fenton, MO 63026
Fax (636) 717-3505
Phone (636) 717-3500

San Francisco
20923 Cabot Boulevard
Hayward, CA 94545
Fax (510) 784-8980
Phone (510) 784-8981

Seattle
1604 15th Street SW
Suite 114
Auburn, WA 98001
Fax (253) 833-5058
Phone (253) 833-5021

Customer Manufacturing Solution Centers

A unique concept of facilities close to customer locations, assuring fast delivery of standard- and custom-assembled equipment *when it's needed*.

Located at strategic locations throughout the United States, these facilities manufacture and deliver standard or custom-assembled panelboards, switchboards and enclosed circuit breakers…when and where you need them. And, when you have an emergency, they can have your equipment ready in hours.

Highly trained and experienced personnel will manage your order and ensure that you receive on-time delivery of high quality equipment that meets your specifications.

Special Configurations

The unique capabilities of these plants and people can provide solutions for special products to meet special needs.

Typical examples include special dimensions, retrofit equipment and panelboard interiors to fit existing boxes.

Speedy Delivery

- Panelboards: from one to five days.
- Switchboards: between five and 10 days.
- Assembled Enclosed Circuit Breakers: from one to 10 days.

Save Time and Money

No matter your location, you will save time and money when ordering from a CMSC location. For more information, contact your Eaton representative or authorized distributor.

Pow-R-Line Group-Mounted Distribution Switchboard with Integrated Facilities Switchboard (IFS)

4.1 Group-Mounted Switchboards

Pow-R-Line® Distribution Switchboards

- Product Description V2-T4-2
- Application Description V2-T4-2
- Features, Benefits and Functions V2-T4-2
- Standards and Certifications V2-T4-2
- Product Selection V2-T4-2

Commercial Metering Switchboards

- Product Description V2-T4-3
- Application Description V2-T4-3
- Features, Benefits and Functions V2-T4-4
- Standards and Certifications V2-T4-5
- Product Selection V2-T4-5
- Technical Data and Specifications V2-T4-5

4.2 Integrated Facility Switchboards™

- Product Description V2-T4-6
- Application Description V2-T4-6
- Features, Benefits and Functions V2-T4-7
- Standards and Certifications V2-T4-7
- Product Selection V2-T4-7

4.3 Pow-R-Line Drawout Molded Case Circuit Breaker Switchboards

- Product Description V2-T4-8
- Application Description. V2-T4-8
- Features, Benefits and Functions V2-T4-8
- Standards and Certifications V2-T4-8
- Product Selection V2-T4-9
- Dimensions V2-T4-10
- Options, Accessories and Modifications V2-T4-12

4.4 Compartmentalized Switchboards

Pow-R-Line *i* Distribution Switchboards

- Product Description V2-T4-14
- Application Description V2-T4-14
- Features, Benefits and Functions V2-T4-14
- Standards and Certifications V2-T4-15

4.5 Instant Service Switchboards

- Product Description V2-T4-16
- Application Description V2-T4-16
- Features, Benefits and Functions V2-T4-16
- Standards and Certifications V2-T4-16
- Product Selection V2-T4-17
- Accessories V2-T4-19
- Technical Data and Specifications V2-T4-20
- Dimensions V2-T4-20

4.6 Roll-Up Generator Termination Box

- Product Description V2-T4-21
- Features V2-T4-21
- Standards and Certifications V2-T4-21
- Technical Data and Specifications V2-T4-22
- Dimensions V2-T4-35

4.7 Multipoint Meter (MPM)

- Overview V2-T4-36
- Pow-R-Line Multipoint Meter V2-T4-37
- PRC7500—Tenant Metering. V2-T4-38

Learn Online

Pow-R-Line Group-Mounted Distribution Switchboard

Contents

Description	*Page*
Pow-R-Line Distribution Switchboards	
Commercial Metering Switchboards.	**V2-T4-3**

Pow-R-Line Distribution Switchboards

Product Description

Eaton's Pow-R-Line distribution switchboards combine a space-saving design with modular construction and increased system ratings to provide economical and dependable electrical system distribution and protection.

Application Description

Refer to Eaton's *Consulting Application Guide.*

Features, Benefits and Functions

- 6000A maximum main bus rating
- 600 Vac and below
- 600 Vdc and below
- Front or rear accessible
- Type 1 or Type 3R enclosures
- ANSI-61 gray powder coat paint finish
- Microprocessor-based metering and monitoring devices
- Utility metering provisions
- Surge protective devices (SPD)
- Ground fault protection on mains and distribution devices
- Busway and transformer connections
- Complete protective device accessory capability
- 65 kAIC bus bracing standard; optional 100 or 200 kAIC
- Standard tin-plated aluminum bus; optional copper- or silver-plated copper bus
  - Standard bus ampacities based on UL® heat test ratings. Optional density rated bus systems are also available

Main and Individually Mounted Devices

- Magnum® SB insulated case circuit breakers, 800–5000A, fixed or drawout
- Magnum DS power circuit breakers, 800–5000A, fixed or drawout
- Molded case circuit breakers, 400–2500A, fixed mounted
- Bolted pressure switches, 800–5000A
- FDPW fusible switches, 400–1200A

Group-Mounted Distribution Devices

- Molded case circuit breakers, 15–1200A
- FDPW fusible switches, 30–1200A

Standards and Certifications

- Meets NEMA® Standard PB-2 and UL 891
- Seismically qualified

Product Selection

For complete application and pricing information, contact your local Eaton sales office.

Commercial Metering Switchboards

WWCMS

WCMS

Contents

Description	*Page*
Pow-R-Line Distribution Switchboards	V2-T4-2
Commercial Metering Switchboards	
Features, Benefits and Functions	V2-T4-4
Standards and Certifications	V2-T4-5
Product Selection	V2-T4-5
Technical Data and Specifications	V2-T4-5

Commercial Metering Switchboards

Product Description

Eaton's commercial metering switchboards provide electrical system distribution and metering for shopping centers, office buildings and other commercial multimetering applications.

Using standard Pow-R-Line construction and features, these switchboards incorporate metering sections with tenant feeder circuits using meter sockets to meet local utility or customer requirements.

All meter sockets and associated feeder devices are completely factory prewired and shipped ready for the installation of the meters.

Application Description

Type WWCMS

For EUSERC serviced areas. The self-contained meter sockets include a test bypass/disconnect block per EUSERC requirements, and are arranged, typically, for hot sequence metering.

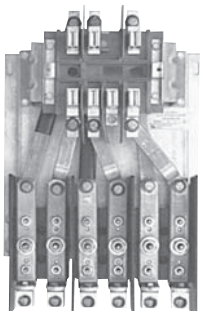

Socket and Test Block Assembly

Type WCMS

For other than EUSERC serviced areas. Self-contained meter sockets are provided with manual lever bypass and can be arranged for either hot or cold sequence metering.

Socket with Manual Lever Bypass

Refer to Eaton's *Consulting Application Guide.*

Features, Benefits and Functions

Pow-R-Line designates a family of distribution switchboards, incorporating design concepts that fit the ever-increasing need for applications on high short-circuit systems, while retaining maximum safety and convenience throughout the line.

Front Accessible

Front-accessible switchboards align at the rear, enabling them to be placed against a wall (Pow-R-Line front accessible). If the main section is deeper than others, due to physical size of the main device, the necessary off-set in line-up will occur in front, and the main section will be accessible from the side as well as from the front. Standard front accessible switchboards will align at the front and rear.

Rear Accessible

Rear-accessible switchboards align at the front and the rear. Bus maintenance and cable entry and exit require rear access. There are two types of rear accessible switchboards. Both types use the same incoming utility and/or main structures. The first type uses group-mounted feeder devices with panel construction (Pow-R-Line rear accessible). The second type uses individually compartmentalized feeder devices with load side insulated bus bar extensions (Pow-R-Line *i*).

Standard Switchboard Height

Standard Pow-R-Line switchboard height is 90 inches (2286.0 mm).

Group Mounting

Group-mounted circuit protective devices are an assembly of units mounted on a panelboard type base (panelboard construction). Units may be molded case breakers, or FDPW fusible switches. Circuit protective devices are accessible from the front.

A main molded case breaker or main FDPW fusible switch, within the sizes listed for panelboard design, can be included in the panel-mounted assembly in lieu of a separate, individually mounted unit.

Space Only for Future Devices Group-Mounted Construction

Where space only for future circuit protective devices is required, the proper space and a blank filler plate will be supplied. Connections and mounting hardware are not included.

Provision for Future Devices

Where provisions for future circuit protective devices are required, space for the device, corresponding vertical bus, device connectors and the necessary mounting hardware will be supplied.

Bus Bar System

Standard bus in the switchboards is tin-plated aluminum. Copper and silver-plated copper are also available.

Main bus and sub-main buses meet UL and NEMA standards for temperature rise on all Pow-R-Line switchboards. Special bus densities are available.

Overcurrent Devices

To properly select and size overcurrent devices for use in a switchboard, the allowable temperature rise must be taken into account as to its effect on the tripping characteristics of the devices in question.

Accordingly, Article 220 of the NEC® requires overcurrent devices to be rated not less than 125% of the continuous load they are protecting. To comply with this, an 80% derating factor must be used with all overcurrent devices such as molded case breakers and FDPW fusible switches unless they are tested and marked as 100% rated devices.

Short-Circuit Rating

Standard bus and connectors on all switchboards are rated for use on systems capable of producing up to 65,000A rms symmetrical short-circuit current at the incoming terminals.

Increased bus short-circuit ratings equal to that of connected switchboard devices, up to 200,000A rms symmetrical, are available in most Pow-R-Line switchboards when approved main devices are installed. Contact Eaton for more information. UL labeled switchboard sections are marked with their applicable short-circuit rating.

Provision for Busway Entrance and Exit

Busway connections to switchboard sections include cutout and drilling in the top of the switchboard with riser connections from the switchboard device or bus, up to the point where the bus duct enters the switchboard. No connections are furnished external to the switchboard.

Note: In all transactions involving busway attached to switchboards, it is essential that information regarding orientation of the busway with respect to the front of the switchboard be supplied to the coordinating assembly plant.

On Pow-R-Line switchboards, solid bus bar is used to connect the bus duct to the individually mounted main device, main or sub-main switchboard bus, or vertical main bus of panel mounted circuit protective device panels. Busway fed by group-mounted branch devices are cable connected.

Aluminum riser connections are standard. Copper- or silver-plated copper is available as a modification.

Transitions

Transition structures are required for connecting switchboards to the secondary of power center transformer (dry or fluid filled), motor control centers, and for other special switchboard configurations such as "L" or "U" shaped lineups. In some application, an extra structure complete with connections is required; in others, where switchboard depth and space permit, only the connection conductors are required. Refer to factory for these applications.

Standards and Certifications

- UL 891
- NEMA PB-2
- Seismically qualified

Product Selection

For complete application and pricing information, contact your local Eaton sales office.

Technical Data and Specifications

Service

- 120/240V, single-phase, three-wire
- 240/120V, 208Y/120V, 415Y/240V, 480Y/277V or 600Y/347V three-phase, four-wire
- 600 Vdc

Main Bus Rating

- 400–4000A

Service Section

- Main circuit breaker, 400–4000A
- Main fusible switch, 400–4000A
- Main lugs only, 400–6000A

Metering Sections

- Tenant main disconnects and meter sockets (200A maximum self-contained metered circuits)
- Hot sequence metering circuits
- Cold sequence metering circuits (WCMS only)
- Optional rear barriered wireways or load side pull sections for cable exit requirements
- Sections for metered circuits larger than 200A available with 400A continuous rated self-contained sockets or with CT compartment and transformer rated socket in combination with disconnect

Integrated Facility Switchboard

Contents

Description	*Page*
Integrated Facility Switchboards	
Features, Benefits and Functions	**V2-T4-7**
Standards and Certifications	**V2-T4-7**
Product Selection	**V2-T4-7**

An Eaton Green Solution

Product Description

Eaton's Integrated Facility Switchboards use the modular Pow-R-Line group-mounted switchboard design to integrate traditionally separate electrical distribution and control equipment into a single space-saving factory assembled and connected package.

The service entrance equipment can be integrated with multiple lighting and appliance branch panelboards into a compact front-accessible group-mounted switchboard. Where multiple panelboards are used in the same electrical room as a conventional distribution switchboard or power panelboards, the integrated design will significantly reduce equipment space requirements, as well as reduce installation time and costs.

Other associated equipment can also be integrated into the assembly, including dry-type distribution transformers, time clock space, lighting control, electronic controls, surge protective devices, metering and energy monitoring devices. Depending upon the application, other user-defined equipment such as a subsystem control package may also be incorporated.

Application Description

Eaton's Integrated Facility Switchboards are designed to meet specific needs for:

- Retail chain stores
- Commercial offices
- High rise buildings
- Correctional facilities
- Agricultural facilities
- Industrial facilities
- Hospitals/healthcare facilities
- Educational facilities

Whether the application is a multi-site prototype or single application, integrated switchboards offer time and space-saving features.

For complete application description, refer to Eaton's *Consulting Application Guide*.

Features, Benefits and Functions

Front Accessible

Integrated Facility Switchboards are front accessible and align at the rear, enabling them to be placed against a wall. Most switchboards align at the front and the rear. If the main section is deeper than others, due to physical size of the main device, the necessary off-set in line-up will occur in front, and the main section will be accessible from the side as well as from the front.

Standard Switchboard Height

Switchboard height is 90 inches (2286.0 mm).

A limited offering of 78-inch (1981.2 mm) high equipment is available. Consult the factory for specific applications.

Switchboard Shipping Splits

The sections can be shipped as specified by the customer to meet specific requirements.

For retrofit applications, single-piece switchboard structures can be shipped to facilitate movement through limited access doorways, etc.

Factory Interconnections

Most sub-panels are fed from the main distribution panel feeder circuit breakers using copper cable sized per the NEC and UL.

Space Savings

The space-saving switchboard installation provides additional usable floor space. For example:

- Retail stores—floor space for sales
- Offices—additional storage, cubicle
- Healthcare—additional work area
- Retrofits—ability to fit existing rooms

Traditionally Mounted Equipment

Site Construction Savings

Timely installation of the electrical system typically is a key element on the critical path for any project.

Along with the time to install the equipment, other expenses include the time to handle all of the loose pieces of equipment arriving on a job site and ensuring it reaches the proper trades person. With Eaton's Integrated Facility Switchboards, one piece of equipment is typically shipped to a job site virtually eliminating these issues.

The equipment may also be used for temporary power on job sites, further reducing construction expenses and times.

Construction Savings

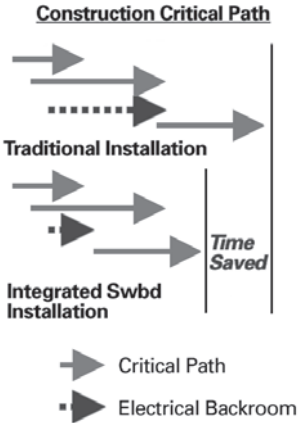

Standards and Certifications

- Meets NEMA Standard PB-2 and UL 891
- Panelboards mounted inside the sections meet NEMA PB-1 and UL 67
- Other equipment is UL listed as applicable and appropriate

Listed

Product Selection

For complete application and pricing information, contact your local Eaton sales office.

Pow-R-Line Drawout Molded Case Circuit Breaker Switchboards

Contents

Description ***Page***

Pow-R-Line Drawout Molded Case Circuit Breaker Switchboards

Product Selection **V2-T4-9**

Dimensions **V2-T4-10**

Options, Accessories and Modifications **V2-T4-12**

Product Description

- Drawout molded case circuit breaker switchboard
- Front accessible
- Front connected
- Through-the-door design drawout mechanism through 600A
- Insulated case UL 489 breakers up to 1200A
- Visual indication of breaker status and position
- Large grab handles for easy removal
- 600 Vac maximum
- 600A maximum, group-mounted, drawout molded case feeder breakers
- Individually mounted insulated UL 489 breakers through 1200A

Application Description

- Drawout feeders in UL 891 distribution switchboards
- Rated as Service Entrance Equipment when appropriately equipped
- Ideal for:
  - Data centers
  - Industrial facilities
  - Process equipment manufacturing
  - Anywhere that requires quick change of feeder devices is needed

Features, Benefits and Functions

Eaton's Pow-R-Line Drawout switchboard design is listed and labeled to the UL 891 standard. Switchboards may be rated up to 4000A. Main breakers are available up to 4000A in both fixed-mounted and drawout configurations. Main breakers may be Magnum DS® power circuit breakers or Magnum SB insulated case circuit breakers in either drawout or fixed-mounted configurations. Both are front-accessible configurations. Fixed-mounted molded case circuit breaker mains are available up through 2500A.

Utility and customer-owned metering is available. Customer metering includes Web-enabled communicating systems.

Aluminum bus is standard with copper and silver-plated copper optional. Other common options include surge protective devices (SPDs), seismically qualified designs, density rated bus and many more.

Drawout feeder MCCBs are available in two-pole and three-pole offerings from 20A to 600A in the high-density, group-mounted design.

Drawout feeders above 600A through 1200A integrate the molded case NX drawout breaker. Drawout breakers above 1200A through 2000A use the Magnum SB insulated case circuit breaker. All are front accessible and front connected.

Standards and Certifications

- UL 891 listed

Instructions

On an interim basis until Bid Manager™ is updated, please use the Pow-R-Line C® switchboard Bid Manager take-off as the basis for the following:

- Utility compartments
- Service entrance or non-service entrance information
- Voltage
- Bus rating
- Bus material
- Nameplate
- Ground bus material
- Short-circuit current rating
- Top or bottom entrance
- Incoming cable location
- Customer metering
- Surge protective device
- Bus bracing

Product Selection

Select drawout molded case circuit breaker and UL 489 listed insulated case circuit breakers from the following pages.

- Always select front access/rear aligned
- IFS sections are permissible but will be bolt-on devices only
- Use the existing Pow-R-Line C switchboard take-off to select main devices

Drawout Branch/Feeder Breakers

Single Branch/Feeder

Dual Branch/Feeder

Single-Mount Two-Pole and Three-Pole

Ampere Rating	Interrupting Rating (kA Symmetrical) 240 Vac	480 Vac	600 Vac	Breaker Type	"X" Space
Single-Mount Breakers with Thermal-Magnetic Trip Units					
70–250	85	35	18	JGS	7X
70–250	100	65	25	JGH	7X
70–250	200	100	35	JGC	7X
250–600	85	35	18	LGS	9X
250–600	100	65	35	LGH	9X
250–600	200	100	50	LGC	9X
Single-Mount Breakers with Electronic 310+ Trip Units (Three-Pole Only)					
20–50	85	35	18	JGS	7X
20–50	100	65	25	JGH	7X
20–50	200	100	35	JGC	7X
40–100	85	35	18	JGS	7X
40–100	100	65	25	JGH	7X
40–100	200	100	35	JGC	7X
80–150	85	35	18	JGS	7X
80–150	100	65	25	JGH	7X
80–150	200	100	35	JGC	7X
100–250	85	35	18	JGS	7X
100–250	100	65	25	JGH	7X
100–250	200	100	35	JGC	7X
100–250	85	35	18	LGS	9X
100–250	100	65	35	LGH	9X
100–250	200	100	50	LGC	9X
200–400	85	35	18	LGS	9X
200–400	100	65	35	LGH	9X
200–400	200	100	50	LGC	9X
250–600	85	35	18	LGS	9X
250–600	100	65	35	LGH	9X
250–600	200	100	50	LGC	9X
Provision for Future (Includes Factory-Installed Base Cassette)					
20–250	Any JG family branch/feeder breaker				7X
100–600	Any LG family branch/feeder breaker				9X
Individually Mounted NX Breakers					
800	85	65	42	NX	½ Structure
1000	85	65	42	NX	½ Structure
1200	85	65	42	NX	½ Structure

Dimensions

Approximate Dimensions in Inches (mm)

Select the appropriate distribution section(s) for drawout MCCB feeder devices from the sections shown below.

All breakers are front accessible and front connected.

Drawout Molded Case Circuit Breaker Feeder Devices

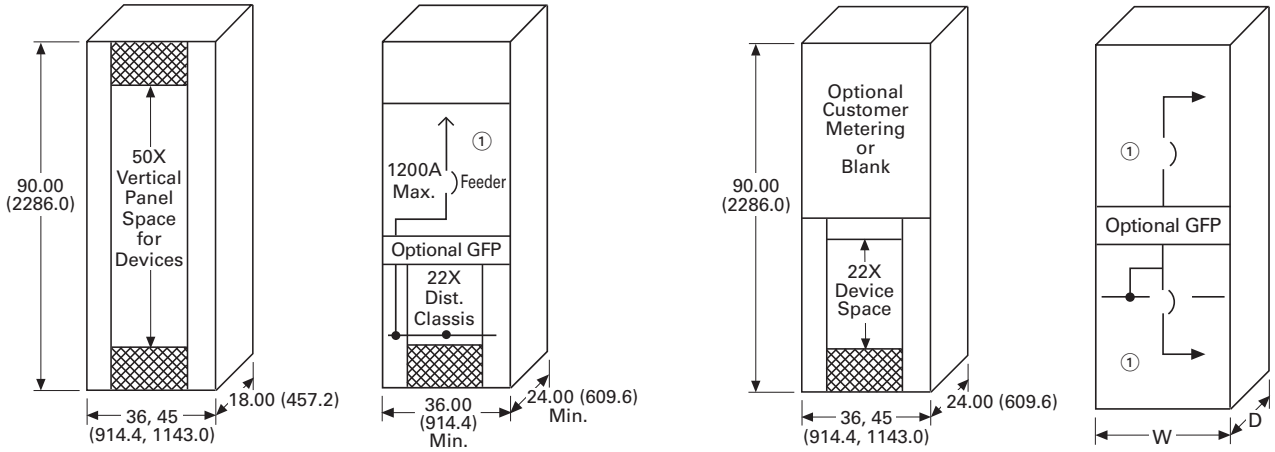

Full Distribution Section

Top-Mounted Feeder with Distribution Chassis

Maximum 2000A CT Compartment Combination Section

Notes

All four sections widths 36-inch minimum.

See distribution layout Guides **Page V2-T4-11** for actual minimum structure width and for feeder device "X" requirements.

① Drawout NX Insulated Case UL 489 breaker. 1200A maximum. Select breaker from **Page V2-T4-9**.

Layout for Group-Mounted Drawout Molded Case Circuit Breaker Feeder Devices

Instructions

Determine the structure width by the group-mounted drawout MCCB feeder devices below.
The width of the structure is determined by the maximum structure size shown for each device.

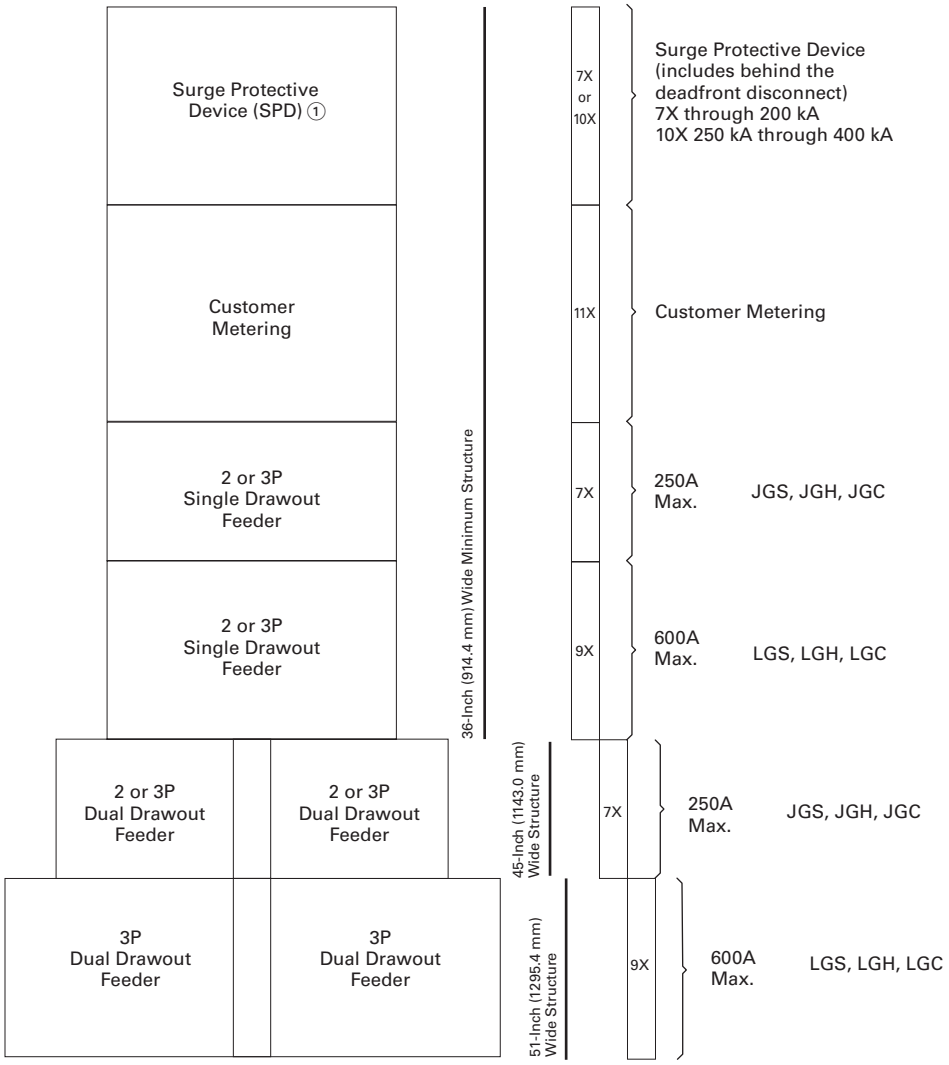

Note

① Preferred location of SPD is mounted at the top of the first distribution section.

Options, Accessories and Modifications

1. Ambient Compensating Breakers

For ambient compensating breakers (where available) in lieu of standard breakers, add 10% to panelboard branch breaker and to main breaker list prices, when required. Panels with this option can not be UL listed.

2. JG and LG Breaker Accessories—Internal (Only One Accessory Per Position)

Accessories

Breaker Type	Device Mounting	Internal Breaker Accessory
JG family	Drawout ①	Auxiliary switch 1A-1B
JG family	Drawout ①	Auxiliary switch 2A-2B
JG family	Drawout ①	Bell alarm
JG family	Drawout ①	High load alarm w/trip
JG family	Drawout ①	Ground fault alarm w/trip
JG family	Drawout ②	Undervoltage release
JG family	Drawout ②	Zone selective interlock
LG family	Drawout ①	Auxiliary switch 1A-1B
LG family	Drawout ①	Auxiliary switch 2A-2B
LG family	Drawout ①	Bell alarm
LG family	Drawout ①	High load alarm w/trip
LG family	Drawout ①	Ground fault alarm w/trip
LG family	Drawout ②	Undervoltage release ③
LG family	Drawout ②	Zone selective interlock

Notes

① Accessories wired to a pull-apart terminal block. Right position only.
② Accessories wired to a pull-apart terminal block. Left position only.
③ Not available when breaker is equipped with ARMS trip unit.

3. Drawout NX Internal

Modification 3

Internal NX Breaker Accessories
Shunt trip (specify voltage)
Undervoltage release
Auxiliary switch
Motor operator
Trip indicator
Bell alarm
Shutters

4. Compression Main Lugs

Al/Cu Burndy Range Taking Type.

Modification 4

Main Lug Amperes	PRL4D Lug Wire Range
800	(3) 500–750 kcmil
1200	(4) #2–600 kcmil (4) 500–750 kcmil

5. Copper Lugs/Terminals

Optional copper mechanical main lugs only and includes main incoming neutral lug.

Modification 5

Main Lug Amperes	PRL4D Lug Wire Range
600	(2) 1/0–600 kcmil
800	(2) 1/0–600 kcmil
1200	(3) 1/0–600 kcmil

6. Copper Main Busbars

Optional copper busbars are available in all ampere ratings.

Modification 6

Ampere Range	Bare Copper Chassis Bus	Silver-Plated Copper Bus
800		
1200		
1600		
2000		
2500		
3000		
4000		

7. Density Rated Bus

Standard main bus ampere rating is determined by UL listed temperature rise testing. Density rated bus is defined at 750A per square inch for aluminum bus and 1000A per square inch for copper bus. Adder for aluminum density rated bus is in addition to the base price. Adder for copper density rated bus is in addition to the base price plus the appropriate adder for copper bus. See Modification 7.

Modification 7

Ampere Rating
Aluminum—750A per Square Inch
800
1200
1600
2000
2500
3000
4000
Copper—1000A per Square Inch
800
1200
1600
2000
2500
3000
4000

8. Electronic Trip Units

Thermal-magnetic trip units are standard. For electronic trip units, select appropriate breaker from the electronic trip section of **Pages V2-T4-9** and **V2-T4-11**. See selection below for electronic trip units.

Modification 8

Breaker Frame Family	Trip Unit Type
Drawout Feeder JGS, JGH, JGC	Digitrip 310+ LS
	Digitrip 310+ LSI
	Digitrip 310+ LSG
	Digitrip 310+ LSIG
LGS, LGH, LGC	Digitrip 310+ LS
	Digitrip 310+ LSI
	Digitrip 310+ LSG
	Digitrip 310+ LSIG
	Digitrip 310+ LS with ARMS
	Digitrip 310+ LSI with ARMS
	Digitrip 310+ LSG with ARMS
	Digitrip 310+ LSIG with ARMS
Drawout NX	520 LI
	520 LSI
	520 LSI with ZSI
	520 LSIG
	520 LSIG with ZSI
	520M LSI
	520M LSI with ZSI
	520M LSIA
	520M LSIA with ZSI
	520M LSIG
	520M LSIG with ZSI
	520M LSI with ARMS
	520M LSI with ZSI and ARMS
	520M LSIA with ARMS
	520M LSIA with ZSI and ARMS
	520M LSIG with ARMS
	520M LSIG with ZSI and ARMS

Notes

L = Adjustable long time pickup
S = Adjustable short time pickup w/ fixed short time delay
I = Adjustable instantaneous pickup
G = Adjustable ground fault pickup
A = Adjustable ground fault alarm only (no trip)
ARMS = Arcflash Reduction Maintenance System
ZSI = Zone selective interlocking

9. Ground Bus

Copper or silver-plated copper ground bus in lieu of standard aluminum.

Modification 9

Bus Material	Size in Inches (mm)
Copper	0.25 (6.4) x 1.50 (38.1)
	0.25 (6.4) x 2.00 (50.8)
Silver-plated copper	0.25 (6.4) x 1.50 (38.1)
	0.25 (6.4) x 2.00 (50.8)

10. Ground Fault Protection

Refer to Modification 8 for ground fault trip units.

11. Infrared (IR) Viewing Windows

Infrared viewing windows for main devices and drawout single-mounted feeder devices.

Modification 11

Overcurrent Device	IR Window Manufacturer
All fixed mount mains	Iriss Hawk (Fluke)
Single drawout feeder breakers ①	Iriss Hawk (Fluke)

12. Nameplates, Engraved

Field-attached nameplates.

Modification 12

Description
Mastic back, engraved, black with white lettering
Mastic back, engraved, colors other than black
Nameplates, screw attached

13. Seismically Qualified

For seismically qualified PRL drawout switchboard, request seismic labeling on order.

14. Service Entrance Equipment

Service Entrance labeling as detailed under the "Service Entrance Equipment" per UL and NEC. Only switchboards meeting these requirements may be labeled as such. The requirement or service entrance labeling must be noted on the order. Includes neutral disconnect link and labeling "Suitable Only For Use as Service Equipment" (SUSE).

15. Surge Protective Devices (SPD)

Package includes SPD unit and integral circuit breaker disconnect (30A) connected to the chassis bus.

Modification 15

Surge Current Rating	50	80	100	120	160	200	250	300	400
SPD Package Options—Basic Package									
LED monitor, L-N, L-G, L-L and N-G	■	■	■	■	■	■	■	■	■
Standard Package									
LED monitor, L-N, L-G, L-L and N-G. EMI/RFI filtering. Audible alarm with disable switch. Form C relay contact.	■	■	■	■	■	■	■	■	■
Premium Package									
LED monitor, L-N, L-G, L-L and N-G. EMI/RFI filtering. Audible alarm with disable switch. Form C relay contact. Six-digit LCD display. Counts surges in all modes. Nonvolatile memory (no battery backup). Reset button designed to prevent accidental resets.	■	■	■	■	■	■	■	■	■

16. Touchup Paint

Modification 16

Description
12 oz spray can. ANSI-61 light gray indoor
Case lot of 12—12 oz spray can. ANSI-61 light gray indoor

Note

① Available on only single-mounted drawout. Not available on dual-mounted feeder devices.

Compartmentalized Feeder Sections

Front View—Circuit Breakers

Front View—Fusible Units

Contents

Description ***Page***

Compartmentalized Switchboards
Standards and Certifications **V2-T4-15**

Product Description

Eaton's Pow-R-Line *i* switchboards are engineered in a new compartmentalized design for applications where a greater degree of safety is required. A wide variety of configurations is possible, including utility metering, customer metering, main devices, branch devices, accessories and enclosures.

Application Description

Refer to Eaton's *Consulting Application Guide*.

Features, Benefits and Functions

Significant safety features include:

- Individual compartments for branch devices—glass polyester for circuit breakers and steel for fusible switches. These compartments help eliminate possible contact with the main bus and reduce fault propagation
- Three-section construction with each section barriered from the other
  - Device section—each device is mounted in its own compartment
  - Bus bar section—contains both horizontal and vertical buses
  - Rear cable compartment—completely isolated from the bus bars
- Insulated copper runback. Power is taken from the protective device by the insulated copper runback through a standard full height glass polyester barrier to the rear cable compartment. This design virtually eliminates the possibility of accidental contact with the main buses during installation or maintenance

Main devices are available from 400–4000A and can include molded case circuit breakers, Magnum SB, Magnum DS circuit breakers, FDPW fusible switches or bolted pressure switches. Main buses are rated up to 6000A.

Branch circuit breakers range from 15–1200A frames. When circuit breakers are used, higher ratings and increased series ratings will be achieved. Branch fusible switches are available from 100–1200A.

Interrupting ratings up to 200,000A are UL listed and the bus bar system may be braced from a standard 65,000A up to a maximum 200,000A.

Integrated Monitoring Protection and Control Communications Systems

The capabilities of distribution and control assemblies can be expanded by tying together multiple devices in electrical distribution systems. From a central location (on-site or off-site), an operator uses a personal computer (master control unit) to monitor, control and communicate with compatible devices on a distribution system. These microprocessor-based devices, designed and built by Eaton, perform monitoring, protection and control functions.

Ground Fault Test Panels

Pow-R-Line *i* switchboards can accommodate either integral or zero sequence types of ground fault protection. Depending on the specific application, a test panel can be mounted in the circuit breaker compartment, which may eliminate the need for an auxiliary structure.

Fusible Switches

Pow-R-Line *i* switchboards have been designed to accommodate fusible switches. Safety is provided by steel compartments that insulate each horizontally mounted switch from the vertical and main buses. As with switchboards using circuit breakers, insulated copper runbacks carry power into the spacious, glass polyester barriered rear cable compartment.

UL Listed Shunt Trip and Fusible Switches

Shunt trip attachments for use with ground fault protection devices can be installed on 400–1200A Type FDPW fusible switches. Both are UL listed when the shunt trip is factory installed.

High Durability Finish

A baked-on polyester powder coating system protects all structural steel parts. It provides excellent mechanical strength and resistance to chalking normally caused by the sun's ultraviolet rays and meets the salt spray requirements of ASTM B-117.

Pow-R-Line *i* Quality Assurance

Final testing helps ensure that each Pow-R-Line *i* switchboard performs in accordance with UL standards and customer specifications. Each assembly is shipped with a "Switchboard Verification Report" that documents completion of every inspection and test.

Provisions for the Future

Future expansion provisions include line side connectors, load side runbacks, terminals, and glass polyester compartments and covers (for circuit breakers). Space only for "both circuit breakers and fusible switches is also available.

Standards and Certifications

Pow-R-Line *i* switchboards are UL 891 listed and meet all applicable requirements of NEMA and NEC. They are rear accessible and front and rear aligned. Both indoor and outdoor enclosures are available.

- Meets NEMA Standard PB-2 and UL 891
- Seismically qualified

Instant Service Switchboards

Type 1 Indoor

Type 3R Outdoor

Contents

Description	*Page*
Instant Service Switchboards	
Product Selection	**V2-T4-17**
Accessories	**V2-T4-19**
Technical Data and Specifications	**V2-T4-20**
Dimensions	**V2-T4-20**

Product Description

Eaton's Instant® Service Switchboards are designed as stocked units to provide fast delivery to match the needs of the construction market.

Suitable for use as service entrance equipment, they combine utility metering provisions with a fused main switch in a single compact section that can also include a distribution panel for feeder and branch circuit breakers.

Application Description

Typical applications for these versatile switchboards include small office buildings and factories, stores, supermarkets and shopping centers.

Features, Benefits and Functions

These switchboards are available in either indoor or outdoor enclosures manufactured of code-gauge steel with a durable light gray finish. All units are completely enclosed with front, rear and side covers. Outdoor units include a front hinged door.

The service section includes:

- Main lugs mounted at the top (two #4–600 kcmil per phase) for overhead feed or for use with an underground pull section
- A sealable metering and CT compartment with bussing for utility bar type CTs and two 15-inch (381.0 mm) high meter compartment doors—one with provisions for meter socket and test block, one blank (meter socket is ordered separately)
- A 400 or 600A T-Type fused main switch or 400, 600 or 800A main circuit breaker with either load lugs (same as main lugs) or with connections to a factory installed distribution panel

Underground pull sections are available with lug landing kits providing studs for incoming cables per EUSERC standards and two #4–600 kcmil lugs per phase for cable connection to the service section.

Distribution panels can be included for 240 Vac maximum (single-phase three-wire or three-phase four-wire), 480Y/277 Vac (three-phase four-wire) or 480 Vac (three-phase three-wire). The 240V panels have provisions for four Type ED 225A frame circuit breakers and 24 poles of Type BAB 100A frame circuit breakers. The 480Y/277V panel has provisions for four Type FD 225A frame circuit breakers and 24 poles of Type GHB 100A frame circuit breakers. The bolt-on type circuit breakers are ordered separately.

For applications that require the load circuit conductors to exit at the top, a loadside wireway compartment is available that bolts to the service section.

Standard switchboards include two 15.00-inch (381.0 mm) high meter compartment doors, one with meter socket provisions and one blank. For other arrangements, accessory units are available. Check utility requirements.

Standards and Certifications

Eaton's Instant Service Switchboards are listed by Underwriters Laboratories and comply with all applicable industry standards.

These switchboards meet EUSERC standards as well as other local utility codes.

Seismic Qualified

Eaton's Instant Service Switchboards are seismically tested, seismically qualified and meet or exceed requirements of the Uniform Building Code® (UBC), the California Building Code (CBC) and the International Building Code (IBC) for all seismic zones.

UL Listed

Product Selection

Main Fused Switch Only

Service	Main Ampere Rating	Type 1—Indoor Catalog Number	Type 3R—Outdoor Catalog Number
240 Vac Maximum			
Single-phase three-wire	400	**MSB423**	**RMSB423**
	600	**MSB623**	**RMSB623**
Three-phase four-wire	400	**MSB424**	**RMSB424**
	600	**MSB624**	**RMSB624**
480Y/277 Vac			
Three-phase four-wire	400	**MSB444**	**RMSB444**
	600	**MSB644**	**RMSB644**

Main Fused Switch with Distribution Panel

Service	Main Ampere Rating	Type 1—Indoor Catalog Number	Type 3R—Outdoor Catalog Number
240 Vac Maximum ①			
Single-phase three-wire	400	**MSBP423**	**RMSBP423**
	600	**MSBP623**	**RMSBP623**
Three-phase four-wire	400	**MSBP424**	**RMSBP424**
	600	**MSBP624**	**RMSBP624**
480Y/277 Vac ②			
Three-phase four-wire	400	**MSBP444**	**RMSBP444**
	600	**MSBP644**	**RMSBP644**

Main Breaker Switch Only

Service	Main Ampere Rating	Type 1—Indoor Catalog Number	Type 3R—Outdoor Catalog Number
240 Vac Maximum ①			
Single-phase three-wire	400	**MBB423**	**RMBB423**
	600	**MBB623**	**RMBB623**
	800	**MBB823**	**RMBB823**
Three-phase four-wire	400	**MBB424**	**RMBB424**
	600	**MBB624**	**RMBB624**
	800	**MBB824**	**RMBB824**
480Y/277 Vac ②			
Three-phase four-wire	400	**MBB444**	**RMBB444**
	600	**MBB644**	**RMBB644**
	800	**MBB844**	**RMBB844**

Notes

① 240V distribution panels have double branch provisions for four Type ED 225A frame circuit breakers and 24 poles of Type BAB 100A frame circuit breakers.

② 480Y/277V distribution panels have double branch provisions for four Type FD 225A frame circuit breakers and 24 poles of Type GHB 100A frame circuit breakers.

Circuit breakers for distribution panels are ordered separately.

Main Breaker Only with Distribution Panel

Service	Main Ampere Rating	Type 1—Indoor Catalog Number	Type 3R—Outdoor Catalog Number
240 Vac Maximum			
Single-phase three-wire	400	**MBBP423** ①	**RMBBP423** ①
	600	**MBBP623** ①	**RMBBP623** ①
	800	**MBBP823** ②	**RMBBP823** ②
	800	**MBBP823-P** ③	**RMBBP823-P** ③
	800	**MBBP823-K** ④	**RMBBP823-K** ④
Three-phase four-wire	400	**MBBP424** ①	**RMBBP424** ①
	600	**MBBP624** ①	**RMBBP624** ①
	800	**MBBP824** ②	**RMBBP824** ②
	800	**MBBP824-P** ③	**RMBBP824-P** ③
	800	**MBBP824-K** ④	**RMBBP824-K** ④
480Y/277 Vac			
Three-phase four-wire	400	**MBBP444** ⑤	**RMBBP444** ⑤
	600	**MBBP644** ⑤	**RMBBP644** ⑤
	800	**MBBP844** ②	**RMBBP844** ②
	800	**MBBP844-K** ④	**RMBBP844-K** ④

Underground Pull Sections—Same Depth as Switchboard with Provisions for Lug Landing Kit

Section Width Inches (mm)	Type 1—Indoor Catalog Number	Type 3R—Outdoor Catalog Number
24.00 (609.6) ⑥	**UG24W**	**RUG24W**
30.00 (762.0)	**UG30W**	**RUG30W**

NEMA Type 1 pull section can be installed separate from service section. Add side closer plate, catalog number UGCP.

Lug Landing Kits for Underground Pull Sections

Maximum Ampere Rating	Service	Catalog Number
400	Single-phase three-wire	**LL4003**
	Three-phase four-wire	**LL4004**
800	Single-phase three-wire	**LL8003** ⑦
	Three-phase four-wire	**LL8004** ⑦

Load Side Wireway—12 Inches (304.8 mm) Wide Same Depth as Switchboard

Type	Catalog Number
Type 1—Indoor	**LSS12W**
Type 3R—Outdoor	**RLSS12W**

Notes

① 240V distribution panels have double branch provisions for four Type ED 225A frame circuit breakers and 24 poles of Type BAB 100A frame circuit breakers.

② 800A distribution panels have double branch provision for six Type FD 225A frame circuit breakers only.

③ Suffix-P: four Type FD 225A frame circuit breakers and 24 poles of Type GHB 100A frame circuit breakers.

④ Suffix-K: one Type KD OR HKD 400A frame circuit breakers and four Type FD 225A frame circuit breakers.

⑤ 480Y/277V distribution panels have double branch provisions for four Type FD 225A frame circuit breakers and 24 poles of Type GHB 100A frame circuit breakers.

⑥ Check utility requirements—most EUSERC utilities require 30-inch (762.0 mm) width.

⑦ Mounts in 30-inch (762.0 mm) wide section only.

Circuit breakers for distribution panels are ordered separately.

Accessories

Meter Compartment Doors—(Meter Sockets Not Included)

Height	Width	Drilling	Catalog Number
15.00 (381.0)	32.00 (812.8)	Blank	**MD150**
		One socket	**MD151**
30.00 (762.0)	32.00 (812.8)	Blank	**MD300**
		Two sockets	**MD302**

Meter Sockets—For Field Installation

Number of Jaws	Catalog Number	Number of Jaws	Catalog Number
4	**M4**	8	**M8**
5 ①	**M5**	13	**M13**
6 ②	**M6**	15 ③	**M15**

Circuit Breakers for Distribution Panels 240 Vac Three-Phase Four-Wire Maximum

Ampere Rating	Single-Pole 120/240 Vac Catalog Number	Two-Pole 120/240 Vac Catalog Number	Two-Pole 240 Vac Catalog Number	Three-Pole 240 Vac Catalog Number
15	**BAB1015I**	**BAB2015I**	**BAB2015HI**	**BAB3015HI**
20	**BAB1020I**	**BAB2020I**	**BAB2020HI**	**BAB3030HI**
30	**BAB1030I**	**BAB2030I**	**BAB2030HI**	**BAB3030HI**
40	**BAB1040I**	**BAB2040I**	**BAB2040HI**	**BAB3040HI**
50	**BAB1050I**	**BAB2050I**	**BAB2050HI**	**BAB3050HI**
60	**BAB1060I**	**BAB2060I**	**BAB2060HI**	**BAB3060HI**
70	—	**BAB2070I**	**BAB2070HI**	**BAB3070HI**
90	—	**BAB2090I**	**BAB2090HI**	**BAB3090HI**
100	—	**BAB2100I**	**BAB2100HI**	**BAB3100HI**
100	—	—	**ED2100I**	**ED3100I**
125	—	—	**ED2125I**	**ED3135I**
150	—	—	**ED2150I**	**ED3150I**
175	—	—	**ED2175I**	**ED3175I**
200	—	—	**ED2200I**	**ED3200I**
225	—	—	**ED2225I**	**ED2225I**
300	—	—	**KD2300I**	**KD3300I**
350	—	—	**KD2350I**	**KD3350I**
400	—	—	**KD2400I**	**KD3400I**

Circuit Breakers for Distribution Panels 480Y/277 Vac (Three-Phase Four-Wire)

Ampere Rating	Single-Pole Catalog Number	Two-Pole Catalog Number	Three-Pole Catalog Number
15	**GHB1015I**	**GHB2015I**	**GHB3015I**
20	**GHB1020I**	**GHB2020I**	**GHB3030I**
30	**GHB1030I**	**GHB2030I**	**GHB3030I**
40	**GHB1040I**	**GHB2040I**	**GHB3040I**
50	**GHB1050I**	**GHB2050I**	**GHB3050I**
60	**GHB1060I**	**GHB2060I**	**GHB3060I**
70	—	**GHB2070I**	**GHB3070I**
90	—	**GHB2090I**	**GHB3090I**
100	—	**GHB2100I**	**GHB3100I**
100	—	**FD2100I**	**FD3100I**
125	—	**FD2125I**	**FD3135I**
150	—	**FD2150I**	**FD3150I**
175	—	**FD2175I**	**FD3175I**
200	—	**FD2200I**	**FD3200I**
225	—	**FD2225I**	**FD2225I**
300	—	**HKD2300I**	**HKD3300I**
350	—	**HKD2350I**	**HKD3350I**
400	—	**HKD2400I**	**HKD3400I**

Special Utility Options—Select for the Following Utilities

Utility Company	Catalog Number
City of Anaheim	**ISTAHEIM**
City of Burbank	**ISTBANK**

Special Bus Options

Maximum Ampere Rating	Catalog Number
Density Bus Kit	
400	**DBK400**
600	**DBK600**
800	**DBK800**
Copper Bus Kit	
400	**CUK400**
600	**CUK600**
800	**CUK800**

Notes

① 240V distribution panels have double branch provisions for four Type ED 225A frame circuit breakers and 24 poles of Type BAB 100A frame circuit breakers.

② 800A distribution panels have double branch provision for six Type FD 225A frame circuit breakers only.

③ Suffix-P: four Type FD 225A frame circuit breakers and 24 poles of Type GHB 100A frame circuit breakers.

Technical Data and Specifications

- 120/240 Vac, single-phase three-wire
- 208Y/120V or 240/120 Vac, three-phase four-wire
- 240 Delta/120 Vac, three-phase four-wire
- 480Y/277 Vac, three-phase four-wire
- 480 Vac, three-phase three-wire

Interrupting Ratings (Series Rating)

- 65,000 rms symmetrical amperes at 240 Vac, using Types BAB and ED branch circuit breakers
- 65,000 rms symmetrical amperes at 480Y/277 Vac, using Types GHB and FD branch circuit breakers

Dimensions

Approximate Dimensions in Inches (mm)

Instant Service Switchboards

Height	Width	Depth
Indoor		
90.00 (2286.0)	32.00 (812.8)	14.00 (355.6)
Outdoor		
90.00 (2286.0)	38.00 (965.2)	26.00 (660.4)

Roll-Up Generator Termination Box

Contents

Description	*Page*
Roll-Up Generator Termination Box	
Technical Data and Specifications	**V2-T4-22**
Dimensions	**V2-T4-35**

Product Description

Eaton's roll-up generator termination boxes (RUGTB) are designed as an intermediate termination cabinet between temporary, portable roll-up generator and the facility being served. The RUGTB is designed for permanent installation and is secured to a concrete pad with bolts.

The RUGTB includes line terminations for the temporary connection of the portable generator and permanent connections on the load side to the secondary disconnect in the facility, which is interlocked with the main overcurrent device in a manner that ensures that only one (either the service main or the generator main) can be energized at any one time. The conductors and conduits must be sized and suitable for carrying the load ratings marked on the equipment per the National Electrical Code.

Features

Enclosure

The enclosure is free-standing with feet on the bottom, providing access to the cable connections for temporary roll-up generator terminations. The enclosure is made from code gauge steel and is suitable for either outdoor or indoor installation (Type 3R construction). The enclosure is powder coat painted ANSI 61 gray. Each enclosure houses line and load phase, neutral and ground connections. Access is provided at the bottom of the enclosure for both the temporary connections to the roll-up generator and permanent connections to the facility's generator overcurrent disconnecting means. The permanent connection section at the bottom of the enclosure contains a fixed mounting plate. The temporary generator connection to the RUGTB contains a hinged cover that allows access to the enclosure for generator conductors.

The enclosure uses feet that raise the termination compartment off finished grade by 18 inches (457.2 mm). Enclosure feet have provisions for anchoring the RUGTB. Anchor bolts secure the RUGTB and shall be encased in a concrete pad by the installer in a manner that is suitable as a permanent base for the unit. A template for anchor bolt installation is available from the manufacturer.

The enclosure contains a sturdy, lockable, hinged door for access to the termination compartment by qualified personnel as described in NFPA 70E and the National Electrical Code. Feeder conductor entry is provided in the bottom of the enclosure for the line side (generator). A hinged bottom plate is provided on the line side for access to line terminations. The permanent load connections (feeding to the facility overcurrent device) exit the enclosure from the bottom.

Terminations

All roll-up generator termination boxes contain a termination/lug landing for three phases and neutral plus ground. Line termination options include mechanical lugs, one-hole and two-hole compression lugs, one-hole and two-hole compression lug provisions, and quick disconnect.

Lug provisions are provided with bolt configurations as described in the catalog data on the following pages. Where lug provisions are ordered, lugs are supplied by others.

Standards and Certifications

- UL 1773 listed—termination boxes
- 600 Vac maximum
- Amperage ratings: 800, 1200, 1600, 2000 and 2500
- Assembly short-circuit rating: 25,000A rms symmetrical
- Marked "Suitable for use on the line side of service equipment" per UL 1773

Listed

Technical Data and Specifications

Approximate Dimensions in Inches (mm)

Roll-Up Generator Termination Box with Line and Load Mechanical Box Lugs ①

Ampere Rating	Dimensions Height	Width	Depth	Mechanical Box Lugs Line Termination Number, Range and Type	Mechanical Box Lugs Load Termination Number, Range and Type	Catalog Number
800	78.00 (1981.2)	36.00 (914.4)	24.00 (609.6)	(3) 4/0–500 kcmil Al/Cu	(3) 4/0–500 kcmil Al/Cu	**GTB08MAMA**
				(3) 4/0–500 kcmil Al/Cu	(2) 3/0–750 kcmil Al/Cu	**GTB08MAMB**
				(2) 3/0–750 kcmil Al/Cu	(3) 4/0–500 kcmil Al/Cu	**GTB08MBMA**
				(2) 3/0–750 kcmil Al/Cu	(2) 3/0–750 kcmil Al/Cu	**GTB08MBMB**
1200	78.00 (1981.2)	36.00 (914.4)	24.00 (609.6)	(4) 4/0–500 kcmil Al/Cu	(4) 4/0–500 kcmil Al/Cu	**GTB12MCMC**
				(4) 4/0–500 kcmil Al/Cu	(3) 3/0–750 kcmil Al/Cu	**GTB12MCMD**
				(3) 3/0–750 kcmil Al/Cu	(4) 4/0–500 kcmil Al/Cu	**GTB12MDMC**
				(3) 3/0–750 kcmil Al/Cu	(3) 3/0–750 kcmil Al/Cu	**GTB12MDMD**
1600	78.00 (1981.2)	36.00 (914.4)	24.00 (609.6)	(5) 4/0–500 kcmil Al/Cu	(5) 4/0–500 kcmil Al/Cu	**GTB16MEME**
				(5) 4/0–500 kcmil Al/Cu	(4) 3/0–750 kcmil Al/Cu	**GTB16MEMF**
				(4) 3/0–750 kcmil Al/Cu	(5) 4/0–500 kcmil Al/Cu	**GTB16MFME**
				(4) 3/0–750 kcmil Al/Cu	(4) 3/0–750 kcmil Al/Cu	**GTB16MFMF**
2000	78.00 (1981.2)	36.00 (914.4)	24.00 (609.6)	(6) 4/0–500 kcmil Al/Cu	(6) 4/0–500 kcmil Al/Cu	**GTB20MGMG**
				(6) 4/0–500 kcmil Al/Cu	(5) 3/0–750 kcmil Al/Cu	**GTB20MGMH**
				(5) 3/0–750 kcmil Al/Cu	(6) 4/0–500 kcmil Al/Cu	**GTB20MHMG**
				(5) 3/0–750 kcmil Al/Cu	(5) 3/0–750 kcmil Al/Cu	**GTB20MHMH**
2500	78.00 (1981.2)	36.00 (914.4)	24.00 (609.6)	(8) 4/0–500 kcmil Al/Cu	(8) 4/0–500 kcmil Al/Cu	**GTB25MJMJ**
				(8) 4/0–500 kcmil Al/Cu	(7) 3/0–750 kcmil Al/Cu	**GTB25MJMK**
				(7) 3/0–750 kcmil Al/Cu	(8) 4/0–500 kcmil Al/Cu	**GTB25MKMJ**
				(7) 3/0–750 kcmil Al/Cu	(7) 3/0–750 kcmil Al/Cu	**GTB25MJMJ**

Roll-Up Generator Termination Box with Line Mechanical Box Lugs; Load Single-Hole Compression Lugs ①②

Ampere Rating	Dimensions Height	Width	Depth	Mechanical Box Lugs Line Termination Number, Range and Type	Single-Hole Compression Load Termination Number, Range and Type	Catalog Number
800	78.00 (1981.2)	36.00 (914.4)	24.00 (609.6)	(3) 4/0–500 kcmil Al/Cu	(3) 4/0–500 kcmil Al/Cu	**GTB08MACA**
				(3) 4/0–500 kcmil Al/Cu	(2) 3/0–750 kcmil Al/Cu	**GTB08MACB**
				(2) 3/0–750 kcmil Al/Cu	(3) 4/0–500 kcmil Al/Cu	**GTB08MBCA**
				(2) 3/0–750 kcmil Al/Cu	(2) 3/0–750 kcmil Al/Cu	**GTB08MBCB**
1200	78.00 (1981.2)	36.00 (914.4)	24.00 (609.6)	(4) 4/0–500 kcmil Al/Cu	(4) 4/0–500 kcmil Al/Cu	**GTB12MCCC**
				(4) 4/0–500 kcmil Al/Cu	(3) 3/0–750 kcmil Al/Cu	**GTB12MCCD**
				(3) 3/0–750 kcmil Al/Cu	(4) 4/0–500 kcmil Al/Cu	**GTB12MDCC**
				(3) 3/0–750 kcmil Al/Cu	(3) 3/0–750 kcmil Al/Cu	**GTB12MDCD**
1600	78.00 (1981.2)	36.00 (914.4)	24.00 (609.6)	(5) 4/0–500 kcmil Al/Cu	(5) 4/0–500 kcmil Al/Cu	**GTB16MECE**
				(5) 4/0–500 kcmil Al/Cu	(4) 3/0–750 kcmil Al/Cu	**GTB16MECF**
				(4) 3/0–750 kcmil Al/Cu	(5) 4/0–500 kcmil Al/Cu	**GTB16MFCE**
				(4) 3/0–750 kcmil Al/Cu	(4) 3/0–750 kcmil Al/Cu	**GTB16MFCF**
2000	78.00 (1981.2)	36.00 (914.4)	24.00 (609.6)	(6) 4/0–500 kcmil Al/Cu	(6) 4/0–500 kcmil Al/Cu	**GTB20MGCG**
				(6) 4/0–500 kcmil Al/Cu	(5) 3/0–750 kcmil Al/Cu	**GTB20MGCH**
				(5) 3/0–750 kcmil Al/Cu	(6) 4/0–500 kcmil Al/Cu	**GTB20MHCG**
				(5) 3/0–750 kcmil Al/Cu	(5) 3/0–750 kcmil Al/Cu	**GTB20MHCH**
2500	78.00 (1981.2)	36.00 (914.4)	24.00 (609.6)	(8) 4/0–500 kcmil Al/Cu	(8) 4/0–500 kcmil Al/Cu	**GTB25MJCJ**
				(8) 4/0–500 kcmil Al/Cu	(7) 3/0–750 kcmil Al/Cu	**GTB25MJCK**
				(7) 3/0–750 kcmil Al/Cu	(8) 4/0–500 kcmil Al/Cu	**GTB25MKCJ**
				(7) 3/0–750 kcmil Al/Cu	(7) 3/0–750 kcmil Al/Cu	**GTB25MJCJ**

Notes

① Line side mechanical lugs are factory selected and installed.

② Load side Anderson, single-hole compression lugs are factory selected and installed.

Approximate Dimensions in Inches (mm)

Roll-Up Generator Termination Box with Line Mechanical Box Lugs; Load Two-Hole Compression Lugs ①②

Ampere Rating	Dimensions Height	Width	Depth	Mechanical Box Lugs Line Termination Number, Range and Type	Two-Hole Compression Load Termination Cu Only Wire Size	Catalog Number
800	78.00 (1981.2)	45.00 (1143.0)	24.00 (609.6)	(3) 4/0–500 kcmil Al/Cu	(3) 350 kcmil Cu only	**GTB08MACL**
				(3) 4/0–500 kcmil Al/Cu	(3) 400 kcmil Cu only	**GTB08MBCM**
				(2) 3/0–750 kcmil Al/Cu	(3) 350 kcmil Cu only	**GTB08MBCL**
				(2) 3/0–750 kcmil Al/Cu	(3) 400 kcmil Cu only	**GTB08MACL**
1200	78.00 (1981.2)	45.00 (1143.0)	24.00 (609.6)	(4) 4/0–500 kcmil Al/Cu	(4) 500 kcmil Cu only	**GTB12MCCN**
				(4) 4/0–500 kcmil Al/Cu	(3) 600 kcmil Cu only	**GTB12MCCP**
				(4) 4/0–500 kcmil Al/Cu	(3) 750 kcmil Cu only	**GTB12MCCQ**
				(3) 3/0–750 kcmil Al/Cu	(4) 500 kcmil Cu only	**GTB12MDCN**
				(3) 3/0–750 kcmil Al/Cu	(3) 600 kcmil Cu only	**GTB12MDCP**
				(3) 3/0–750 kcmil Al/Cu	(3) 750 kcmil Cu only	**GTB12MDCQ**
1600	78.00 (1981.2)	45.00 (1143.0)	24.00 (609.6)	(5) 4/0–500 kcmil Al/Cu	(5) 500 kcmil Cu only	**GTB16MECR**
				(5) 4/0–500 kcmil Al/Cu	(4) 600 kcmil Cu only	**GTB16MECS**
				(5) 4/0–500 kcmil Al/Cu	(4) 750 kcmil Cu only	**GTB16MECT**
				(4) 3/0–750 kcmil Al/Cu	(5) 500 kcmil Cu only	**GTB16MFCR**
				(4) 3/0–750 kcmil Al/Cu	(4) 600 kcmil Cu only	**GTB16MFCS**
				(4) 3/0–750 kcmil Al/Cu	(4) 750 kcmil Cu only	**GTB16MFCT**
2000	78.00 (1981.2)	45.00 (1143.0)	24.00 (609.6)	(6) 4/0–500 kcmil Al/Cu	(6) 500 kcmil Cu only	**GTB20MGCU**
				(6) 4/0–500 kcmil Al/Cu	(5) 600 kcmil Cu only	**GTB20MGCV**
				(6) 4/0–500 kcmil Al/Cu	(5) 750 kcmil Cu only	**GTB20MGCW**
				(5) 3/0–750 kcmil Al/Cu	(6) 500 kcmil Cu only	**GTB20MHCU**
				(5) 3/0–750 kcmil Al/Cu	(5) 600 kcmil Cu only	**GTB20MHCV**
				(5) 3/0–750 kcmil Al/Cu	(5) 750 kcmil Cu only	**GTB20MHCW**
2500	78.00 (1981.2)	45.00 (1143.0)	24.00 (609.6)	(8) 4/0–500 kcmil Al/Cu	(7) 500 kcmil Cu only	**GTB25MJCX**
				(8) 4/0–500 kcmil Al/Cu	(6) 600 kcmil Cu only	**GTB25MJCY**
				(8) 4/0–500 kcmil Al/Cu	(6) 750 kcmil Cu only	**GTB25MJCZ**
				(7) 3/0–750 kcmil Al/Cu	(7) 500 kcmil Cu only	**GTB25MKCX**
				(7) 3/0–750 kcmil Al/Cu	(6) 600 kcmil Cu only	**GTB25MKCY**
				(7) 3/0–750 kcmil Al/Cu	(6) 750 kcmil Cu only	**GTB25MKCZ**

Notes

① Line side mechanical lugs are factory selected and installed.

② Load side factory installed Burndy, two-hole, short barrel compression lugs suitable for copper wire only requires a 45-inch (1143.0 mm) wide enclosure.

Approximate Dimensions in Inches (mm)

Roll-Up Generator Termination Box with Line Mechanical Box Lugs; Load Provisions Only, Single-Hole Compression Lugs ①②

Ampere Rating	Dimensions Height	Width	Depth	Mechanical Box Lugs Line Termination Number, Range and Type	Single-Hole Compression Load Provisions Only Number and Range	Catalog Number
800	78.00 (1981.2)	36.00 (914.4)	24.00 (609.6)	(3) 4/0–500 kcmil Al/Cu	(3) Provisions per phase	**GTB08MAP1**
				(2) 3/0–750 kcmil Al/Cu	(3) Provisions per phase	**GTB08MBP1**
1200	78.00 (1981.2)	36.00 (914.4)	24.00 (609.6)	(4) 4/0–500 kcmil Al/Cu	(4) Provisions per phase	**GTB12MCP2**
				(3) 3/0–750 kcmil Al/Cu	(4) Provisions per phase	**GTB12MDP2**
1600	78.00 (1981.2)	36.00 (914.4)	24.00 (609.6)	(5) 4/0–500 kcmil Al/Cu	(5) Provisions per phase	**GTB16MEP3**
				(4) 3/0–750 kcmil Al/Cu	(5) Provisions per phase	**GTB16MFP3**
2000	78.00 (1981.2)	36.00 (914.4)	24.00 (609.6)	(6) 4/0–500 kcmil Al/Cu	(6) Provisions per phase	**GTB20MGP4**
				(5) 3/0–750 kcmil Al/Cu	(6) Provisions per phase	**GTB20MHP4**
2500	78.00 (1981.2)	36.00 (914.4)	24.00 (609.6)	(8) 4/0–500 kcmil Al/Cu	(8) Provisions per phase	**GTB25MJP5**
				(7) 3/0–750 kcmil Al/Cu	(8) Provisions per phase	**GTB25MKP5**

Roll-Up Generator Termination Box with Line Mechanical Box Lugs; Load Provisions Only, Two-Hole Compression Lugs ①③④

Ampere Rating	Dimensions Height	Width	Depth	Mechanical Box Lugs Line Termination Number, Range and Type	Two-Hole Compression Load Provisions Only Number and Range	Catalog Number
800	78.00 (1981.2)	45.00 (1143.0)	24.00 (609.6)	(3) 4/0–500 kcmil Al/Cu	(3) Provisions per phase	**GTB08MAPA**
				(2) 3/0–750 kcmil Al/Cu	(3) Provisions per phase	**GTB08MBPA**
1200	78.00 (1981.2)	45.00 (1143.0)	24.00 (609.6)	(4) 4/0–500 kcmil Al/Cu	(4) Provisions per phase	**GTB12MCPB**
				(3) 3/0–750 kcmil Al/Cu	(4) Provisions per phase	**GTB12MDPB**
1600	78.00 (1981.2)	45.00 (1143.0)	24.00 (609.6)	(5) 4/0–500 kcmil Al/Cu	(5) Provisions per phase	**GTB16MEPC**
				(4) 3/0–750 kcmil Al/Cu	(5) Provisions per phase	**GTB16MFPC**
2000	78.00 (1981.2)	45.00 (1143.0)	24.00 (609.6)	(6) 4/0–500 kcmil Al/Cu	(6) Provisions per phase	**GTB20MGPD**
				(5) 3/0–750 kcmil Al/Cu	(6) Provisions per phase	**GTB20MHPD**
2500	78.00 (1981.2)	45.00 (1143.0)	24.00 (609.6)	(8) 4/0–500 kcmil Al/Cu	(8) Provisions per phase	**GTB25MJPE**
				(7) 3/0–750 kcmil Al/Cu	(8) Provisions per phase	**GTB25MKPE**

Notes

① Line side mechanical lugs are factory selected and installed.
② Load side factory installed 3/8-inch bolt provisions for single-hole compression lugs (lugs furnished by others).
③ Load side factory installed 1/2-inch bolt provisions on 1-3/4-inch hole centers for two-hole compression lugs (lugs furnished by others).
④ Requires 45-inch (1143.0 mm) wide enclosure.

Approximate Dimensions in Inches (mm)

Roll-Up Generator Termination Box with Line Single-Hole Compression Lugs and Load Mechanical Box Lugs ①②

Ampere Rating	Dimensions Height	Width	Depth	Single-Hole Compression Line Termination Number, Range and Type	Mechanical Box Lugs Load Termination Number, Range and Type	Catalog Number
800	78.00 (1981.2)	36.00 (914.4)	24.00 (609.6)	(3) 4/0–500 kcmil Al/Cu	(3) 4/0–500 kcmil Al/Cu	**GTB08CAMA**
				(3) 4/0–500 kcmil Al/Cu	(2) 3/0–750 kcmil Al/Cu	**GTB08CAMB**
				(2) 3/0–750 kcmil Al/Cu	(3) 4/0–500 kcmil Al/Cu	**GTB08CBMA**
				(2) 3/0–750 kcmil Al/Cu	(2) 3/0–750 kcmil Al/Cu	**GTB08CBMB**
1200	78.00 (1981.2)	36.00 (914.4)	24.00 (609.6)	(4) 4/0–500 kcmil Al/Cu	(4) 4/0–500 kcmil Al/Cu	**GTB12CCMC**
				(4) 4/0–500 kcmil Al/Cu	(3) 3/0–750 kcmil Al/Cu	**GTB12CCMD**
				(3) 3/0–750 kcmil Al/Cu	(4) 4/0–500 kcmil Al/Cu	**GTB12CDMC**
				(3) 3/0–750 kcmil Al/Cu	(3) 3/0–750 kcmil Al/Cu	**GTB12CDMD**
1600	78.00 (1981.2)	36.00 (914.4)	24.00 (609.6)	(5) 4/0–500 kcmil Al/Cu	(5) 4/0–500 kcmil Al/Cu	**GTB16CEME**
				(5) 4/0–500 kcmil Al/Cu	(4) 3/0–750 kcmil Al/Cu	**GTB16CEMF**
				(4) 3/0–750 kcmil Al/Cu	(5) 4/0–500 kcmil Al/Cu	**GTB16CFME**
				(4) 3/0–750 kcmil Al/Cu	(4) 3/0–750 kcmil Al/Cu	**GTB16CFMF**
2000	78.00 (1981.2)	36.00 (914.4)	24.00 (609.6)	(6) 4/0–500 kcmil Al/Cu	(6) 4/0–500 kcmil Al/Cu	**GTB20CGMG**
				(6) 4/0–500 kcmil Al/Cu	(5) 3/0–750 kcmil Al/Cu	**GTB20CGMH**
				(5) 3/0–750 kcmil Al/Cu	(6) 4/0–500 kcmil Al/Cu	**GTB20CHMG**
				(5) 3/0–750 kcmil Al/Cu	(5) 3/0–750 kcmil Al/Cu	**GTB20CHMH**
2500	78.00 (1981.2)	36.00 (914.4)	24.00 (609.6)	(8) 4/0–500 kcmil Al/Cu	(8) 4/0–500 kcmil Al/Cu	**GTB25CJMJ**
				(8) 4/0–500 kcmil Al/Cu	(7) 3/0–750 kcmil Al/Cu	**GTB25CJMK**
				(7) 3/0–750 kcmil Al/Cu	(8) 4/0–500 kcmil Al/Cu	**GTB25CKMJ**
				(7) 3/0–750 kcmil Al/Cu	(7) 3/0–750 kcmil Al/Cu	**GTB25CJMK**

Roll-Up Generator Termination Box with Line and Load Single-Hole Compression Lugs ③

Ampere Rating	Dimensions Height	Width	Depth	Single-Hole Compression Line Termination Number, Range and Type	Single-Hole Compression Load Termination Number, Range and Type	Catalog Number
800	78.00 (1981.2)	36.00 (914.4)	24.00 (609.6)	(3) 4/0–500 kcmil Al/Cu	(3) 4/0–500 kcmil Al/Cu	**GTB08CACA**
				(3) 4/0–500 kcmil Al/Cu	(2) 3/0–750 kcmil Al/Cu	**GTB08CACB**
				(2) 3/0–750 kcmil Al/Cu	(3) 4/0–500 kcmil Al/Cu	**GTB08CBCA**
				(2) 3/0–750 kcmil Al/Cu	(2) 3/0–750 kcmil Al/Cu	**GTB08CBCB**
1200	78.00 (1981.2)	36.00 (914.4)	24.00 (609.6)	(4) 4/0–500 kcmil Al/Cu	(4) 4/0–500 kcmil Al/Cu	**GTB12CCCC**
				(4) 4/0–500 kcmil Al/Cu	(3) 3/0–750 kcmil Al/Cu	**GTB12CCCD**
				(3) 3/0–750 kcmil Al/Cu	(4) 4/0–500 kcmil Al/Cu	**GTB12CDCC**
				(3) 3/0–750 kcmil Al/Cu	(3) 3/0–750 kcmil Al/Cu	**GTB12CDCD**
1600	78.00 (1981.2)	36.00 (914.4)	24.00 (609.6)	(5) 4/0–500 kcmil Al/Cu	(5) 4/0–500 kcmil Al/Cu	**GTB16CECE**
				(5) 4/0–500 kcmil Al/Cu	(4) 3/0–750 kcmil Al/Cu	**GTB16CECF**
				(4) 3/0–750 kcmil Al/Cu	(5) 4/0–500 kcmil Al/Cu	**GTB16CFCE**
				(4) 3/0–750 kcmil Al/Cu	(4) 3/0–750 kcmil Al/Cu	**GTB16CFCF**
2000	78.00 (1981.2)	36.00 (914.4)	24.00 (609.6)	(6) 4/0–500 kcmil Al/Cu	(6) 4/0–500 kcmil Al/Cu	**GTB20CGCG**
				(6) 4/0–500 kcmil Al/Cu	(5) 3/0–750 kcmil Al/Cu	**GTB20CGCH**
				(5) 3/0–750 kcmil Al/Cu	(6) 4/0–500 kcmil Al/Cu	**GTB20CHCG**
				(5) 3/0–750 kcmil Al/Cu	(5) 3/0–750 kcmil Al/Cu	**GTB20CHCH**
2500	78.00 (1981.2)	36.00 (914.4)	24.00 (609.6)	(8) 4/0–500 kcmil Al/Cu	(8) 4/0–500 kcmil Al/Cu	**GTB25CJCJ**
				(8) 4/0–500 kcmil Al/Cu	(7) 3/0–750 kcmil Al/Cu	**GTB25CJCK**
				(7) 3/0–750 kcmil Al/Cu	(8) 4/0–500 kcmil Al/Cu	**GTB25CKCJ**
				(7) 3/0–750 kcmil Al/Cu	(7) 3/0–750 kcmil Al/Cu	**GTB25CJCK**

Notes

① Line side Anderson, single-hole compression lugs are factory selected and installed.
② Load side mechanical lugs are factory selected and installed.
③ Line side and load Anderson, single-hole compression lugs are factory selected and installed.

Approximate Dimensions in Inches (mm)

Roll-Up Generator Termination Box with Line Single-Hole Compression Lugs; Load Two-Hole Compression Lugs ①②③

Ampere Rating	Dimensions Height	Width	Depth	Single-Hole Compression Line Termination Number, Range and Type	Two-Hole Compression Load Termination Cu Only Wire Size	Catalog Number
800	78.00 (1981.2)	45.00 (1143.0)	24.00 (609.6)	(3) 4/0–500 kcmil Al/Cu	(3) 350 kcmil Cu only	**GTB08CACL**
				(3) 4/0–500 kcmil Al/Cu	(3) 400 kcmil Cu only	**GTB08CACM**
				(2) 3/0–750 kcmil Al/Cu	(3) 350 kcmil Cu only	**GTB08CBCL**
				(2) 3/0–750 kcmil Al/Cu	(3) 400 kcmil Cu only	**GTB08CBCM**
1200	78.00 (1981.2)	45.00 (1143.0)	24.00 (609.6)	(4) 4/0–500 kcmil Al/Cu	(4) 500 kcmil Cu only	**GTB12CCCN**
				(4) 4/0–500 kcmil Al/Cu	(3) 600 kcmil Cu only	**GTB12CCCP**
				(4) 4/0–500 kcmil Al/Cu	(3) 750 kcmil Cu only	**GTB12CCCQ**
				(3) 3/0–750 kcmil Al/Cu	(4) 500 kcmil Cu only	**GTB12CDCN**
				(3) 3/0–750 kcmil Al/Cu	(3) 600 kcmil Cu only	**GTB12CDCP**
				(3) 3/0–750 kcmil Al/Cu	(3) 750 kcmil Cu only	**GTB12CDCQ**
1600	78.00 (1981.2)	45.00 (1143.0)	24.00 (609.6)	(5) 4/0–500 kcmil Al/Cu	(5) 500 kcmil Cu only	**GTB16CECR**
				(5) 4/0–500 kcmil Al/Cu	(4) 600 kcmil Cu only	**GTB16CECS**
				(5) 4/0–500 kcmil Al/Cu	(4) 750 kcmil Cu only	**GTB16CECT**
				(4) 3/0–750 kcmil Al/Cu	(5) 500 kcmil Cu only	**GTB16CFCR**
				(4) 3/0–750 kcmil Al/Cu	(4) 600 kcmil Cu only	**GTB16CFCS**
				(4) 3/0–750 kcmil Al/Cu	(4) 750 kcmil Cu only	**GTB16CFCT**
2000	78.00 (1981.2)	45.00 (1143.0)	24.00 (609.6)	(6) 4/0–500 kcmil Al/Cu	(6) 500 kcmil Cu only	**GTB20CGCU**
				(6) 4/0–500 kcmil Al/Cu	(5) 600 kcmil Cu only	**GTB20CGCV**
				(6) 4/0–500 kcmil Al/Cu	(5) 750 kcmil Cu only	**GTB20CGCW**
				(5) 3/0–750 kcmil Al/Cu	(6) 500 kcmil Cu only	**GTB20CHCU**
				(5) 3/0–750 kcmil Al/Cu	(5) 600 kcmil Cu only	**GTB20CHCV**
				(5) 3/0–750 kcmil Al/Cu	(5) 750 kcmil Cu only	**GTB20CHCW**
2500	78.00 (1981.2)	45.00 (1143.0)	24.00 (609.6)	(8) 4/0–500 kcmil Al/Cu	(7) 500 kcmil Cu only	**GTB25CJCX**
				(8) 4/0–500 kcmil Al/Cu	(6) 600 kcmil Cu only	**GTB25CJCY**
				(8) 4/0–500 kcmil Al/Cu	(6) 750 kcmil Cu only	**GTB25CJCZ**
				(7) 3/0–750 kcmil Al/Cu	(7) 500 kcmil Cu only	**GTB25CKCX**
				(7) 3/0–750 kcmil Al/Cu	(6) 600 kcmil Cu only	**GTB25CKCY**
				(7) 3/0–750 kcmil Al/Cu	(6) 750 kcmil Cu only	**GTB25CKCZ**

Roll-Up Generator Termination Box with Line Single-Hole Compression Lugs; Load Provisions Only, Single-Hole Compression Lugs ①④

Ampere Rating	Dimensions Height	Width	Depth	Single-Hole Compression Line Termination Number, Range and Type	Single-Hole Compression Load Provisions Only Number and Range	Catalog Number
800	78.00 (1981.2)	36.00 (914.4)	24.00 (609.6)	(3) 4/0–500 kcmil Al/Cu	(3) Provisions per phase	**GTB08CAP1**
				(2) 3/0–750 kcmil Al/Cu	(3) Provisions per phase	**GTB08CBP1**
1200	78.00 (1981.2)	36.00 (914.4)	24.00 (609.6)	(4) 4/0–500 kcmil Al/Cu	(4) Provisions per phase	**GTB12CCP2**
				(3) 3/0–750 kcmil Al/Cu	(4) Provisions per phase	**GTB12CDP2**
1600	78.00 (1981.2)	36.00 (914.4)	24.00 (609.6)	(5) 4/0–500 kcmil Al/Cu	(5) Provisions per phase	**GTB16CEP3**
				(4) 3/0–750 kcmil Al/Cu	(5) Provisions per phase	**GTB16CFP3**
2000	78.00 (1981.2)	36.00 (914.4)	24.00 (609.6)	(6) 4/0–500 kcmil Al/Cu	(6) Provisions per phase	**GTB20CGP4**
				(5) 3/0–750 kcmil Al/Cu	(6) Provisions per phase	**GTB20CHP4**
2500	78.00 (1981.2)	36.00 (914.4)	24.00 (609.6)	(8) 4/0–500 kcmil Al/Cu	(8) Provisions per phase	**GTB25CJP5**
				(7) 3/0–750 kcmil Al/Cu	(8) Provisions per phase	**GTB25CKP5**

Notes

① Line side Anderson, single-hole compression lugs are factory selected and installed.
② Load side factory installed Burndy, two-hole, short barrel compression lugs suitable for copper wire only.
③ Requires 45-inch (1143.0 mm) wide enclosure.
④ Load side factory installed 3/8-inch bolt provisions for single-hole compression lugs (lugs furnished by others).

Approximate Dimensions in Inches (mm)

Roll-Up Generator Termination Box with Single-Hole Compression Lugs; Load Provisions Only, Two-Hole Compression Lugs) ①②③

Ampere Rating	Dimensions Height	Width	Depth	Single-Hole Compression Line Termination Number, Range and Type	Two-Hole Compression Load Provisions Only Number and Range	Catalog Number
800	78.00 (1981.2)	45.00 (1143.0)	24.00 (609.6)	(3) 4/0–500 kcmil Al/Cu	(3) Provisions per phase	**GTB08CAPA**
				(2) 3/0–750 kcmil Al/Cu	(3) Provisions per phase	**GTB08CBPA**
1200	78.00 (1981.2)	45.00 (1143.0)	24.00 (609.6)	(4) 4/0–500 kcmil Al/Cu	(4) Provisions per phase	**GTB12CCPB**
				(3) 3/0–750 kcmil Al/Cu	(4) Provisions per phase	**GTB12CDPB**
1600	78.00 (1981.2)	45.00 (1143.0)	24.00 (609.6)	(5) 4/0–500 kcmil Al/Cu	(5) Provisions per phase	**GTB16CEPC**
				(4) 3/0–750 kcmil Al/Cu	(5) Provisions per phase	**GTB16CGPC**
2000	78.00 (1981.2)	45.00 (1143.0)	24.00 (609.6)	(6) 4/0–500 kcmil Al/Cu	(6) Provisions per phase	**GTB20CGPD**
				(5) 3/0–750 kcmil Al/Cu	(6) Provisions per phase	**GTB20CHPD**
2500	78.00 (1981.2)	45.00 (1143.0)	24.00 (609.6)	(8) 4/0–500 kcmil Al/Cu	(8) Provisions per phase	**GTB25CJPE**
				(7) 3/0–750 kcmil Al/Cu	(8) Provisions per phase	**GTB25CKPE**

Roll-Up Generator Termination Box with Line Two-Hole Compression Lugs and Load Mechanical Box Lugs ③④⑤

Ampere Rating	Dimensions Height	Width	Depth	Two-Hole Compression Line Termination Cu Only Wire Size	Mechanical Box Lugs Load Termination Number, Range and Type	Catalog Number
800	78.00 (1981.2)	45.00 (1143.0)	24.00 (609.6)	(3) 350 kcmil Cu only	(3) 4/0–500 kcmil Al/Cu	**GTB08CLMA**
				(3) 350 kcmil Cu only	(2) 3/0–750 kcmil Al/Cu	**GTB08CLMB**
				(3) 400 kcmil Cu only	(3) 4/0–500 kcmil Al/Cu	**GTB08CMMA**
				(3) 400 kcmil Cu only	(2) 3/0–750 kcmil Al/Cu	**GTB08CMMB**
1200	78.00 (1981.2)	45.00 (1143.0)	24.00 (609.6)	(4) 500 kcmil Cu only	(4) 4/0–500 kcmil Al/Cu	**GTB12CNMC**
				(4) 500 kcmil Cu only	(3) 3/0–750 kcmil Al/Cu	**GTB12CNMD**
				(3) 600 kcmil Cu only	(4) 4/0–500 kcmil Al/Cu	**GTB12CPMC**
				(3) 600 kcmil Cu only	(3) 3/0–750 kcmil Al/Cu	**GTB12CPMD**
				(3) 750 kcmil Cu only	(4) 4/0–500 kcmil Al/Cu	**GTB12CQMC**
				(3) 750 kcmil Cu only	(3) 3/0–750 kcmil Al/Cu	**GTB12CQMD**
1600	78.00 (1981.2)	45.00 (1143.0)	24.00 (609.6)	(5) 500 kcmil Cu only	(5) 4/0–500 kcmil Al/Cu	**GTB16CRME**
				(5) 500 kcmil Cu only	(4) 3/0–750 kcmil Al/Cu	**GTB16CRMF**
				(4) 600 kcmil Cu only	(5) 4/0–500 kcmil Al/Cu	**GTB16CSME**
				(4) 600 kcmil Cu only	(4) 3/0–750 kcmil Al/Cu	**GTB16CSMF**
				(4) 750 kcmil Cu only	(5) 4/0–500 kcmil Al/Cu	**GTB16CTME**
				(4) 750 kcmil Cu only	(4) 3/0–750 kcmil Al/Cu	**GTB16CTMF**
2000	78.00 (1981.2)	45.00 (1143.0)	24.00 (609.6)	(6) 500 kcmil Cu only	(6) 4/0–500 kcmil Al/Cu	**GTB20CUMG**
				(6) 500 kcmil Cu only	(5) 3/0–750 kcmil Al/Cu	**GTB20CUMH**
				(5) 600 kcmil Cu only	(6) 4/0–500 kcmil Al/Cu	**GTB20CVMG**
				(5) 600 kcmil Cu only	(5) 3/0–750 kcmil Al/Cu	**GTB20CVMH**
				(5) 750 kcmil Cu only	(6) 4/0–500 kcmil Al/Cu	**GTB20CWMG**
				(5) 750 kcmil Cu only	(5) 3/0–750 kcmil Al/Cu	**GTB20CWMH**
2500	78.00 (1981.2)	45.00 (1143.0)	24.00 (609.6)	(7) 500 kcmil Cu only	(8) 4/0–500 kcmil Al/Cu	**GTB25CXMJ**
				(7) 500 kcmil Cu only	(7) 3/0–750 kcmil Al/Cu	**GTB25CXMK**
				(6) 600 kcmil Cu only	(8) 4/0–500 kcmil Al/Cu	**GTB25CYMJ**
				(6) 600 kcmil Cu only	(7) 3/0–750 kcmil Al/Cu	**GTB25CYMK**
				(6) 750 kcmil Cu only	(8) 4/0–500 kcmil Al/Cu	**GTB25CZMJ**
				(6) 750 kcmil Cu only	(7) 3/0–750 kcmil Al/Cu	**GTB25CZMK**

Notes

① Line side Anderson, single-hole compression lugs are factory selected and installed.
② Load side factory installed 1/2-inch bolt provisions on 1-3/4-inch hole centers for two-hole compression lugs (lugs furnished by others).
③ Requires 45-inch (1143.0 mm) wide enclosure.
④ Line side factory installed Burndy, two-hole, short barrel compression lugs suitable for copper wire only.
⑤ Load side mechanical lugs are factory selected and installed.

Approximate Dimensions in Inches (mm)

Roll-Up Generator Termination Box with Line Two-Hole Compression Lugs and Load Single-Hole Compression Lugs

Ampere Rating	Dimensions Height	Width	Depth	Two-Hole Compression Line Termination Cu Only Wire Size	Single-Hole Compression Load Termination Number, Range and Type	Catalog Number
800	78.00 (1981.2)	45.00 (1143.0)	24.00 (609.6)	(3) 350 kcmil Cu only	(3) 4/0–500 kcmil Al/Cu	**GTB08CLCA**
				(3) 350 kcmil Cu only	(2) 3/0–750 kcmil Al/Cu	**GTB08CLCB**
				(3) 400 kcmil Cu only	(3) 4/0–500 kcmil Al/Cu	**GTB08CMCA**
				(3) 400 kcmil Cu only	(2) 3/0–750 kcmil Al/Cu	**GTB08CMCB**
1200	78.00 (1981.2)	45.00 (1143.0)	24.00 (609.6)	(4) 500 kcmil Cu only	(4) 4/0–500 kcmil Al/Cu	**GTB12CNCC**
				(4) 500 kcmil Cu only	(3) 3/0–750 kcmil Al/Cu	**GTB12CNCD**
				(3) 600 kcmil Cu only	(4) 4/0–500 kcmil Al/Cu	**GTB12CPCC**
				(3) 600 kcmil Cu only	(3) 3/0–750 kcmil Al/Cu	**GTB12CPCD**
				(3) 750 kcmil Cu only	(4) 4/0–500 kcmil Al/Cu	**GTB12CQCC**
				(3) 750 kcmil Cu only	(3) 3/0–750 kcmil Al/Cu	**GTB12CQCD**
1600	78.00 (1981.2)	45.00 (1143.0)	24.00 (609.6)	(5) 500 kcmil Cu only	(5) 4/0–500 kcmil Al/Cu	**GTB16CRCE**
				(5) 500 kcmil Cu only	(4) 3/0–750 kcmil Al/Cu	**GTB16CRCF**
				(4) 600 kcmil Cu only	(5) 4/0–500 kcmil Al/Cu	**GTB16CSCE**
				(4) 600 kcmil Cu only	(4) 3/0–750 kcmil Al/Cu	**GTB16CSCF**
				(4) 750 kcmil Cu only	(5) 4/0–500 kcmil Al/Cu	**GTB16CTCE**
				(4) 750 kcmil Cu only	(4) 3/0–750 kcmil Al/Cu	**GTB16CTCF**
2000	78.00 (1981.2)	45.00 (1143.0)	24.00 (609.6)	(6) 500 kcmil Cu only	(6) 4/0–500 kcmil Al/Cu	**GTB20CUCG**
				(6) 500 kcmil Cu only	(5) 3/0–750 kcmil Al/Cu	**GTB20CUCH**
				(5) 600 kcmil Cu only	(6) 4/0–500 kcmil Al/Cu	**GTB20CVCG**
				(5) 600 kcmil Cu only	(5) 3/0–750 kcmil Al/Cu	**GTB20CVCH**
				(5) 750 kcmil Cu only	(6) 4/0–500 kcmil Al/Cu	**GTB20CWCG**
				(5) 750 kcmil Cu only	(5) 3/0–750 kcmil Al/Cu	**GTB20CWCH**
2500	78.00 (1981.2)	45.00 (1143.0)	24.00 (609.6)	(7) 500 kcmil Cu only	(8) 4/0–500 kcmil Al/Cu	**GTB25CXCJ**
				(7) 500 kcmil Cu only	(7) 3/0–750 kcmil Al/Cu	**GTB25CXCK**
				(6) 600 kcmil Cu only	(8) 4/0–500 kcmil Al/Cu	**GTB25CYCJ**
				(6) 600 kcmil Cu only	(7) 3/0–750 kcmil Al/Cu	**GTB25CYCK**
				(6) 750 kcmil Cu only	(8) 4/0–500 kcmil Al/Cu	**GTB25CZCJ**
				(6) 750 kcmil Cu only	(7) 3/0–750 kcmil Al/Cu	**GTB25CZCK**

Notes

Line side factory installed Burndy, two-hole, short barrel compression lugs suitable for copper wire only.
Load side Anderson, single-hole compression lugs are factory selected and installed.
Requires 45-inch (1143.0 mm) wide enclosure.

Approximate Dimensions in Inches (mm)

Roll-Up Generator Termination Box with Line Two-Hole Compression Lugs; Load Two-Hole Compression Lugs

Ampere Rating	Dimensions Height	Width	Depth	Two-Hole Compression Line Termination Cu Only Wire Size	Two-Hole Compression Load Termination Cu Only Wire Size	Catalog Number
800	78.00 (1981.2)	45.00 (1143.0)	24.00 (609.6)	(3) 350 kcmil Cu only	(3) 350 kcmil Cu only	**GTB08CLCL**
				(3) 350 kcmil Cu only	(3) 400 kcmil Cu only	**GTB08CLCM**
				(3) 400 kcmil Cu only	(3) 350 kcmil Cu only	**GTB08CMCL**
				(3) 400 kcmil Cu only	(3) 400 kcmil Cu only	**GTB08CMCM**
1200	78.00 (1981.2)	45.00 (1143.0)	24.00 (609.6)	(4) 500 kcmil Cu only	(4) 500 kcmil Cu only	**GTB12CNCN**
				(4) 500 kcmil Cu only	(3) 600 kcmil Cu only	**GTB12CNCP**
				(4) 500 kcmil Cu only	(3) 750 kcmil Cu only	**GTB12CNCQ**
				(3) 600 kcmil Cu only	(4) 500 kcmil Cu only	**GTB12CPCN**
				(3) 600 kcmil Cu only	(3) 600 kcmil Cu only	**GTB12CPCP**
				(3) 600 kcmil Cu only	(3) 750 kcmil Cu only	**GTB12CPCQ**
				(3) 750 kcmil Cu only	(4) 500 kcmil Cu only	**GTB12CQCN**
				(3) 750 kcmil Cu only	(3) 600 kcmil Cu only	**GTB12CQCP**
				(3) 750 kcmil Cu only	(3) 750 kcmil Cu only	**GTB12CQCQ**
1600	78.00 (1981.2)	45.00 (1143.0)	24.00 (609.6)	(5) 500 kcmil Cu only	(5) 500 kcmil Cu only	**GTB16CRCR**
				(5) 500 kcmil Cu only	(4) 600 kcmil Cu only	**GTB16CRCS**
				(5) 500 kcmil Cu only	(4) 750 kcmil Cu only	**GTB16CRCT**
				(4) 600 kcmil Cu only	(5) 500 kcmil Cu only	**GTB16CSCR**
				(4) 600 kcmil Cu only	(4) 600 kcmil Cu only	**GTB16CSCS**
				(4) 600 kcmil Cu only	(4) 750 kcmil Cu only	**GTB16CSCT**
				(4) 750 kcmil Cu only	(5) 500 kcmil Cu only	**GTB16CTCR**
				(4) 750 kcmil Cu only	(4) 600 kcmil Cu only	**GTB16CTCS**
				(4) 750 kcmil Cu only	(4) 750 kcmil Cu only	**GTB16CTCT**
2000	78.00 (1981.2)	45.00 (1143.0)	24.00 (609.6)	(6) 500 kcmil Cu only	(6) 500 kcmil Cu only	**GTB20CUCU**
				(6) 500 kcmil Cu only	(5) 600 kcmil Cu only	**GTB20CUCV**
				(6) 500 kcmil Cu only	(5) 750 kcmil Cu only	**GTB20CUCW**
				(5) 600 kcmil Cu only	(6) 500 kcmil Cu only	**GTB20CVCU**
				(5) 600 kcmil Cu only	(5) 600 kcmil Cu only	**GTB20CVCU**
				(5) 600 kcmil Cu only	(5) 750 kcmil Cu only	**GTB20CVCW**
				(5) 750 kcmil Cu only	(6) 500 kcmil Cu only	**GTB20CWCU**
				(5) 750 kcmil Cu only	(5) 600 kcmil Cu only	**GTB20CWCV**
				(5) 750 kcmil Cu only	(5) 750 kcmil Cu only	**GTB20CWCW**
2500	78.00 (1981.2)	45.00 (1143.0)	24.00 (609.6)	(7) 500 kcmil Cu only	(7) 500 kcmil Cu only	**GTB25CXCX**
				(7) 500 kcmil Cu only	(6) 600 kcmil Cu only	**GTB25CXCY**
				(7) 500 kcmil Cu only	(6) 750 kcmil Cu only	**GTB25CXCZ**
				(6) 600 kcmil Cu only	(7) 500 kcmil Cu only	**GTB25CYCX**
				(6) 600 kcmil Cu only	(6) 600 kcmil Cu only	**GTB25CYCY**
				(6) 600 kcmil Cu only	(6) 750 kcmil Cu only	**GTB25CYCZ**
				(6) 750 kcmil Cu only	(7) 500 kcmil Cu only	**GTB25CZCX**
				(6) 750 kcmil Cu only	(6) 600 kcmil Cu only	**GTB25CZCY**
				(6) 750 kcmil Cu only	(6) 750 kcmil Cu only	**GTB25CZCZ**

Notes

Line and load side factory installed Burndy, two-hole, short barrel compression lugs suitable for copper wire only.

Requires 45-inch (1143.0 mm) wide enclosure.

Approximate Dimensions in Inches (mm)

Roll-Up Generator Termination Box with Line Two-Hole Compression Lugs; Load Provisions Only, Single-Hole Compression Lugs ①②③

Ampere Rating	Dimensions Height	Width	Depth	Two-Hole Compression Line Termination Cu Only Wire Size	Single-Hole Compression Load Provisions Only Number and Range	Catalog Number
800	78.00 (1981.2)	45.00 (1143.0)	24.00 (609.6)	(3) 350 kcmil Cu only	(3) Provisions per phase	**GTB08CLP1**
				(3) 400 kcmil Cu only	(3) Provisions per phase	**GTB08CMP1**
1200	78.00 (1981.2)	45.00 (1143.0)	24.00 (609.6)	(4) 500 kcmil Cu only	(4) Provisions per phase	**GTB12CNP2**
				(3) 600 kcmil Cu only	(4) Provisions per phase	**GTB12CPP2**
				(3) 750 kcmil Cu only	(4) Provisions per phase	**GTB12CQP2**
2000	78.00 (1981.2)	45.00 (1143.0)	24.00 (609.6)	(6) 500 kcmil Cu only	(6) Provisions per phase	**GTB20CUP4**
				(5) 600 kcmil Cu only	(6) Provisions per phase	**GTB20CVP4**
				(5) 750 kcmil Cu only	(6) Provisions per phase	**GTB20CWP4**
2500	78.00 (1981.2)	45.00 (1143.0)	24.00 (609.6)	(7) 500 kcmil Cu only	(8) Provisions per phase	**GTB25CXP5**
				(6) 600 kcmil Cu only	(8) Provisions per phase	**GTB25CYP6**
				(6) 750 kcmil Cu only	(8) Provisions per phase	**GTB25CZP6**

Roll-Up Generator Termination Box with Two-Hole Compression Lugs; Load Provisions Only, Two-Hole Compression Lugs ④

Ampere Rating	Dimensions Height	Width	Depth	Two-Hole Compression Line Termination Cu Only Wire Size	Two-Hole Compression Load Provisions Only Number and Range	Catalog Number
800	78.00 (1981.2)	45.00 (1143.0)	24.00 (609.6)	(3) 350 kcmil Cu only	(3) Provisions per phase	**GTB08CLPA**
				(3) 400 kcmil Cu only	(3) Provisions per phase	**GTB08CMPA**
1200	78.00 (1981.2)	45.00 (1143.0)	24.00 (609.6)	(4) 500 kcmil Cu only	(4) Provisions per phase	**GTB12CNPB**
				(3) 600 kcmil Cu only	(4) Provisions per phase	**GTB12CPPB**
				(3) 750 kcmil Cu only	(4) Provisions per phase	**GTB12CQPB**
1600	78.00 (1981.2)	45.00 (1143.0)	24.00 (609.6)	(5) 500 kcmil Cu only	(5) Provisions per phase	**GTB16CRPC**
				(4) 600 kcmil Cu only	(5) Provisions per phase	**GTB16CSPC**
				(4) 750 kcmil Cu only	(5) Provisions per phase	**GTB16CTPC**
2000	78.00 (1981.2)	45.00 (1143.0)	24.00 (609.6)	(6) 500 kcmil Cu only	(6) Provisions per phase	**GTB20CUPD**
				(5) 600 kcmil Cu only	(6) Provisions per phase	**GTB20CVPD**
				(5) 750 kcmil Cu only	(6) Provisions per phase	**GTB20CWPD**
2500	78.00 (1981.2)	45.00 (1143.0)	24.00 (609.6)	(7) 500 kcmil Cu only	(8) Provisions per phase	**GTB25CXPE**
				(6) 600 kcmil Cu only	(8) Provisions per phase	**GTB25CYPE**
				(6) 750 kcmil Cu only	(8) Provisions per phase	**GTB25CZPE**

Notes

① Line side factory installed Burndy, two-hole, short barrel compression lugs suitable for copper wire only.
② Load side factory installed 3/8-inch bolt provisions for single-hole compression lugs (lugs furnished by others).
③ Requires 45-inch (1143.0 mm) wide enclosure.
④ Load side factory installed 1/2-inch bolt provisions on 1-3/4-inch hole centers for two-hole compression lugs (lugs furnished by others).

Approximate Dimensions in Inches (mm)

Roll-Up Generator Termination Box with Line Single-Hole Compression Lug Provisions; Load Mechanical Box Lugs ①②

Ampere Rating	Dimensions Height	Width	Depth	Single-Hole Compression Line Provisions Only Number and Range	Mechanical Box Lugs Load Termination Number, Range and Type	Catalog Number
800	78.00 (1981.2)	36.00 (914.4)	24.00 (609.6)	(3) Provisions per phase	(3) 4/0–500 kcmil Al/Cu	**GTB08P1MA**
				(3) Provisions per phase	(2) 3/0–750 kcmil Al/Cu	**GTB08P1MB**
1200	78.00 (1981.2)	36.00 (914.4)	24.00 (609.6)	(4) Provisions per phase	(4) 4/0–500 kcmil Al/Cu	**GTB12P2MC**
				(4) Provisions per phase	(3) 3/0–750 kcmil Al/Cu	**GTB12P2MD**
1600	78.00 (1981.2)	36.00 (914.4)	24.00 (609.6)	(5) Provisions per phase	(5) 4/0–500 kcmil Al/Cu	**GTB16P3ME**
				(5) Provisions per phase	(4) 3/0–750 kcmil Al/Cu	**GTB16P3MF**
2000	78.00 (1981.2)	36.00 (914.4)	24.00 (609.6)	(6) Provisions per phase	(6) 4/0–500 kcmil Al/Cu	**GTB20P4MG**
				(6) Provisions per phase	(5) 3/0–750 kcmil Al/Cu	**GTB20P4MH**
2500	78.00 (1981.2)	36.00 (914.4)	24.00 (609.6)	(8) Provisions per phase	(8) 4/0–500 kcmil Al/Cu	**GTB25P5MJ**
				(8) Provisions per phase	(7) 3/0–750 kcmil Al/Cu	**GTB25P5MK**

Roll-Up Generator Termination Box with Line Single-Hole Compression Lug Provisions; Load Single-Hole Compression Lugs ①③

Ampere Rating	Dimensions Height	Width	Depth	Single-Hole Compression Line Provisions Only Number and Range	Single-Hole Compression Load Termination Number, Range and Type	Catalog Number
800	78.00 (1981.2)	36.00 (914.4)	24.00 (609.6)	(3) Provisions per phase	(3) 4/0–500 kcmil Al/Cu	**GTB08P1CA**
				(3) Provisions per phase	(2) 3/0–750 kcmil Al/Cu	**GTB08P1CB**
1200	78.00 (1981.2)	36.00 (914.4)	24.00 (609.6)	(4) Provisions per phase	(4) 4/0–500 kcmil Al/Cu	**GTB12P2CC**
				(4) Provisions per phase	(3) 3/0–750 kcmil Al/Cu	**GTB12P2CD**
1600	78.00 (1981.2)	36.00 (914.4)	24.00 (609.6)	(5) Provisions per phase	(5) 4/0–500 kcmil Al/Cu	**GTB16P3CE**
				(5) Provisions per phase	(4) 3/0–750 kcmil Al/Cu	**GTB16P3CF**
2000	78.00 (1981.2)	36.00 (914.4)	24.00 (609.6)	(6) Provisions per phase	(6) 4/0–500 kcmil Al/Cu	**GTB20P4CG**
				(6) Provisions per phase	(5) 3/0–750 kcmil Al/Cu	**GTB20P4CH**
2500	78.00 (1981.2)	36.00 (914.4)	24.00 (609.6)	(8) Provisions per phase	(8) 4/0–500 kcmil Al/Cu	**GTB25P5CJ**
				(8) Provisions per phase	(7) 3/0–750 kcmil Al/Cu	**GTB25P5CK**

Notes

① Line side factory installed 3/8-inch bolt provisions for single-hole compression lugs (lugs furnished by others).
② Load side mechanical lugs are factory selected and installed.
③ Load side Anderson, single-hole compression lugs are factory selected and installed.

Approximate Dimensions in Inches (mm)

Roll-Up Generator Termination Box with Line Single-Hole Compression Lug Provisions; Load Two-Hole Compression Lugs ①②③

Ampere Rating	Dimensions Height	Width	Depth	Single-Hole Compression Line Provisions Only Number and Range	Two-Hole Compression Load Termination Cu Only Wire Size	Catalog Number
800	78.00 (1981.2)	45.00 (1143.0)	24.00 (609.6)	(3) 4/0–500 kcmil	(3) 350 kcmil Cu only	**GTB08P1CL**
				(3) 4/0–500 kcmil	(3) 400 kcmil Cu only	**GTB08P1CM**
1200	78.00 (1981.2)	45.00 (1143.0)	24.00 (609.6)	(4) 4/0–500 kcmil	(4) 500 kcmil Cu only	**GTB12P2CN**
				(4) 4/0–500 kcmil	(3) 600 kcmil Cu only	**GTB12P2CP**
				(4) 4/0–500 kcmil	(3) 750 kcmil Cu only	**GTB12P2CQ**
1600	78.00 (1981.2)	45.00 (1143.0)	24.00 (609.6)	(5) 4/0–500 kcmil	(5) 500 kcmil Cu only	**GTB16P3CR**
				(5) 4/0–500 kcmil	(4) 600 kcmil Cu only	**GTB16P3CS**
				(5) 4/0–500 kcmil	(4) 750 kcmil Cu only	**GTB16P3CT**
2000	78.00 (1981.2)	45.00 (1143.0)	24.00 (609.6)	(6) 4/0–500 kcmil	(6) 500 kcmil Cu only	**GTB20P4CU**
				(6) 4/0–500 kcmil	(5) 600 kcmil Cu only	**GTB20P4CU**
				(6) 4/0–500 kcmil	(5) 750 kcmil Cu only	**GTB20P4CW**
2500	78.00 (1981.2)	45.00 (1143.0)	24.00 (609.6)	(8) 4/0–500 kcmil	(7) 500 kcmil Cu only	**GTB25P5CX**
				(8) 4/0–500 kcmil	(6) 600 kcmil Cu only	**GTB25P5CY**
				(8) 4/0–500 kcmil	(6) 750 kcmil Cu only	**GTB25P5CZ**

Roll-Up Generator Termination Box with Line Single-Hole Compression Lug Provisions; Load Single-Hole Compression Lugs ④

Ampere Rating	Dimensions Height	Width	Depth	Single-Hole Compression Line Provisions Only Number and Range	Single-Hole Compression Load Provisions Only Number and Range	Catalog Number
800	78.00 (1981.2)	36.00 (914.4)	24.00 (609.6)	(3) Provisions per phase	(3) Provisions per phase	**GTB08P1P1**
1200	78.00 (1981.2)	36.00 (914.4)	24.00 (609.6)	(4) Provisions per phase	(4) Provisions per phase	**GTB12P2P2**
1600	78.00 (1981.2)	36.00 (914.4)	24.00 (609.6)	(5) Provisions per phase	(5) Provisions per phase	**GTB16P3P3**
2000	78.00 (1981.2)	36.00 (914.4)	24.00 (609.6)	(6) Provisions per phase	(6) Provisions per phase	**GTB20P4P4**
2500	78.00 (1981.2)	36.00 (914.4)	24.00 (609.6)	(8) Provisions per phase	(8) Provisions per phase	**GTB25P5P5**

Notes

① Line side factory installed 3/8-inch bolt provisions for single-hole compression lugs (lugs furnished by others).
② Load side factory installed Burndy, two-hole, short barrel compression lugs suitable for copper wire only.
③ Requires 45-inch (1143.0 mm) wide enclosure.
④ Line and load side factory installed 3/8-inch bolt provisions for single-hole compression lugs (lugs furnished by others).

Approximate Dimensions in Inches (mm)

Roll-Up Generator Termination Box with Line Single-Hole Compression Lug Provisions; Load Provisions Only, Two-Hole Compression Lugs ①②③

Ampere Rating	Dimensions Height	Width	Depth	Single-Hole Compression Line Provisions Only Number and Range	Two-Hole Compression Load Provisions Only Number and Range	Catalog Number
800	78.00 (1981.2)	45.00 (1143.0)	24.00 (609.6)	(3) Provisions per phase	(3) Provisions per phase	**GTB08P1PA**
1200	78.00 (1981.2)	45.00 (1143.0)	24.00 (609.6)	(4) Provisions per phase	(4) Provisions per phase	**GTB12P2PB**
1600	78.00 (1981.2)	45.00 (1143.0)	24.00 (609.6)	(5) Provisions per phase	(5) Provisions per phase	**GTB16P3PC**
2000	78.00 (1981.2)	45.00 (1143.0)	24.00 (609.6)	(6) Provisions per phase	(6) Provisions per phase	**GTB20P4PD**
2500	78.00 (1981.2)	45.00 (1143.0)	24.00 (609.6)	(8) Provisions per phase	(8) Provisions per phase	**GTB25P5PE**

Roll-Up Generator Termination Box with Line Single-Hole Compression Lug Provisions; Load Mechanical Box Lugs ②③④

Ampere Rating	Dimensions Height	Width	Depth	Two-Hole Compression Line Provisions Only Number and Range	Mechanical Box Lugs Load Termination Number, Range and Type	Catalog Number
800	78.00 (1981.2)	45.00 (1143.0)	24.00 (609.6)	(3) Provisions per phase	(3) 4/0–500 kcmil	**GTB08PAMA**
				(3) Provisions per phase	(2) 3/0–750 kcmil	**GTB08PAMB**
1200	78.00 (1981.2)	45.00 (1143.0)	24.00 (609.6)	(4) Provisions per phase	(4) 4/0–500 kcmil	**GTB12PBMC**
				(4) Provisions per phase	(3) 3/0–750 kcmil	**GTB12PBMD**
1600	78.00 (1981.2)	45.00 (1143.0)	24.00 (609.6)	(5) Provisions per phase	(5) 4/0–500 kcmil	**GTB16PCME**
				(5) Provisions per phase	(4) 3/0–750 kcmil	**GTB16PCMF**
2000	78.00 (1981.2)	45.00 (1143.0)	24.00 (609.6)	(6) Provisions per phase	(6) 4/0–500 kcmil	**GTB20PDMG**
				(6) Provisions per phase	(5) 3/0–750 kcmil	**GTB20PDMH**
2500	78.00 (1981.2)	45.00 (1143.0)	24.00 (609.6)	(8) Provisions per phase	(8) 4/0–500 kcmil	**GTB25PEMJ**
				(8) Provisions per phase	(7) 3/0–750 kcmil	**GTB25PEMK**

Roll-Up Generator Termination Box with Line Two-Hole Compression Lug Provisions; Load Single-Hole Compression Lugs ②③⑤

Ampere Rating	Dimensions Height	Width	Depth	Two-Hole Compression Line Provisions Only Number and Range	Single-Hole Compression Load Termination Number, Range and Type	Catalog Number
800	78.00 (1981.2)	45.00 (1143.0)	24.00 (609.6)	(3) Provisions per phase	(3) 4/0–500 kcmil Al/Cu	**GTB08PACA**
				(3) Provisions per phase	(2) 3/0–750 kcmil Al/Cu	**GTB08PACB**
1200	78.00 (1981.2)	45.00 (1143.0)	24.00 (609.6)	(4) Provisions per phase	(4) 4/0–500 kcmil Al/Cu	**GTB12PBCC**
				(4) Provisions per phase	(3) 3/0–750 kcmil Al/Cu	**GTB12PBCD**
1600	78.00 (1981.2)	45.00 (1143.0)	24.00 (609.6)	(5) Provisions per phase	(5) 4/0–500 kcmil Al/Cu	**GTB16PCCE**
				(5) Provisions per phase	(4) 3/0–750 kcmil Al/Cu	**GTB16PCCF**
2000	78.00 (1981.2)	45.00 (1143.0)	24.00 (609.6)	(6) Provisions per phase	(6) 4/0–500 kcmil Al/Cu	**GTB20PDCG**
				(6) Provisions per phase	(5) 3/0–750 kcmil Al/Cu	**GTB20PDCH**
2500	78.00 (1981.2)	45.00 (1143.0)	24.00 (609.6)	(8) Provisions per phase	(8) 4/0–500 kcmil Al/Cu	**GTB25PECJ**
				(8) Provisions per phase	(7) 3/0–750 kcmil Al/Cu	**GTB25PECK**

Notes

① Line side factory installed 3/8-inch bolt provisions for single-hole compression lugs (lugs furnished by others).
② Load side factory installed 1/2-inch bolt provisions on 1-3/4-inch hole centers for two-hole compression lugs (lugs furnished by others).
③ Requires 45-inch (1143.0 mm) wide enclosure.
④ Load side mechanical lugs are factory selected and installed.
⑤ Load side Anderson, single-hole compression lugs are factory selected and installed.

Approximate Dimensions in Inches (mm)

Roll-Up Generator Termination Box with Line TWo-Hole Compression Lug Provisions; Load Two-Hole Compression Lugs ①②③

Ampere Rating	Dimensions Height	Width	Depth	Two-Hole Compression Line Provisions Only Number and Range	Two-Hole Compression Load Termination Cu Only Wire Size	Catalog Number
800	78.00 (1981.2)	45.00 (1143.0)	24.00 (609.6)	(3) Provisions per phase	(3) 350 kcmil Cu only	**GTB08PACL**
				(3) Provisions per phase	(3) 400 kcmil Cu only	**GTB08PACM**
1200	78.00 (1981.2)	45.00 (1143.0)	24.00 (609.6)	(4) Provisions per phase	(4) 500 kcmil Cu only	**GTB12PBCN**
				(4) Provisions per phase	(3) 600 kcmil Cu only	**GTB12PBCP**
				(4) Provisions per phase	(3) 750 kcmil Cu only	**GTB12PBCQ**
1600	78.00 (1981.2)	45.00 (1143.0)	24.00 (609.6)	(5) Provisions per phase	(5) 500 kcmil Cu only	**GTB16PCCR**
				(5) Provisions per phase	(4) 600 kcmil Cu only	**GTB16PCCS**
				(5) Provisions per phase	(4) 750 kcmil Cu only	**GTB16PCCT**
2000	78.00 (1981.2)	45.00 (1143.0)	24.00 (609.6)	(6) Provisions per phase	(6) 500 kcmil Cu only	**GTB20PDCU**
				(6) Provisions per phase	(5) 600 kcmil Cu only	**GTB20PDCU**
				(6) Provisions per phase	(5) 750 kcmil Cu only	**GTB20PDCW**
2500	78.00 (1981.2)	45.00 (1143.0)	24.00 (609.6)	(8) Provisions per phase	(7) 500 kcmil Cu only	**GTB25PECX**
				(8) Provisions per phase	(6) 600 kcmil Cu only	**GTB25PECY**
				(8) Provisions per phase	(6) 750 kcmil Cu only	**GTB25PECZ**

Roll-Up Generator Termination Box with Line Two-Hole Compression Lug Provisions; Load Single-Hole Compression Lugs ①③④

Ampere Rating	Dimensions Height	Width	Depth	Two-Hole Compression Line Provisions Only Number and Range	Single-Hole Compression Load Provisions Only Number and Range	Catalog Number
800	78.00 (1981.2)	45.00 (1143.0)	24.00 (609.6)	(3) Provisions per phase	(3) Provisions per phase	**GTB08PAP1**
1200	78.00 (1981.2)	45.00 (1143.0)	24.00 (609.6)	(4) Provisions per phase	(4) Provisions per phase	**GTB12PBP2**
1600	78.00 (1981.2)	45.00 (1143.0)	24.00 (609.6)	(5) Provisions per phase	(5) Provisions per phase	**GTB16PCP3**
2000	78.00 (1981.2)	45.00 (1143.0)	24.00 (609.6)	(6) Provisions per phase	(6) Provisions per phase	**GTB20PDP4**
2500	78.00 (1981.2)	45.00 (1143.0)	24.00 (609.6)	(8) Provisions per phase	(8) Provisions per phase	**GTB25PEP5**

Roll-Up Generator Termination Box with Line Two-Hole Compression Lug Provisions; Load Two-Hole Compression Lugs Provisions ③⑤

Ampere Rating	Dimensions Height	Width	Depth	Two-Hole Compression Line Provisions Only Number and Range	Two-Hole Compression Load Provisions Only Number and Range	Catalog Number
800	78.00 (1981.2)	45.00 (1143.0)	24.00 (609.6)	(3) Provisions per phase	(3) Provisions per phase	**GTB08PAPA**
1200	78.00 (1981.2)	45.00 (1143.0)	24.00 (609.6)	(4) Provisions per phase	(4) Provisions per phase	**GTB12PBPB**
1600	78.00 (1981.2)	45.00 (1143.0)	24.00 (609.6)	(5) Provisions per phase	(5) Provisions per phase	**GTB16PCPC**
2000	78.00 (1981.2)	45.00 (1143.0)	24.00 (609.6)	(6) Provisions per phase	(6) Provisions per phase	**GTB20PDPD**
2500	78.00 (1981.2)	45.00 (1143.0)	24.00 (609.6)	(8) Provisions per phase	(8) Provisions per phase	**GTB25PEPE**

Notes

① Line side factory installed 1/2-inch bolt provisions on 1-3/4-inch hole centers for two-hole compression lugs (lugs furnished by others).
② Load side factory installed Burndy, two-hole, short barrel compression lugs suitable for copper wire only.
③ Requires 45-inch (1143.0 mm) wide enclosure.
④ Load side factory installed 3/8-inch bolt provisions for 1-hole compression lugs (lugs furnished by others).
⑤ Line and load side factory installed 1/2-inch bolt provisions on 1-3/4-inch hole centers for two-hole compression lugs (lugs furnished by others).

Dimensions

Approximate Dimensions in Inches (mm)

Enclosure

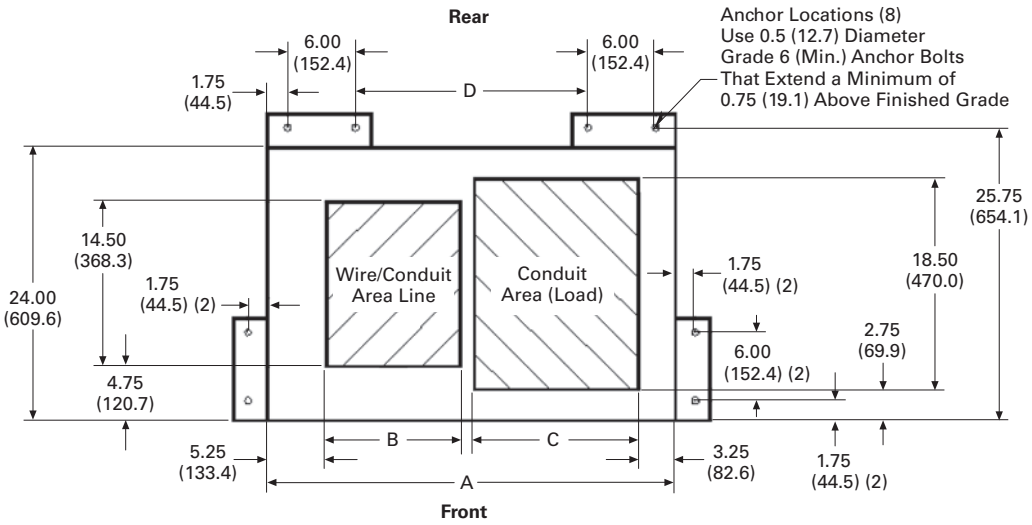

Termination/Lug Landing

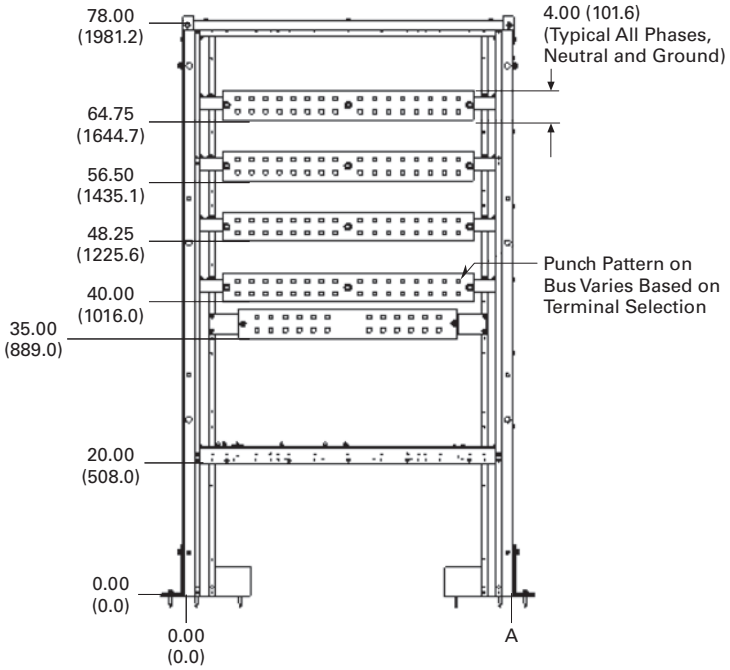

Enclosure Dimensions ①

Structure Width	A	B	C	D
36.00 (914.4)	28.00 (711.2)	11.75 (298.5)	14.50 (368.3)	20.50 (520.7)
45.00 (1143.0)	45.00 (1143.0)	18.25 (463.6)	18.00 (457.2)	28.50 (723.9)

Termination/Lug Landing Dimensions

Structure Width	A
36.00 (914.4)	36.00 (914.4)
45.00 (1143.0)	45.00 (1143.0)

Note

① Conduit landing surface will be 20.00 (508.0) above finished grade.

Pow-R-Line Multipoint Meter / PRC7500

Contents

Description	*Page*
Multipoint Meter (MPM)	
Overview	**V2-T4-36**
Pow-R-Line Multipoint Meter	**V2-T4-37**
PRC7500—Tenant Metering	**V2-T4-38**

Overview

Allocation of energy consumption in a residential or commercial application is a tremendous task for a property owner, management firm or electrical energy manager. To assist in allocation or direct billing of consumed energy, use Eaton's Pow-R-Line Multipoint Meter or Pow-R-Command™ 7500 (PRC7500) low cost solutions. The Pow-R-Line Multipoint Meter / PRC7500 provides a cost-effective energy tabulation system for residential or commercial metering installations. These installations can include:

- High-rise buildings
- Universities and campuses
- Office buildings
- Apartment and condominium complexes
- Shopping malls
- Airports
- System commissioning is required and priced separately

When there is a need for accurate information of consumed energy for monthly invoicing statements, use Eaton's Multipoint Meter solution. Using the Multipoint Meter for utility allocation maximizes revenue by effectively measuring, allocating and recovering utility expenditures. The Multipoint Meter solution can interface with a third-party utility allocation service and offers the following advantages:

- Purchase energy at bulk rates while charging consumer rates
- Capitalize on naturally variable tenant loads by purchasing energy at a lower coinciding load
- Capture and allocate common area maintenance cost
- Promote tenant retention with accurate and defensible billing
- Eliminate subsidization of other tenants

Application Description

Refer to Eaton's *Consulting Application Guide*. For complete application and pricing information, contact your local Eaton sales office.

Features and Benefits

- Factory-wired system
- Saves floor space
- Lower installed cost
- Network compatible
- Tenant sub-billing

Standards and Certifications

- UL listed

Listed

Pow-R-Line Multipoint Meter

Contents

Description	*Page*
Overview	**V2-T4-36**
Pow-R-Line Multipoint Meter PRC7500—Tenant Metering	**V2-T4-38**

Pow-R-Line Multipoint Meter

Product Description

Using Eaton's Pow-R-Line Multipoint Meter design, multiple tenant submetering has never been easier. The Pow-R-Line Multipoint Meter combines the Power Xpert® Multi-Point Meter and Eaton's PRL4, PRLC or Integrated Facility System™ (IFS™) to provide a space-saving, cost-effective energy tabulation system for residential or commercial metering installations.

Application Description

With energy cost on the rise, it is vital to proactively monitor and conserve electrical energy. Documentations of electrical energy usage can promote energy conservation for tenants or business departments. When the need for accurate energy consumption information for monthly tenant invoicing arises, use Eaton's Pow-R-Line Multipoint Meter solution.

Using the Multipoint Meter for utility allocation maximizes revenue by effectively measuring, allocating and recovering utility expenditures. The Pow-R-Line Multipoint Meter, using Eaton's cost-allocation software or a third-party billing software, can generate single-rate or multi-rate billing.

Features, Benefits and Functions

The Pow-R-Line Multipoint Meter offers the property owner or the property management firm the ability to:

- Capture and allocate common area maintenance cost
- Promote tenant retention with accurate billing
- Eliminate subsidization of other tenants

The Pow-R-Line Multipoint Meter space-saving design reduces the need for multi-metering equipment for each tenant. Additionally, the Pow-R-Line Multipoint Meter can monitor loads up to 5000A for energy billing or cost allocation. The meter is rated per ANSI C12.20 for revenue metering grade accuracy. With built-in communications capabilities, the Pow-R-Line Multipoint Meter can be connected to a local PC or network. The Pow-R-Line Multipoint Meter can connect to a third-party billing service to provide monthly energy consumption charges used by tenants. Additionally, unit status and communication activity are provided by a display on the metering compartment front panel.

The Pow-R-Line Multipoint Meter device can measure up to 60 total poles in any combination of single-, two- or three-pole breakers. The meters and current sensors are factory mounted with the current sensors factory wired to the meter inside the host structure. The meter monitors power and energy including instantaneous (kW), demand and cumulative (kWh) measurements for each load. The meter provides the following:

- Interval energy data logging
- Time-of-use energy registers
- Coincident peak demand storage
- Schedule remote meter reading data in non-volatile memory
- Measure bus voltage

Options

- Energy Portal Module or Ethernet-based communications plus Modbus® TCP and BACnet/IP
- Pulse input module for WAGES inputs
- Digital output module for programmable alarm functions

PRC7500—Tenant Submetering

Contents

Description	*Page*
Overview	**V2-T4-36**
Pow-R-Line Multipoint Meter	**V2-T4-37**
PRC7500—Tenant Metering Layout Guide	**V2-T4-39**

PRC7500—Tenant Metering

Product Description

Leading property management companies around the world are realizing the time and cost savings of tenant metering in residential, commercial and industrial applications.

Allocating energy consumption can be a tremendous task for any property owner, management firm or electrical energy manager. Eaton's PRC7500 is a solution that combines Eaton's IFS switchboards with Quadlogic® electrical meters and current transformers for a cost-effective energy tracking system perfect for many applications.

Application Description

Imagine the success of tenant metering in these installations:

- Apartments, town homes, condominium complexes
- Shopping malls
- High-rise office buildings
- Universities and campuses
- Airports

... and more!

Features, Benefits and Functions

Eaton's reliable IFS is integrated with Quadlogic's Power Line Communications technology, that transmits meter data over a building's existing power lines. That means:

- Factory-assembled—saves time
- No additional wiring
- No meter readers required

This system proves to provide reliable and accurate data needed to bill tenants, allocate energy costs and make smart energy decisions.

In addition, PRC7500 Tenant Metering also affords the following benefits:

- Energy costs allocated to individual tenants or departments within the building
- Allocate common area electric charges
- Create revenue by purchasing bulk rate energy
- Retain happy tenants with fair and accurate allocation of energy costs
- Commercial, residential or industrial applications
- Meters up to 12 (two-pole) tenants or eight (three-pole) tenants per meter
- Reliable power line communications
- Interval data and time-of-use capability
- Event profiling (power down, demand resets, tampers, etc.)
- Load profiling
- Collects data from water and gas meters
- Easy to install
- Proven accuracy—ANSI compliant
- Cost-effective—saves on equipment cost and installation

- Integrated Pow-R-Line Communications—uses existing electrical wiring for communications; requires no dedicated hard wires, additional modules or attachments for communications
- Flexible data programming—interval data down to 5 minutes allows for flexible load profiling and time-of-use billing options
- Accurate—meets ANSI C12.1 specifications and stringent requirements of Measurement Canada (AE-1148)
- Comprehensive information—event reporting with date and time stamps regarding power consumption, demand reset, power-ups and power-downs, time changes and tampers
- Liquid crystal display LCD—provides consumption readings for each tenant
- Multi-utility submetering system—integrates and stores pulse data from gas and water meters
- Power quality data—measures four-quadrant energy to analyze power quality
- Data integrity—uses flash memory for accurate storage and integrity without battery reliance
- Installation verification display—allows on-site verification of proper installation

Layout Guide

Refer to Eaton's *Consulting Application Guide*.

The MiniCloset-5 has a display incorporated into the meter. A shorting terminal block is provided to connect between the MiniCloset-5 and the current transformers. An optional component for collecting data from the MiniCloset-5 meters is the Scan Transponder-5 (mounted separately)—13.50 H x 8.50 W x 4.50 D in inches (342.9 H x 215.9 W x 114.3 D in mm).

Transfer Switches

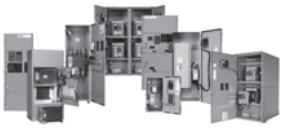

5.1 Transfer Switch Equipment

Product Selection Guide V2-T5-2
Product Description V2-T5-5
Application Description V2-T5-5

5.2 Contactor-Based Designs

Automatic Open Transition, 40–1600 A V2-T5-8
Automatic Closed Transition, 40–1200 A V2-T5-13
Bypass Isolation Transfer Switches, 40–1600 A, Dual Drawout V2-T5-17
Bypass Isolation Transfer Switches, 40–1200 A, Fixed Bypass V2-T5-22
Service Entrance Rated Automatic Open Transition, 40–1600 A V2-T5-27

5.3 Breaker-Based Designs

Molded Case Switches—Manual Wallmount, 30–1000 A V2-T5-35
Molded Case Switches—Non-Automatic Wallmount, 30–1000 A V2-T5-39
Molded Case Switches—Automatic Wallmount, 30–1000 A V2-T5-42
Maintenance Bypass Switches—Type MBHE 100–1000 A V2-T5-48

5.4 Magnum-Based Designs

Power Case Switch—Floorstanding, 200–5000 A V2-T5-51
Bypass Isolation Transfer Switch, 200–5000 A V2-T5-60

5.5 Automatic Transfer Controllers

Product Selection Guide V2-T5-66
ATC-100 Controller V2-T5-70
ATC-300+ Controller V2-T5-72
ATC-900 Controller V2-T5-76
Controller Replacement Guide V2-T5-87

5.6 Standard and Optional Features

Standard and Optional Features V2-T5-93

5.7 Remote Annunciator Controller

Product Description V2-T5-118
Features V2-T5-118
Dimensions V2-T5-120
Wiring Diagram V2-T5-120

5.8 kW Conversions

kW Conversion Chart V2-T5-121

Automatic Transfer Switches

Contents

Description	*Page*
Product Description	**V2-T5-5**
Application Description	**V2-T5-5**

Learn Online

Product Selection Guide

Transfer Switch Product

Catalog Numbering System	**Automatic Contactor (600 Vac) (40–1200 A) (480 Vac) (40–1600 A)**			**Bypass Isolation Contactor (600 Vac) (40–1200 A) (480 Vac) (40–1600 A)**		**Service Entrance Rated Contactor (480 Vac) (40–1600 A)**		
Type	AT = Automatic CT = Closed transition NT = Non-Automatic Refer to **Page V2-T5-8**			BI = Bypass isolation open transition CB = Bypass isolation closed transition Refer to **Page V2-T5-17**		AT = Automatic Refer to **Page V2-T5-27**		
Orientation	V = Vertical			V = Vertical		V = Vertical		
Logic	1 = ATC-100 (up to 400 A only) 3 = ATC-300+ 9 = ATC-900			3 = ATC-300+ 9 = ATC-900		3 = ATC-300+ 9 = ATC-900		
Frame	C = Contactor-based 2 = Two-position open in-phase transition 3 = Three-position delayed transition 5 = Open in-phase with default to delayed transition			C = Contactor-based 3 = Three-position delayed transition 5 = Open in-phase with default to delayed transition		C = Contactor-based 2 = Two-position open in-phase transition 3 = Three-position delayed transition 5 = Open in-phase with default to delayed transition		
Switch	X = Fixed mount			E = Drawout bypass X = Fixed mount bypass		X = Fixed mount		
Poles	2 = Two-pole 3 = Three-pole 4 = Four-pole			2 = Two-pole 3 = Three-pole 4 = Four-pole		2 = Two-pole 3 = Three-pole 4 = Four-pole		
Amperes	0040 = 40 A 0080 = 80 A 0100 = 100 A 0150 = 150 A 0200 = 200 A	0225 = 225 A 0260 = 260 A 0400 = 400 A 0600 = 600 A 0800 = 800 A	1000 = 1000 A 1200 = 1200 A 1600 = 1600 A ①	0100 = 100 A 0150 = 150 A 0200 = 200 A 0260 = 260 A 0400 = 400 A	0600 = 600 A 0800 = 800 A 1000 = 1000 A 1200 = 1200 A 1600 = 1600 A ②	0040 = 40 A 0080 = 80 A 0100 = 100 A 0150 = 150 A 0200 = 200 A	0225 = 225 A 0260 = 260 A 0400 = 400 A 0600 = 600 A 0800 = 800 A	1000 = 1000 A 1200 = 1200 A 1600 = 1600 A
Voltage	B = 208 V, 60 Hz E = 600 V, 60 Hz	G = 220 V, 50/60 Hz X = 480 V, 60 Hz H = 380/220, 50/60 Hz W = 240 V, 60 Hz		B = 208 V, 60 Hz E = 600 V, 60 Hz	G = 220 V, 50/60 Hz X = 480 V, 60 Hz H = 380/220, 50/60 Hz W = 240 V, 60 Hz	B = 208 V, 60 Hz W = 240 V, 60 Hz X = 480 V, 60 Hz		
Enclosure	K = Open S = NEMA 1 R = NEMA 3R	D = NEMA 4X J = NEMA 12		S = NEMA 1 R = NEMA 3R D = NEMA 4X		S = NEMA 1 R = NEMA 3R		
Listing	U = UL listed R = UL recognized X = No listing			U = UL listed R = UL recognized X = No listing		U = UL listed		

Notes

① Up to 480 volts.

② 1600 A is dual drawout only.

Key: DO = Drawout
FM = Fixed mounted
MCB = Molded case breaker
MCS = Molded case switch

Transfer Switch Product Guide, continued

Catalog Numbering System	Manual Molded Case Switch (600 Vac) (30–1000 A)		Non-Automatic Molded Case Switch (600 Vac) (30–1000 A)	Automatic (Wallmount) Molded Case Switch (600 Vac) (30–1000 A)	Maintenance Bypass (480 Vac) (100–1000 A)
Type	MT = Manual Refer to **Page V2-T5-35**		NT = Non-automatic Refer to **Page V2-T5-39**	AT = Automatic Refer to **Page V2-T5-42**	MB = Maintenance bypass Refer to **Page V2-T5-48**
Orientation	H = Horizontal V = Vertical		H = Horizontal V = Vertical	H = Horizontal V = Vertical	H = Horizontal
Logic	X = No Logic		E = Electromechanical	1 = ATC-100 3 = ATC-300+ 9 = ATC-900	E = Electromechanical
Frame	Molded case device FD = 30–150 A KD = 150–300 A LD = 400–600 A	MD = 600–800 A NB = 800–1000 A	Molded case device FD = 30–150 A KD = 150–300 A LD = 400–600 A MD = 600–800 A NB = 800–1000 A	Molded case device FD = 30–200 A KD = 150–300 A LD = 400–600 A MD = 600–800 A NB = 800–1000 A (FD = 200 A available on ATH3 only)	Molded case device FD = 100–150 A KD = 150–300 A LD = 400–600 A MD = 600–800 A NB = 800 –1000 A
Switch	Fixed mount A = FM, N (MCS), E (MCS) B = FM, N (MCB), E (MCB)	C = FM, N (MCB), E (MCS) D = FM, N (MCS), E (MCB)	Fixed mount A = FM, N (MCS), E (MCS) B = FM, N (MCB), E (MCB) C = FM, N (MCB), E (MCS) D = FM, N (MCS), E (MCB)	Fixed mount A = FM, N (MCS), E (MCS) B = FM, N (MCB), E (MCB) C = FM, N (MCB), E (MCS) D = FM, N (MCS), E (MCB)	Fixed mount A = FM, N (MCS), E (MCS)
Poles	2 = Two-pole 3 = Three-pole 4 = Four-pole		2 = Two-pole 3 = Three-pole 4 = Four-pole	2 = Two-pole 3 = Three-pole 4 = Four-pole	2 = Two-pole 3 = Three-pole 4 = Four-pole
Amperes	0030 = 30 A 0070 = 70 A 0100 = 100 A 0150 = 150 A 0225 = 225 A	0300 = 300 A 0400 = 400 A 0600 = 600 A 0800 = 800 A 1000 = 1000 A	0030 = 30 A 0070 = 70 A 0100 = 100 A 0150 = 150 A 0225 = 225 A 0300 = 300 A 0400 = 400 A 0600 = 600 A 0800 = 800 A 1000 = 1000 A	0030 = 30 A 0070 = 70 A 0100 = 100 A 0150 = 150 A 0200 = 200 A 0225 = 225 A 0300 = 300 A 0400 = 400 A 0600 = 600 A 0800 = 800 A 1000 = 1000 A	0100 = 100 A 0150 = 150 A 0225 = 225 A 0300 = 300 A 0400 = 400 A 0600 = 600 A 0800 = 800 A 1000 = 1000 A
Voltage	E = 600 V, 60 Hz		B = 208 V, 60 Hz E = 600 V, 60 Hz G = 220 V, 50/60 Hz H = 380 V, 50 Hz K = 600 V, 50 Hz O = 415 V, 50 Hz W = 240 V, 60 Hz X = 480 V, 60 Hz	B = 208 V, 60 Hz E = 600 V, 60 Hz G = 220 V, 50/60 Hz H = 380 V, 50 Hz K = 600 V, 50 Hz O = 415 V, 50 Hz W = 240 V, 60 Hz X = 480 V, 60 Hz	B = 208/120 V W = 240 V W = 240/120 V X = 480 V X = 480/277V
Enclosure	K = Open S = NEMA 1 J = NEMA 12	R = NEMA 3R D = NEMA 4X	K = Open S = NEMA 1 R = NEMA 3R J = NEMA 12 D = NEMA 4X	K = Open S = NEMA 1 J = NEMA 12 R = NEMA 3R D = NEMA 4X	K = Open S = NEMA 1 J = NEMA 12 R = NEMA 3R D = NEMA 4X
Listing	U = UL listed R = UL recognized X = No listing		U = UL listed R = UL recognized X = No listing	U = UL listed R = UL recognized X = No listing	U = UL listed R = UL recognized X = No listing

Key: DO = Drawout
FM = Fixed mounted
MCB = Molded case breaker
MCS = Molded case switch

Transfer Switch Product Guide, continued

Catalog Numbering System	Automatic (Free Standing) (600 Vac) (200–5000 A)		Bypass Isolation and Closed Transition Bypass Isolation (<100 ms) (600 Vac) (200–5000 A)
Type	AT = Automatic CT = Closed transition Refer to **Page V2-T5-51**		BI = Open transition bypass isolation CB = Closed transition bypass isolation Refer to **Page V2-T5-60**
Orientation	V = Vertical		V = Vertical
Logic	9 = ATC-900		9 = ATC-900
Frame	Power case device (Magnum®) MG = 600–5000 A		Power case device (Magnum) MG = 600–5000 A
Switch	Fixed mount A = FM,N (MPS), E (MPS) B = FM, N (MPB), E (MPB) C = FM, N (MPB), E (MPS) D = FM, N (MPS), E (MPB)	Drawout mount E = DO, N (MPS), E (MPS) F = DO, N (MPB), E (MPB) G = DO, N (MPB), E (MPS) H = DO, N (MPS), E (MPB)	Drawout mount E = DO, N (MPS), E (MPS) F = DO, N (MPB), E (MPB) G = DO, N (MPB), E (MPS) H = DO, N (MPS), E (MPB)
Poles	2 = Two-pole 3 = Three-pole 4 = Four-pole		2 = Two-pole 3 = Three-pole 4 = Four-pole
Amperes	0200 = 200 A 0300 = 300 A 0400 = 400 A 0600 = 600 A 0800 = 800 A 1000 = 1000 A 1200 = 1200 A 1600 = 1600 A 2000 = 2000 A 2500 = 2500 A 3000 = 3000 A 3200 = 3200 A 4000 = 4000 A ① 5000 = 5000 A ①		0200 = 200 A 0300 = 300 A 0400 = 400 A 0600 = 600 A 0800 = 800 A 1000 = 1000 A 1200 = 1200 A 1600 = 1600 A 2000 = 2000 A 2500 = 2500 A 3200 = 3200 A 4000 = 4000 A 5000 = 5000 A
Voltage	E = 600 V, 60 Hz E = 600/347, 50 Hz X = 480/277, 60 Hz X = 480/240, 60 Hz X = 480, 60 Hz O = 415/240, 50 Hz H = 380/220, 50 Hz W = 240/120, 60 Hz W = 240, 60 Hz G = 220/127, 50 Hz G = 220, 50 Hz B = 208/120, 60 Hz		E = 600 V, 60 Hz E = 600/347, 50 Hz X = 480/277, 60 Hz X = 480/240, 60 Hz X = 480, 60 Hz O = 415/240, 50 Hz H = 380/220, 50 Hz W = 240/120, 60 Hz W = 240, 60 Hz G = 220/127, 50 Hz G = 220, 50 Hz B = 208/120, 60 Hz
Enclosure	K = Open (up to 3200 A fixed mount only) S = NEMA 1 R = NEMA 3R T = NEMA 1 (through the door)		S = NEMA 1 R = NEMA 3R (non-walk-in) T = NEMA 1 (through the door)
Listing	U = UL listed R = UL recognized X = No listing		U = UL 1008 listed X = No listing

Note

① Supplied as drawout design only.

Key: DO = Drawout
FM = Fixed mounted
MPB = Magnum power breaker
MPS = Magnum power switch

Product Description

Eaton's automatic transfer switches are reliable, rugged, versatile and compact assemblies for transferring essential loads and electrical distribution systems from one power source to another.

Transfer switches can be supplied in separate enclosures for stand-alone applications or can be supplied as an integral component in the following equipment (see table below).

Product Type

Description	Section Reference
Magnum DS Switchgear	**Vol. 3, Tab 4**
DSII Switchgear	**Vol. 3, Tab 4**
Pow-R-Line® Switchboards	**Vol. 2, Tab 4**
Motor Control Centers	**Vol. 3, Tab 3**
Panelboards	**Vol. 2, Tab 3**

Typical Applications

All Eaton transfer switches are designed to meet the requirements set forth by UL 1008; however, all transfer switches are not created equal. You can be assured of safe and reliable operation from all types of transfer switches that Eaton offers.

Basic Components

The three basic components of a transfer switch are:

- Power switching device to shift the load circuits to and from the power source
- Transfer logic controller to monitor the condition of the power sources and provide the control signals to the power switching device
- Control power source to supply operational power to the controller and switching device

Application Description

A transfer switch is a critical component of any emergency or standby power system. When the normal (preferred) source of power is lost, a transfer switch quickly and safely shifts the load circuit from the normal source of power to the emergency (alternate) source of power. This permits critical loads to continue running with minimal or no outage. After the normal source of power has been restored, the retransfer process returns the load circuit to the normal power source.

Transfer switches are available with different operational modes including:

- Manual
- Non-automatic
- Automatic
- Bypass isolation
- Maintenance bypass

Switch Types

Manual transfer—This type of transfer is a non-automatic transfer switch manually initiated and manually operated. There is no motor operator or solenoid to initiate the transfer. The operator needs to open the enclosure door and operate the manual handle. Manual transfer is available only on a breaker-based design. Service entrance ratings are not available on manual transfer breaker-based designs.

Non-automatic transfer—This type of transfer is manually initiated, but electrically operated via the solenoid in a contactor-based design and the motor operator in a breaker-based design.

Automatic transfer—This type of transfer takes place automatically per the programmable settings in the ATS controller. The ATS controller senses source availability and when the programmed conditions are met, initiates a command to start the transfer including the generator start command (when transferring from a utility to a generator source). An automatic transfer switch can be configured to perform a utility-to-utility transfer or a generator-to-generator transfer (provided the ATS controller has this capability).

Bypass isolation transfer switch—This type of transfer switch includes an automatic transfer switch and also includes the bypass switch that allows the capability to transfer the load to the bypass switch without interrupting the power.

Maintenance bypass transfer switch—A maintenance bypass transfer switch is a non-automatic (manually initiated and electrically operated) initiated transfer switch used for specific applications for a UPS.

The power switching operation of transfer switches may be separated into the following transition modes:

Transition Types

Open transition—This is a "break-before-make" transfer. There is a definite break in power as the load is taken off one source and connected to the other source.

Open in-phase transition—This is a "break-before-make" transfer. There is a definite break in power as the load is taken off one source and connected to the other source. The ATS controller allows the transfer only when the phase difference between the two sources is near zero. The two position transfer switch is closed on Source 1 or closed on Source 2.

Open in-phase with default to time delay neutral—break-before-make operation using an in-phase monitor for source synchronization. If the in-phase does not initiate a transfer within a programmable time delay, then the transfer will default to a time delay neutral type of transfer.

Delayed transition—This is a "break-before-make" or open transition that also has a "center off" or neutral position with a programmable time delay setting for the neutral position. The three position transfer switch is either closed on Source 1, closed on Source 2, or in a center off, neutral position (not closed on either source).

Delayed transition with load voltage decay—This is a delayed transition with the optional feature to delay in the neutral position to point where the load voltage decays to a programmable voltage level. When the load voltage level reaches the programmable set point, the transfer from the neutral position initiates.

Closed transition—This is a "make-before-break" transfer. Both sources are connected to the load for less than 100ms before the break occurs. The two power sources have to be in synchronism and be good sources for the transfer to take place. These programmable settings for relative phase angle difference, frequency and voltage difference are made in the ATS controller.

Switch Position Types

The power switching device in an automatic transfer switch may be designed as either a two-position or a three-position operation. A two-position switching device can only be closed on Source 1 or closed on Source 2. There is no center off or neutral position. A three-position switching device can be closed on Source 1, closed on Source 2, or be in the center off or neutral position.

Transition Types

Transition	Contactor-Based			
	Two Position	Three Position	Breaker-Based	Magnum-Based
Open	Yes	Yes	Yes	Yes
Open in-phase	Yes	No	No	Yes
Open in-phase default TDN	No	Yes	No	Yes
Delayed time delay neutral	No	Yes	Yes	Yes
Delayed load voltage decay	No	Yes	Yes	Yes
Closed	Yes	Yes	No	Yes

Fully Rated Fourth Pole (Switched Neutral)

Eaton provides a fully rated switched neutral or fourth pole, meaning that the fourth pole has withstand, interrupt and closing ratings identical to the power contacts. The neutral pole is operated on a common shaft with the power contacts, thereby ensuring simultaneous opening and closing of the switched neutral. Eaton's fully rated fourth pole eliminates typical problems with a three-pole overlapping neutral:

- Eliminates nuisance ground trips at the main due to circulating zero sequence harmonic current between sources
- Reduction in ground current due to isolated single ground point lowers arc-flash levels and reduces generator damage
- Eliminates potential for faults to propagate across overlapping neutral; fully rated fourth pole will handle as a normal operation
- Does not generate voltages that exceed normal phase voltage

Note: For more detail, reference Eaton White Paper IA08700002E.

UL 1008 Endurance Testing

The importance of specifying a UL 1008 transfer switch can be seen in the table below. When specifying any UL 1008 transfer switch, you can be assured the switch has met and passed the following endurance testing.

UL 1008 Endurance Testing

ATS Rating (Amperes)	Rate of Operation Per Minute	With Current	Without Current	Total
0–300	1	6000	—	6000
301–400	1	4000	—	4000
401–800	1	2000	1000	3000
801–1600	0.5	1500	1500	3000
1601–4000	0.25	1000	2000	3000

UL 1008 Life Expectancy

Transfer switch applications typically require a plant exerciser once a week or once a month. The table below demonstrates the life expectancy operating the UL 1008 switch once a week for the life of the switch.

UL 1008 Life Expectancy

ATS Rating (Amperes)	Minimum Operations Per Year	Life Expectancy in Years With Current Applied	Life Expectancy in Years Without Current Applied
0–300	52	115	115
301–400	52	76	76
401–800	52	38	57
801–1600	52	28	57
1601–4000	52	19	57

Utility—Generator

Transfer switches are traditionally applied between a utility and a generator set for emergency and standby power systems.

Generator—Generator

Transfer switches are sometimes applied between two generator sets for prime power use, often in remote installations. In such applications, source power is periodically alternated between the generator sets to equally share run time.

Service Entrance Rated Transfer Switches

Modifying the molded case switch in the transfer switch by adding trip units and optional ground fault, along with adding the service entrance option eliminates the need for separate upstream disconnect devices and their respective power interconnections. This means the automatic transfer switch (ATS) is installed directly at the point of service entrance, saving valuable space and cost.

Eaton service entrance rated transfer switches have a 100% integrated rating. The ATS as well as the supplied breaker may be applied at 100% of the ATS rating, thus eliminating the need to consider any de-rating factors based upon the breaker rating.

The Eaton service entrance rated ATSs have been tested to and have successfully passed the stringent requirements of UL 1008 and carry the integrated UL 1008 rating. This rating ensures the end user that the ATS has passed the dielectric test, endurance test, overload test, withstand rating test and temperature rise requirements of UL 1008.

Built-In Protection

All Eaton molded case switches are "self protected," such that under extreme fault conditions, the switch will open before destroying itself. This feature allows Eaton to offer "Maintenance-Free Contacts" on the molded case transfer switch. The molded case switches have instantaneous magnetic trip units installed in each switch. These trips are not accessible once installed by the factory to eliminate field tapering. The trips are set to a minimum of 12 to 15 times the rated current of the molded case device, well above any coordination set points. This means they will not interfere with the normal operation of the distribution system and will only trip if something is very wrong.

Standard Application Utility—Generator

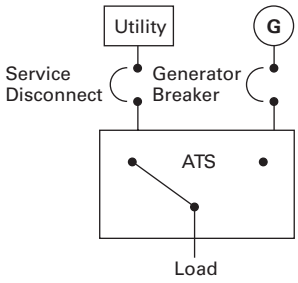

Standard Application Generator—Generator

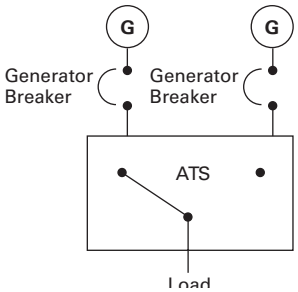

Service Entrance Rated Transfer Switches

Typical Transfer Switch Installation

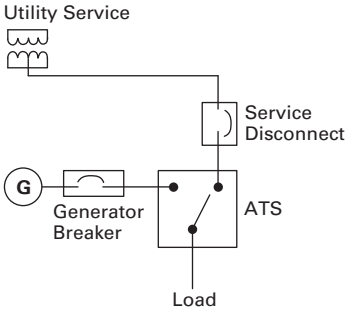

Transfer Switch Installation R
For Service Entrance

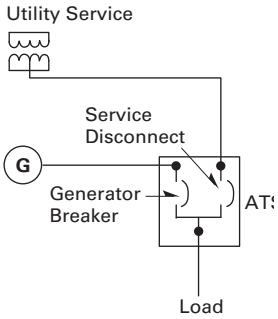

Built-In Protection

Example: 400 Ampere ATS With 500 Ampere T/M Breaker

400 FLA x 1.25 = 500 Ampere Breaker

Compare 400 Ampere ATS and 500 Ampere LD Breaker

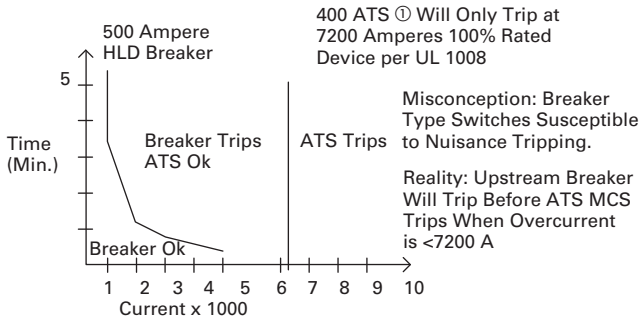

Note

① Magnetic Trip 12 x frame rating.

Contactor-Based ATS with ATC-300+ Controller

Contents

Description	*Page*
Automatic Open Transition, 40–1600 A	
Features, Benefits and Functions	**V2-T5-9**
Catalog Number Selection	**V2-T5-10**
Technical Data and Specifications	**V2-T5-10**
Dimensions	**V2-T5-11**
Automatic Closed Transition, 40–1200 A	**V2-T5-13**
Bypass Isolation Transfer Switches, 40–1600 A, Dual Drawout	**V2-T5-17**
Bypass Isolation Transfer Switches, 40–1200 A, Fixed Bypass	**V2-T5-22**
Service Entrance Rated Automatic Open Transition, 40–1600 A	**V2-T5-27**

Automatic Open Transition, 40–1600 A

Product Description

The automatic open transition contactor-based transfer switch is the most basic design that will provide a fully functioning automatic transfer switch.

The power switching operation of Eaton's contactor-based transfer switches may be separated into the following key categories of:

- Open in-phase transition—break-before-make operation utilizing an in-phase monitor for source synchronization
- Open delayed transition—break-before-make operation utilizing a programmable time delay (true neutral position)
- Open in-phase with default to time delay neutral—break-before-make operation utilizing an in-phase monitor for source synchronization. If the in-phase does not initiate a transfer within a programmable time delay, then the transfer will default to a time delay neutral type of transfer

The open in-phase transition utilizes a two-position mechanism and the open delayed transition utilizes a three-position mechanism. The mechanism used to operate the Eaton electrical contactor is a momentarily energized solenoid consisting of a stationary core and a moving core that is magnetically driven by an electrical coil.

The mechanism can be electrically and mechanically operated. The design is such that the mechanism is inherently interlocked so the device cannot be closed on the Source 1 and Source 2 at the same time under any circumstances. When switching from Source 1 to Source 2, or Source 2 to Source 1, the mechanism will only allow a break-before-make operation.

These contactor-based designs can be applied with the ATC-100 controller up to 400 A. The ATC-100 controller is recommended for residential or light commercial applications. Eaton recommends for emergency or legally required application that an ATC-300+ or ATC-900 controller be used. Applications requiring the ATC-300+ controller can be applied for applications 40–1600 A. Applications needing communication capability require the ATC-300+ with communication or the ATC-900 controller.

Application Description

An automatic open transition transfer switch may be used for those applications where emergency backup power is required, but a momentary loss of power is acceptable on the retransfer from emergency to normal.

Features, Benefits and Functions

Standard Features

- Auxiliary relay contacts:
  - Source 1 present 2NO and 2NC
  - Source 2 present 2NO and 2NC
- Switch position indication contacts:
  - Source 1 position 1NO and 1NC
  - Source 2 position 1NO and 1NC
- Source 1 and Source 2 sensing:
  - Undervoltage/ underfrequency
  - Overvoltage/ overfrequency
  - Three-phase rotation protection
  - Three-phase voltage unbalance
- Pretransfer signal contacts 1NO/1NC (with three-position mechanism)
- Go to emergency (Source 2)
- Seven field-programmable time delays
- LCD-based display for programming, system diagnostics and Help message display
- Mimic diagram with source available and connected LED indication
- Time-stamped history log
- System TEST pushbutton
- Programmable plant exerciser—OFF, daily, 7-, 14-, 28-day interval selectable run time 0–600 minutes no load/ load with fail-safe
- Modbus® RTU via RS-485

Optional Features

- Available surge suppression device for power/controller, engine start circuit, phone and cable connections
- Space heater with thermostat
- Eaton IQ and Power Xpert® series metering
- Stainless steel cover for controller
- Open in-phase transition, time delay neutral or in-phase with a default to time delay neutral transfer
- ATC-100 and ATC-900 controllers available
- Source 2 inhibit
- Manual retransfer to normal
- Remote annunciator with control
- Ethernet communication (PXG 400 Gateway)

Commercial Design Highlights

- UL 1008 front access
- High withstand and closing ratings
- Compact design

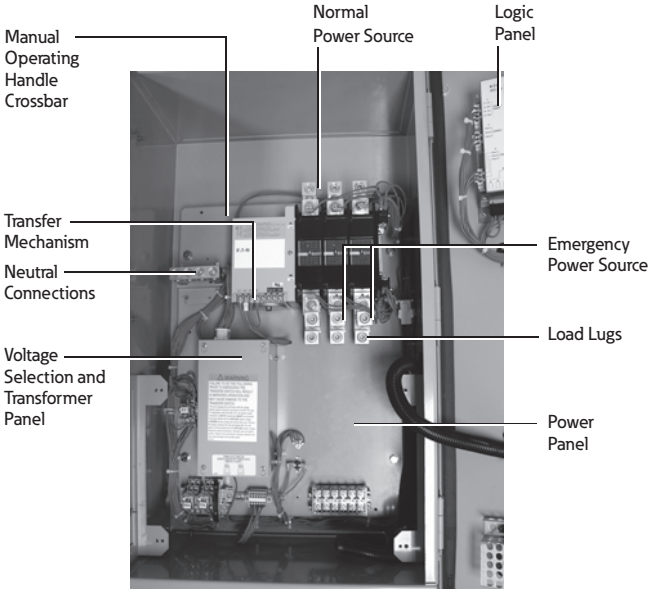

Typical Contactor-Based ATS 100–400 A

200 A ATS with ATC-300+ Controller

1600 ATS with ATC-300+ Controller

1200 A ATS with ATC-300+ Controller

Catalog Number Selection

Automatic Transfer Switch

AT C 3 C2 X 3 0400 X S U

Type
- **AT** = Automatic
- **NT** = Non-automatic

Orientation
- **C** = Contactor

Logic
- **1** = ATC-100 ①
- **3** = ATC-300+
- **9** = ATC-900
- **E** = Electromechanical

Mechanism
- **C2** = In-phase only
- **C3** = Time delay neutral (TDN) only
- **C5** = In-phase / TDN transfer

Switch
- **X** = Fix mount

Number of Poles
- **2** = Two-pole
- **3** = Three-pole
- **4** = Four-pole

Amperes
- **0040** = 40 A
- **0080** = 80 A
- **0100** = 100 A
- **0150** = 150 A
- **0200** = 200 A
- **0225** = 225 A
- **0260** = 260 A
- **0400** = 400 A
- **0600** = 600 A
- **0800** = 800 A
- **1000** = 1000 A
- **1200** = 1200 A
- **1600** = 1600 A ②

Voltage
- **A** = 120 V, 60 Hz
- **B** = 208 V, 60 Hz
- **E** = 600 V, 60 Hz
- **G** = 220 V, 50 Hz
- **H** = 380 V, 50 Hz
- **K** = 600 V, 50 Hz
- **M** = 230 V, 50 Hz
- **W** = 240 V, 60 Hz
- **X** = 480 V, 60 Hz
- **Z** = 365 V, 50 Hz

Enclosure
- **K** = Open
- **S** = NEMA 1
- **J** = NEMA 12
- **R** = NEMA 3R
- **D** = NEMA 4X

Certification
- **U** = UL listed

Technical Data and Specifications

UL 1008 Short-Circuit Withstand and Close-On Ratings (kA)

UL 1008 Ampere Rating	Mechanism	480 V 0.05 Seconds ③	480 V Specific Breaker	600 V 0.05 Seconds ③	600 V Specific Breaker	600 V Specific Fuse
40, 80, 100	C2	10,000	30,000	10,000	22,000	100,000 ④
150, 200	C2	10,000	30,000	22,000	35,000	100,000
225, 260, 400	C2	30,000	50,000	—	—	200,000
40, 80, 100, 150, 200	C3, C5	30,000	50,000	22,000	35,000	200,000
225, 260, 400	C3, C5	30,000	50,000	50,000	65,000	200,000
600, 800, 1000, 1200	C3, C5	50,000	65,000	50,000	65,000	200,000
1600	C3, C5	50,000	65,000	—	—	—

Notes

① For application up to 400 A only.
② Up to 480 V.
③ 0.025 seconds up through 200 A.
④ Specific fuse rating at 480 V only.

Dimensions

Approximate Dimensions in Inches (mm)

Contactor-Based Transfer Switch 40–1200 A—Dimensions and Approximate Shipping Weight

Ampere Rating	Enclosure	A (Height)	B (Width)	C (Depth)	Load Side, Normal and Standby Source	Neutral Connection	Weight in Lb (kg)
40–100 at 480 V ①	N1, N12, N3R	38.68 (982.5)	18.31 (465.1)	13.34 (338.8)	(1) #14–2/0	(3) #14–1/0	156 (71)
	N4X	37.50 (952.5)	17.50 (444.5)	14.34 (364.2)	(1) #14–2/0	(3) #14–1/0	156 (71)
40–100 at 600 V ①	N1, N12, N3R	38.68 (982.5)	18.31 (465.1)	13.34 (338.8)	(1) #14–2/0	(3) #14–1/0	164 (74)
	N4X	37.50 (952.5)	17.50 (444.5)	14.34 (364.2)	(1) #14–2/0	(3) #14–1/0	164 (74)
150–200 at 480 V ①	N1, N12, N3R	38.68 (982.5)	18.31 (465.1)	13.34 (338.8)	(1) #6–250 kcmil	(3) 1/0–250 kcmil	164 (74)
	N4X	37.50 (952.5)	17.50 (444.5)	14.34 (364.2)	(1) #6–250 kcmil	(3) 1/0–250 kcmil	164 (74)
150–200 at 600 V ①	N1, N12, N3R	52.00 (1321.0)	19.81 (503.2)	16.75 (425.5)	(1) #6–250 kcmil	(3) 1/0–250 kcmil	260 (118)
	N4X	52.00 (1321.0)	21.00 (533.4)	16.75 (425.5)	(1) #6–250 kcmil	(3) 1/0–250 kcmil	260 (118)
225–400 at 480 V ①	N1, N12, N3R	52.00 (1321.0)	19.81 (503.2)	16.75 (425.5)	(2) 3/0–250 kcmil (1) 3/0–600 kcmil	(6) 250–500 kcmil	260 (118)
	N4X	52.00 (1321.0)	21.00 (533.4)	16.75 (425.5)	(2) 3/0–250 kcmil (1) 3/0–600 kcmil	(6) 250–500 kcmil	260 (118)
225–1200 at 600 V ②	N1, N3R	79.41 (2017.0)	29.19 (741.4)	22.46 (570.5)	(4) 1/0–750 kcmil	(12) 1/0–750 kcmil	600 (272) three-pole 650 (295) four-pole
	N12, N4X	84.75 (2152.7)	29.00 (737.0) three-pole 29.00 (737.0) four-pole	24.26 (616.2)	(4) 1/0–750 kcmil	(12) 1/0–750 kcmil	700 (318) 750 (340)
600–1200 at 480 V ②	N1, N3R	79.41 (2017.0)	25.25 (641.4) three-pole 29.19 (741.4) four-pole	22.46 (570.5)	(4) 1/0–750 kcmil	(12) 1/0–750 kcmil	600 (272) three-pole 650 (295) four-pole
	N12, N4X	84.75 (2152.7)	29.00 (737.0) three-pole 29.00 (737.0) four-pole	24.26 (616.2)	(4) 1/0–750 kcmil	(12) 1/0–750 kcmil	700 (318) 750 (340)

Automatic, Non-Automatic Up to 400 A—Wallmount, N1 or N3R

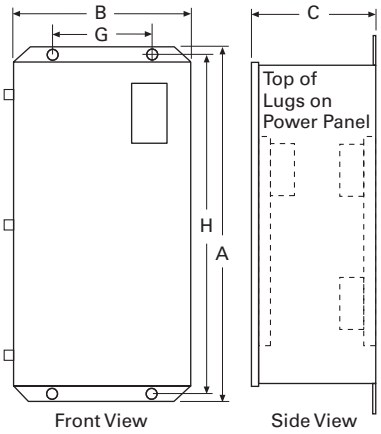

Notes

① Wallmount.

② Floorstanding and wall-secured—height dimension includes the bottom bracket.

Automatic, Non-Automatic 600–1200 A Outline, N1 or N3R

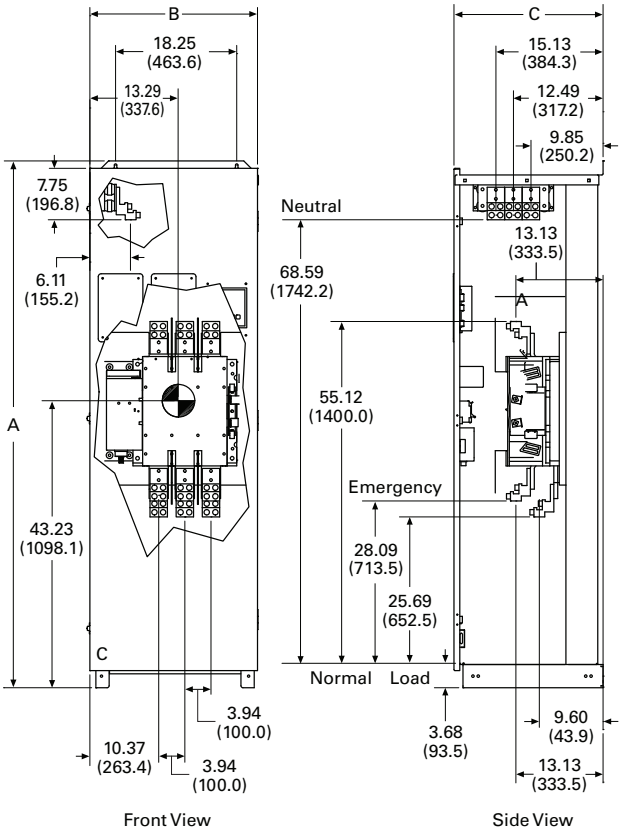

Approximate Dimensions in Inches (mm)

1600 A Transfer Switch

Ampere Rating	Enclosure	A (Height)	B (Width)	C (Depth)	Load Side, Normal and Standby Source	Neutral Connection	Weight in Lb (kg)
1600 A at 480 V ①	N1	90.00 (2286.0)	40.00 (1016.0)	28.73 (729.7)	(4) 1/0–750 kcmil	(12) 1/0–750 kcmil	730 (331) three-pole
	N3R	90.72 (2304.3)	40.35 (1024.9)	43.34 (1100.8)	(4) 1/0–750 kcmil	(12) 1/0–750 kcmil	780 (354) three-pole 830 (377) four-pole

Automatic, Non-Automatic Open Transition NEMA 1 Enclosure 1600 A

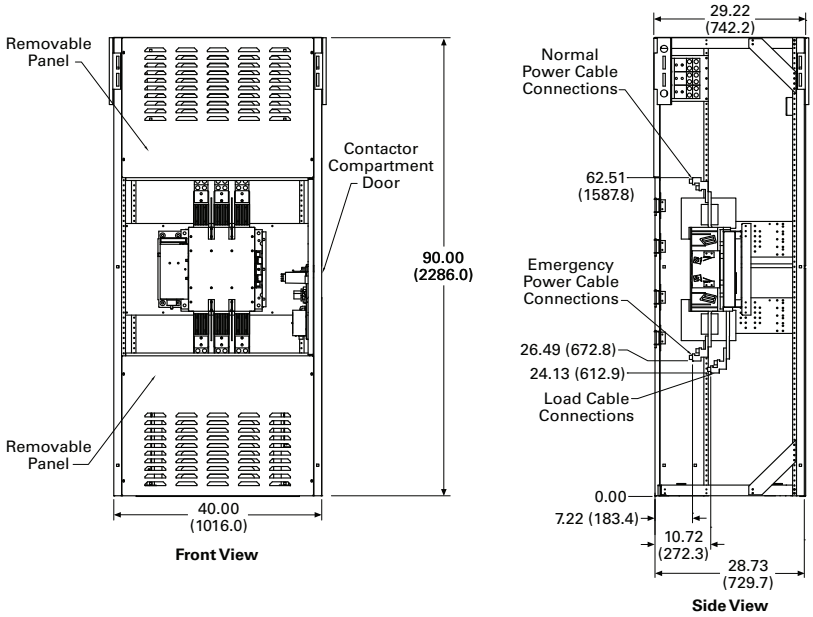

Automatic, Non-Automatic Open Transition NEMA 3R Enclosure 1600 A

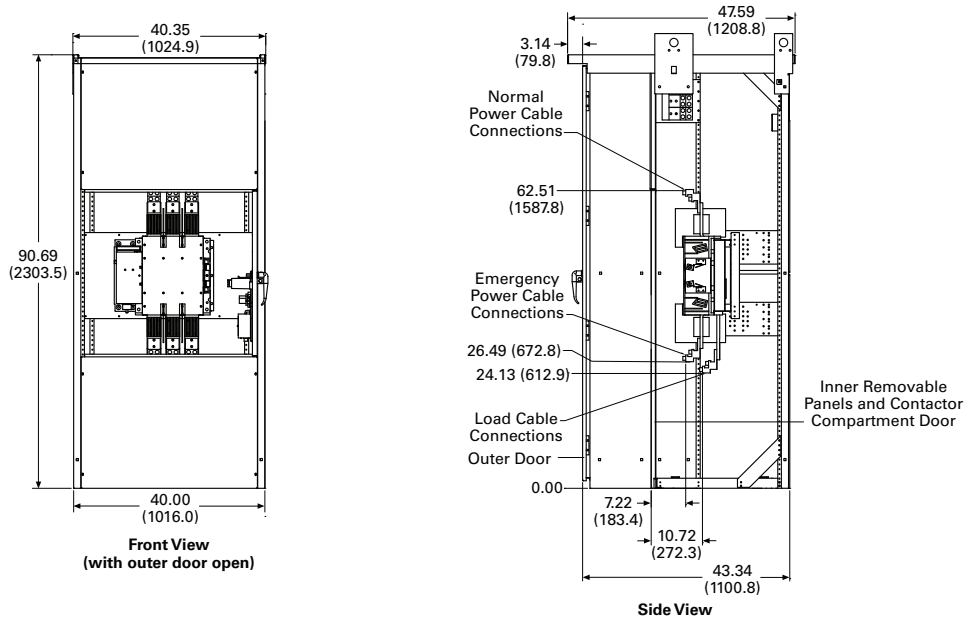

Note

① Freestanding.

Contactor-Based ATS with ATC-900 Controller

Contents

Description	*Page*
Automatic Open Transition, 40–1600 A	**V2-T5-8**
Automatic Closed Transition, 40–1200 A	
Features, Benefits and Functions	**V2-T5-14**
Catalog Number Selection	**V2-T5-15**
Technical Data and Specifications	**V2-T5-15**
Dimensions	**V2-T5-16**
Bypass Isolation Transfer Switches, 40–1600 A, Dual Drawout	**V2-T5-17**
Bypass Isolation Transfer Switches, 40–1200 A, Fixed Bypass	**V2-T5-22**
Service Entrance Rated Automatic Open Transition, 40–1600 A	**V2-T5-27**

Automatic Closed Transition, 40–1200 A

Product Description

Eaton's closed transition contactor-based automatic transfer switch is designed to avoid intentional interruption of power when both sources of power are available by momentarily paralleling both sources.

The controller is a comprehensive, multi-function, microprocessor-based controller, offering extensive monitoring, status reporting and transfer control operation.

The make-before-break contact sequence coupled with Eaton's ATC-900 provides a transfer switch that is useful in critical standby power applications available from 40–1200 A.

Application Description

A transfer switch designed for closed transition has make-before-break contacts that require the normal and alternate sources to be synchronized. The source contacts on Eaton's controller will parallel for 100 ms or less. The controller provides all-phase undervoltage, underfrequency, and overvoltage and overfrequency protection as a standard. Consult with the local utility company for permission and to verify the protection requirements as each utility may have different rules regarding closed transition applications. Protective relays may be available as an option upon request.

Closed transition controls

The switch accomplishes the closed transition transfer by monitoring the voltage and frequency set point conditions of both power sources. Once the set point conditions are met, the controller will start the closed transition synchronization timer (TSCT). The TSCT is adjustable from 1–60 minutes in duration. This duration is the time during which the controller will monitor the phase angles to anticipate when they will be within 8 electrical degrees. The closed transition scheme is anticipatory, allowing the close contacts signal to be initiated before the sources are exactly in phase. If the TSCT times out and the transfer switch has not reached synchronization, the transfer switch will remain connected to the current power source and a failure to transfer alarm will be displayed.

The transfer switch can also be equipped with an optional open transition transfer method for situations where synchronization is not possible, but a transfer is required. One of the following transition features can be selected:

- Closed transition only
- Closed transition with default to load voltage decay
- Closed transition with default to time delay neutral

Features, Benefits and Functions

Standard Features

- Auxiliary relay contacts:
  - Source 1 present 1NO and 1NC
  - Source 2 present 1NO and 1NC
- Switch position indication contacts:
  - Source 1 position 1NO and 1NC
  - Source 2 position 1NO and 1NC
- Source 1 and Source 2 sensing:
  - Undervoltage/ underfrequency
  - Overvoltage/ overfrequency
- Go to emergency (Source 2)
- Seven field-programmable time delays
- LCD-based display for programming, system diagnostics and Help message display
- Mimic diagram with source available and connected LED indication
- Time-stamped history log
- System TEST pushbutton
- Programmable plant exerciser—OFF, daily, 7-day interval selectable run time 0–600 minutes no load/load with fail-safe
- Multi-Tap transformer
- Closed transition parallel limit timer
- IBC/CBC seismic qualified

Optional Features

- Available surge suppression device for power/controller, engine start circuit, phone and cable connections
- Space heater with thermostat
- Ammeter—load side
- Power quality metering
- Steel cover for controller
- Closed transition with default to time delay neutral or default to load voltage decay
- Three-phase rotation protection
- Three-phase voltage unbalance
- Pretransfer signal contacts 1NO/1NC (with three-position mechanism)

Commercial Design Highlights

- UL 1008 front access
- High withstand and closing ratings
- Compact design

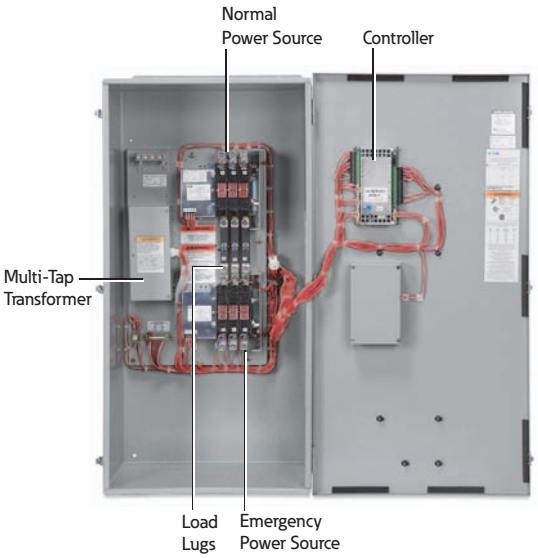

Typical Contactor-Based ATC-900 Controller

Catalog Number Selection

Automatic Transfer Switch

CT C 9 C3 X 3 0400 X S U

Type
CT = Closed transition

Orientation
C = Contactor

Logic
9 = ATC-900

Mechanism
C3 = 3-position

Switch
X = Fix mount

Number of Poles
3 = Three-pole
4 = Four-pole

Amperes
0040 = 40 A
0080 = 80 A
0100 = 100 A
0150 = 150 A
0200 = 200 A
0225 = 225 A
0260 = 260 A
0400 = 400 A
0600 = 600 A
0800 = 800 A
1000 = 1000 A
1200 = 1200 A

Voltage
A = 120 V, 60 Hz
B = 208 V, 60 Hz
E = 600 V, 60 Hz
G = 220 V, 50 Hz
H = 380 V, 50 Hz
K = 600 V, 50 Hz
M = 230 V, 50 Hz
W = 240 V, 60 Hz
X = 480 V, 60 Hz
Z = 365 V, 50 Hz

Enclosure
K = Open
S = NEMA 1
J = NEMA 12
R = NEMA 3R

Certification
U = UL listed

Technical Data and Specifications

UL 1008 Short-Circuit Withstand and Close-On Ratings (kA)

UL 1008 Ampere Rating	480 V 0.05 Seconds ①	480 V Specific Breaker	600 V 0.05 Seconds ①	600 V Specific Breaker	Rating When Used with Upstream Fuse Rating (kA)	Test Voltage	Fuse Type	Maximum Fuse Amperes
40	10	30	10	22	100	480	RK5	200
80	10	30	10	22	100	480	RK5	200
100	10	30	10	22	100	480	RK5	200
150	10	30	22	35	100	600	RK5	400
200	10	30	22	35	100	600	RK5	400
225	30	50	50	65	200	600	RK5	600
260	30	50	50	65	200	600	RK5	600
400	30	50	50	65	200	600	RK5	600
600	50	65	50	65	200	600	L, R, J, T	1600
800	50	65	50	65	200	600	L, R, J, T	1600
1000	50	65	50	65	200	600	L, R, J, T	1600
1200	50	65	50	65	200	600	L, R, J, T	1600

Note

① 0.025 seconds up through 200 A.

Dimensions

Approximate Dimensions in Inches (mm)

Contactor-Based Transfer Switch 40–1200 A Closed Transition

	Enclosure			Bolt Pattern		Standard Terminals		
Ampere Rating	A (Height)	B (Width)	C (Depth)	G (Horizontal)	H (Vertical)	Load Side, Normal and Standby Source	Neutral Connection	Weight in Lb (kg)
40–100 at 480 V	52.74 (1339.6)	25.00 (635.0)	17.18 (436.4)	16.00 (406.4)	37.38 (949.5)	(1) #14–2/0	(3) #14–2/0	190 (86)
40–100 at 600 V	52.74 (1339.6)	25.00 (635.0)	17.18 (436.4)	16.00 (406.4)	37.38 (949.5)	(1) #6–250 kcmil	(3) #14–1/0	210 (95)
150–200 at 480 V	52.74 (1339.6)	25.00 (635.0)	17.18 (436.4)	16.00 (406.4)	37.38 (949.5)	(1) #6–250 kcmil	(3) 1/0–250 kcmil	210 (95)
150–200 at 600 V ①	71.02 (1803.9)	31.11 (790.2)	14.72 (373.9)	13.00 (330.2)	69.43 (1763.5)	(2) 3/0–250 kcmil	(6) 250–500 kcmil	800 (363)
225–400 at 480 V	71.02 (1803.9)	31.11 (790.2)	14.72 (373.9)	13.00 (330.2)	69.43 (1763.5)	(2) 3/0–250 kcmil	(6) 250–500 kcmil	420 (191)
225–1200 at 600 V ①	90.00 (2286.0)	46.00 (1168.4)	32.00 (812.8)	N/A	N/A	(4) 1/0–750 Cu/Al	(12) 1/0–750 kcmil	800 (363)
600–1200 at 480 V ①	90.00 (2286.0)	46.00 (1168.4)	32.00 (812.8)	N/A	N/A	(4) 1/0–750 Cu/Al	(12) 1/0–750 kcmil	800 (363)

Automatic Up to 400 A Wallmount NEMA 1 and NEMA 3R

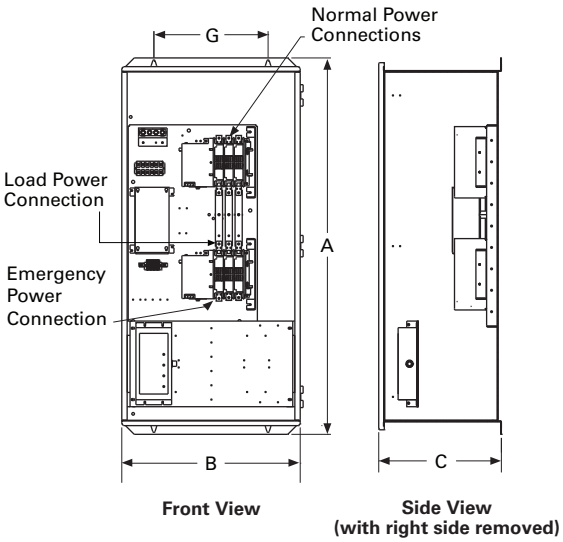

Automatic 600–1200 A—Wallmount NEMA 1 and NEMA 3R

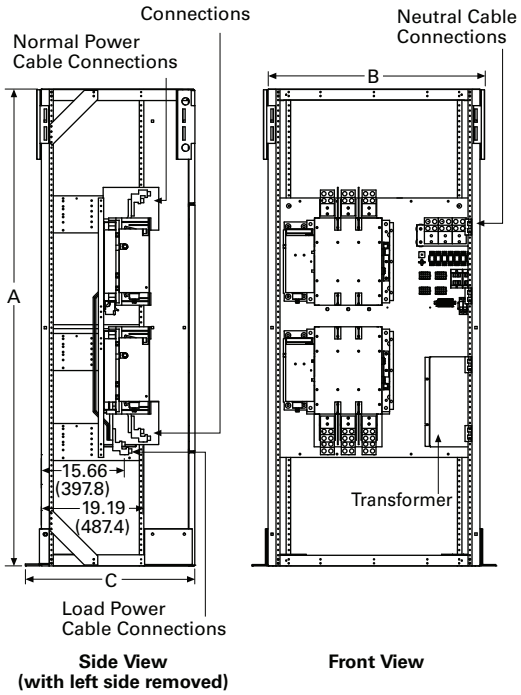

Note

① For NEMA 3R, add 17.00 inches (431.8 mm) to depth.

Bypass Isolation Transfer Switch

Contents

Description	*Page*
Automatic Open Transition, 40–1600 A	**V2-T5-8**
Automatic Closed Transition, 40–1200 A	**V2-T5-13**
Bypass Isolation Transfer Switches, 40–1600 A, Dual Drawout	
Standards and Certifications	**V2-T5-19**
Catalog Number Selection	**V2-T5-19**
Technical Data and Specifications	**V2-T5-19**
Diagram	**V2-T5-20**
Dimensions	**V2-T5-21**
Bypass Isolation Transfer Switches, 40–1200 A, Fixed Bypass	**V2-T5-22**
Service Entrance Rated Automatic Open Transition, 40–1600 A	**V2-T5-27**

Bypass Isolation Transfer Switches, 40–1600 A, Dual Drawout

Product Description

A bypass isolation transfer switch may be used to provide emergency power to life safety and other critical loads where maintenance of the main transfer switch, without interruption of power to the load, is either desirable or required.

Application Description

Eaton's Automatic Transfer Switch is designed to provide unmatched performance, reliability and versatility for critical standby power applications. The switches can be equipped with the ATC-300+ or ATC-900 controllers to match your application needs.

A bypass isolation automatic transfer switch by application requirements and per UL 1008 requires the main automatic transfer switch contactor (ATS) to be a drawout design. Conventional designs allow the bypass contactor to be a fixed-mounted design. The Eaton premium design provides a drawout ATS and a drawout bypass contactor or a dual drawout design.

Features, Benefits and Functions

Industrial Design Highlights

- Front access is a standard feature on all ratings
- Entry:
  - Top, bottom or both
  - Isolated compartments
- Improved safety:
  - Isolated compartments with barriers
  - Single motion rack-out with doors closed
  - Ability to test power switching elements during drawout process
- Dual ATS capability—bypass contactor can be controlled by the ATS controller in the bypass mode of operation
- Installation flexibility:
  - Field entry/exit locations can be modified in the field
  - Interchangeable drawout contactors
- Field-selectable multi-tap transformer panel permits operation on a wide range of system voltages
- Dual drawout

Standard Features

- Drawout cassette design on both ATS and bypass
- No service interruption in bypass to the same source
- Source available contacts:
  - Source 1 present 2NO and 2NC
  - Source 2 present 2NO and 2NC
- Switch position contacts:
  - Source 1 position 1NO and 1NC
  - Source 2 position 1NO and 1NC
- Source 1 and Source 2 sensing:
  - Undervoltage/underfrequency
  - Overvoltage/overfrequency
  - Three-phase rotation protection (ATC-300+ only)
  - Three-phase voltage unbalance/loss (ATC-300+ only)
- Pretransfer signal contacts 1NO and 1NC (open transition only)
- Go to Source 2 (EMERGENCY)
- Field-programmable time delays:
  - Time delay engine start: 0–1200 seconds
  - Time delay normal to emergency: 0–1800 seconds
  - Time delay emergency to normal: 0–1800 seconds
  - Time delay engine cooldown: 0–1800 seconds
  - Time delay emergency failure: 0–6 seconds
- LCD-based display for programming, system diagnostics and Help menu display
- Mimic diagram with source available and connected LED indication
- Time-stamped history log
- System TEST pushbutton
- Programmable plant exerciser—OFF, daily, 7-, 14-, 28-day interval selectable run time 0–600 minutes no load/load with fail-safe

Optional Features

- Available UL 1448 Third Edition surge protection device (SPD)
- Eaton IQ and Power Xpert multi-function power quality metering
- Automatic transfer mode with selectable non-automatic/automatic retransfer mode
- Modbus RTU via RS-485
- Remote annunciation with control
- Open in-phase transition, time delay neutral or in-phase with a default to time delay neutral transfer
- ATC-900 controller
  - Includes Modbus RTU via RS-485
  - Includes four programmable inputs/outputs
  - Includes two plant exercisers
  - Includes LCD color display with easy navigation tools to settings and event logs
  - Expandable I/O (up to 20 I/O total)
  - Optional integrated load metering
  - Optional EtherNet TCP/IP communications

Bypass Isolation Switch Components

Front Access
Front access is a standard feature. Source 1 (NORMAL) Source and Load connections are set up as standard top entry and Source 2 (EMERGENCY) Source connections as bottom entry. These connections are located in their own separate compartments. These connections can be relocated in the field if necessary.

Multi-Tap Transformer
The industry-exclusive multi-tap system voltage selector allows the transfer switch to be applied on most system voltages by proper insertion of the selector plug.

Drawout Contactors
The ATS and the bypass drawout cassette power contactor designs are identical and interchangeable. This standard feature allows the user the ability to withdraw, maintain or swap contactor assemblies, providing redundancy of ATS and bypass functions from one contactor assembly to the other.

Improved Safety
The unique Eaton design includes separation between control and power components. The ATS and bypass isolation contactors are mounted in separate compartments with protective barriers between them. This design prevents the possibility of contact with the rear-mounted power connections to the contactors. In addition, the top and bottom entry have separate compartment doors.

Ease of Maintenance
Transfer to the bypass power contactor is easily initiated and controlled via door-mounted controls. Once the transfer to the bypass contactor is complete, the ATS contactor is easily racked out with the compartment door closed. The ATS contactor may then be tested in the racked out position.

Ease of Transfer
The Eaton design allows the operator to make a quick and simple transfer from the ATS power contactor to the bypass contactor by initiating the electrically operated transfer via a two-position switch. Door-mounted indicating lights confirm that a successful transfer has taken place.

Dual ATS Capability
The controller on conventional bypass isolation switches only controls the ATS contactor. The Eaton design allows the switch controller to remain active in both the ATS and bypass modes, thus providing control to either contactor. This ability of the controller to remain active and control the bypass isolation contactor provides "N+1" redundancy of a second fully functioning ATS, a feature unique to Eaton.

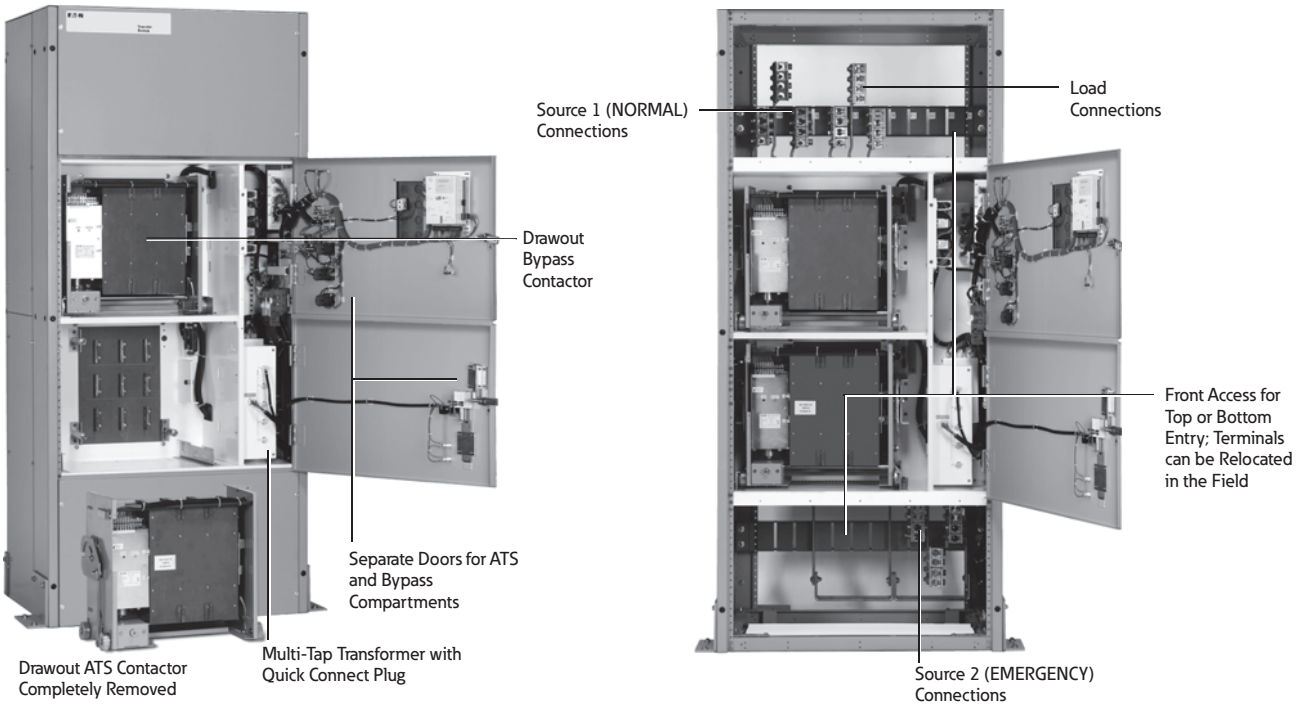

Bypass Isolation Switch Components

Standards and Certifications

- UL 1008 listed
- CSA C22.2 No. 178 certified

Listed

Catalog Number Selection

Automatic Bypass Isolation Contactor-Based Transfer Switch

BI C 3 C3 E 3 1200 W S U

Type
- **BI** = Bypass isolation open transition
- **CB** = Bypass isolation closed transition

Orientation
- **C** = Contactor

Logic
- **3** = ATC-300+
- **9** = ATC-900

Frame
- **C3** = Time delay neutral (TDN) only
- **C5** = In-phase/TDN transfer

Mounting
- **E** = Drawout

Number of Poles
- **2** = Two-pole
- **3** = Three-pole
- **4** = Four-pole

Amperes
- **0100** = 100 A
- **0150** = 150 A
- **0225** = 225 A
- **0260** = 260 A
- **0400** = 400 A
- **0600** = 600 A
- **0800** = 800 A
- **1000** = 1000 A
- **1200** = 1200 A
- **1600** = 1600 A ①

Voltage
- **B** = 208 V, 60 Hz
- **E** = 600 V, 60 Hz
- **G** = 220 V, 50 Hz
- **H** = 380 V, 50 Hz
- **K** = 600 V, 50 Hz
- **M** = 230 V, 50 Hz
- **N** = 401 V, 50 Hz
- **O** = 415 V, 50 Hz
- **W** = 240 V, 60 Hz
- **X** = 480 V, 60 Hz
- **Z** = 365 V, 50 Hz

Enclosure
- **S** = NEMA 1
- **R** = NEMA 3R

Certification
- **U** = UL 1008 listed

Technical Data and Specifications

UL 1008 Short-Circuit Withstand and Close-On Ratings (kA)

UL 1008 Ampere Rating	480 V 0.05 Seconds ②	480 V Specific Breaker	600 V 0.05 Seconds ②	600 V Specific Breaker	Rating When Used with Upstream Fuse: Rating (kA)	Test Voltage	Fuse Type	Maximum Fuse Amperes
40	10	30	10	22	100	480	RK5	200
80	10	30	10	22	100	480	RK5	200
100	10	30	10	22	100	480	RK5	200
150	10	30	22	35	100	600	RK5	400
200	10	30	22	35	100	600	RK5	400
225	30	50	50	65	200	600	RK5	600
260	30	50	50	65	200	600	RK5	600
400	30	50	50	65	200	600	RK5	600
600	50	65	50	65	200	600	L	1200
800	50	65	50	65	200	600	L	1200
1000	50	65	50	65	200	600	L	1600
1200	50	65	50	65	200	600	L	1600
1600	50	65	—	—	200	480	L	1600

Notes

① 1600 A is dual drawout only and up to 480 V.

② 0.025 seconds up through 200 A.

Diagram

Bypass Isolation

Shown as Normal Operation

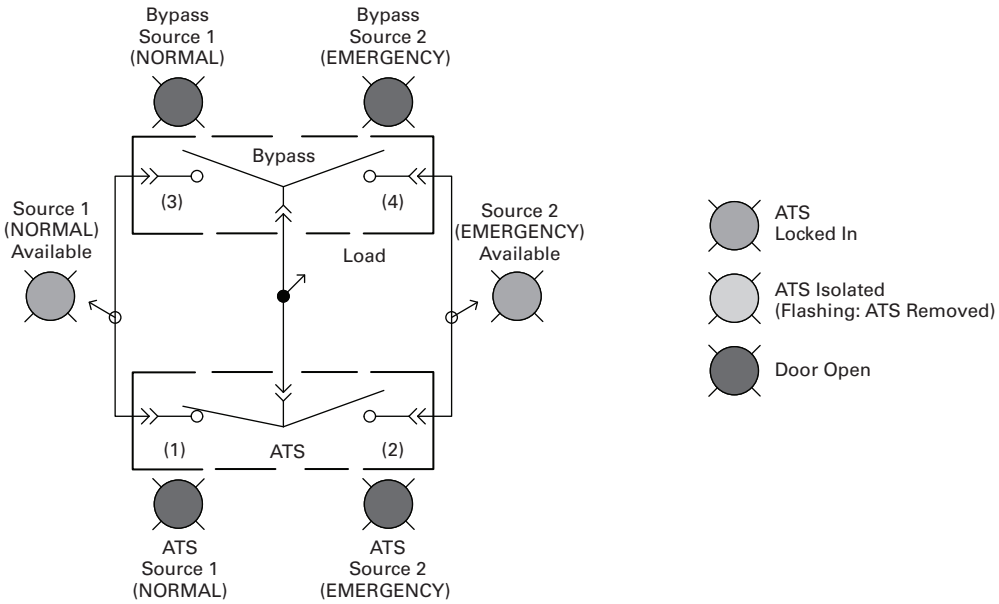

1200 A Drawout Bypass

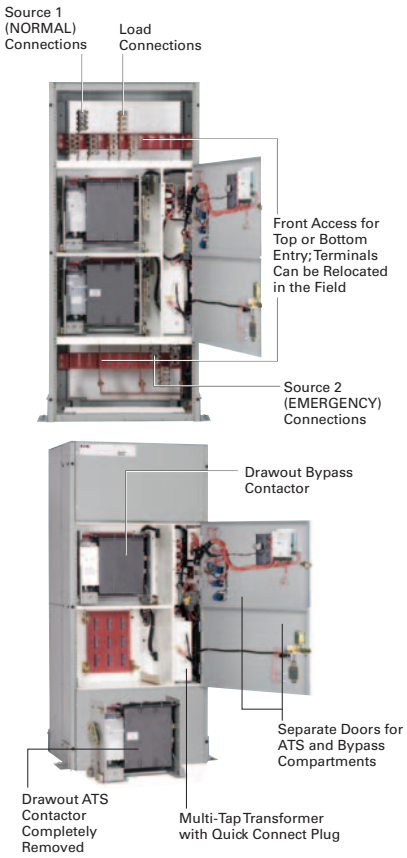

400 A Drawout Bypass

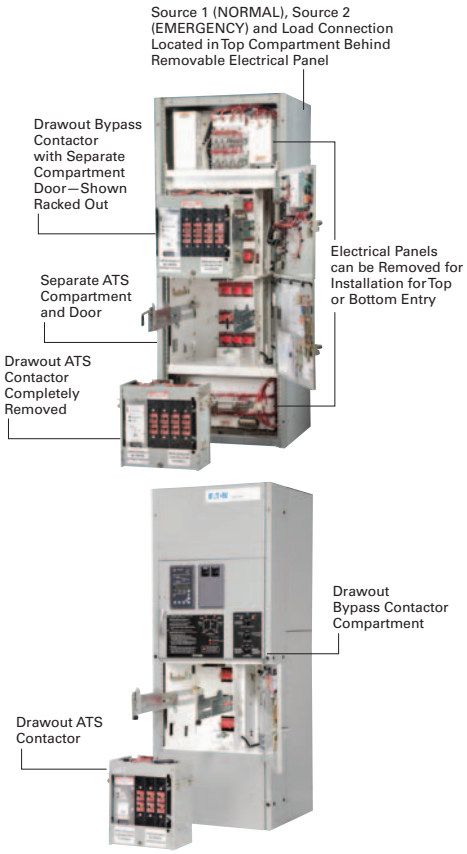

Dimensions

Approximate Dimensions in Inches (mm)

600–1200 A 480 V or 225–1200 A 600 V Dual Drawout Bypass NEMA 1

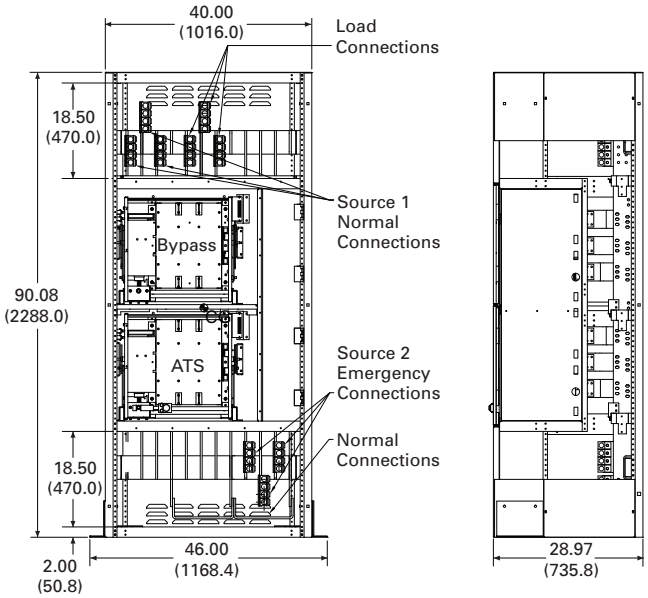

Front View **Side View**

100–400 A 480 V or 100–200 A 600 V Dual Drawout Bypass NEMA 1

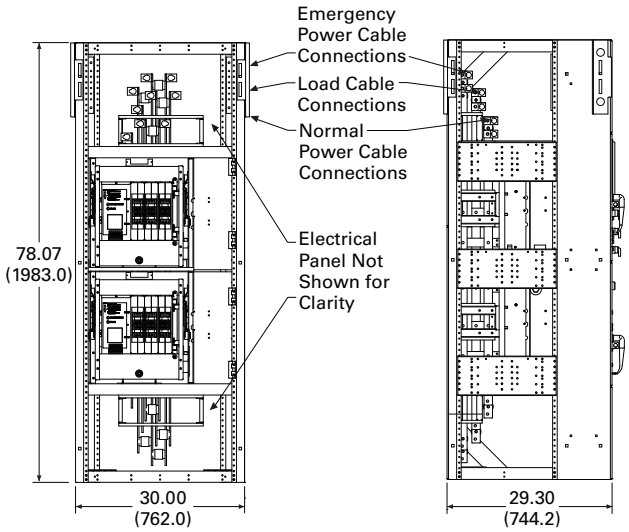

Front View **Side View**

Note: Source 1 Normal and Load connections are top and Source 2 is bottom. These connections can be relocated in the field.

Contactor-Based Transfer Switch 100–1200 A—NEMA 1 Dimensions and Approximate Shipping Weight

	Enclosure Seismic ①			Standard Terminals			
Ampere Rating ②	**Height**	**Width**	**Depth**	**Normal, Emergency and Load**	**Neutral**	**Metric Conversion (mm^2) ③**	**Weight in Lb (kg)**
100–200 A at 480 V ④	78.07 (1983.0)	30.00 (762.0)	29.30 (744.2)	(1) #6–350 Cu/Al	(3) #6–350 Cu/Al	13–177 mm^2 Cu/Al	625 (283.8)
100–200 A at 600 V ④	78.07 (1983.0)	30.00 (762.0)	29.30 (744.2)	(1) #6–350 Cu/Al	(3) #6–350 Cu/Al	13–177 mm^2 Cu/Al	625 (283.8)
225–400 A at 480 V ④	78.07 (1983.0)	30.00 (762.0)	29.30 (744.2)	(1) 3/0–600 Cu/Al	(3) 3/0–600 Cu/Al	85–304 mm^2 Cu/Al	625 (283.8)
225–400 A at 600 V ⑤	90.00 (2286.0)	40.00 (1016.0)	28.97 (735.8)	(2) 3/0–750 Cu/Al	(6) 3/0–750 Cu/Al	85–304 mm^2 Cu/Al	1750 (794.5)
600 A at 480 V ⑤	90.00 (2286.0)	40.00 (1016.0)	28.97 (735.8)	(2) 3/0–750 Cu/Al	(6) 3/0–750 Cu/Al	85–380 mm^2 Cu/Al	1750 (794.5)
600 A at 600 V ⑤	90.00 (2286.0)	40.00 (1016.0)	28.97 (735.8)	(2) 3/0–750 Cu/Al	(6) 3/0–750 Cu/Al	85–380 mm^2 Cu/Al	1750 (794.5)
800–1200 A at 480 V ⑤	90.00 (2286.0)	40.00 (1016.0)	28.97 (735.8)	(4) 3/0–750 Cu/Al	(12) 3/0–750 Cu/Al	85–380 mm^2 Cu/Al	1850 (839.9)
800–1200 A at 600 V ⑤	90.00 (2286.0)	40.00 (1016.0)	28.97 (735.8)	(4) 3/0–750 Cu/Al	(12) 3/0–750 Cu/Al	85–380 mm^2 Cu/Al	1850 (839.9)

Notes

① For seismic applications, it is necessary to use 5–13 UNC Grade or better hex head bolts and washers torqued to 50 ft-lbs.
② NEMA 12 and 4X dimensions are 90.00 inches H x 46.00 inches W x 38.00 inches D (2286.0 mm H x 1168.4 mm W x 965.2 mm D). NEMA 4X enclosures are 304SS standard with an optional upgrade to 316SS.
③ Same number of terminals per phase will be supplied.
④ For NEMA 3R dimensions, add 18.29 inches (464.6 mm).
⑤ For NEMA 3R dimensions, add 18.59 inches (472.2 mm).

Bypass Isolation Transfer Switch

Contents

Description	*Page*
Automatic Open Transition, 40–1600 A	**V2-T5-8**
Automatic Closed Transition, 40–1200 A	**V2-T5-13**
Bypass Isolation Transfer Switches, 40–1600 A, Dual Drawout	**V2-T5-17**
Bypass Isolation Transfer Switches, 40–1200 A, Fixed Bypass	**V2-T5-22**
Catalog Number Selection	**V2-T5-24**
Technical Data and Specifications	**V2-T5-24**
Diagram	**V2-T5-25**
Dimensions	**V2-T5-26**
Service Entrance Rated Automatic Open Transition, 40–1600 A	**V2-T5-27**

Bypass Isolation Transfer Switches, 40–1200 A, Fixed Bypass

Product Description

A bypass isolation transfer switch may be used to provide emergency power to life safety and other critical loads where maintenance of the main transfer switch, without interruption of power to the load, is either desirable or required.

Application Description

Eaton's Automatic Transfer Switch is designed to provide unmatched performance, reliability and versatility for critical standby power applications. The switches can be equipped with the ATC-300+ or ATC-900 controllers to match your application needs.

Features

Industrial Design Highlights

- Front access is a standard feature on all ratings
- Entry:
  - Top, bottom or both
  - Isolated compartments
- Improved safety:
  - Isolated compartments with barriers
  - Single motion rack-out with doors closed
  - Ability to test power switching elements during drawout process
  - Dual ATS capability—bypass contactor can be controlled by the ATS controller in the bypass mode of operation
- Installation flexibility:
  - Field entry/exit locations can be modified in the field
  - Interchangeable drawout contactors
- Field-selectable multi-tap transformer panel permits operation on a wide range of system voltages
- Fixed-mounted bypass, drawout ATS

Standard Features

- Drawout cassette design on ATS with fixed-mounted bypass
- No service interruption in bypass to the same source
- Source available contacts:
  - Source 1 present 2NO and 2NC
  - Source 2 present 2NO and 2NC
- Switch position contacts:
  - Source 1 position 1NO and 1NC
  - Source 2 position 1NO and 1NC
- Source 1 and Source 2 sensing:
  - Undervoltage/underfrequency
  - Overvoltage/overfrequency
  - Three-phase rotation protection (ATC-300+ only)
  - Three-phase voltage unbalance/loss (ATC-300+ only)
- Pretransfer signal contacts 1NO and 1NC (open transition only)
- Go to Source 2 (EMERGENCY)
- Field-programmable time delays:
  - Time delay engine start: 0–1200 seconds
  - Time delay normal to emergency: 0–1800 seconds
  - Time delay emergency to normal: 0–1800 seconds
  - Time delay engine cooldown: 0–1800 seconds
  - Time delay emergency failure: 0–6 seconds
- LCD-based display for programming, system diagnostics and Help menu display
- Mimic diagram with source available and connected LED indication
- Time-stamped history log
- System TEST pushbutton
- Programmable plant exerciser—OFF, daily, 7-, 14-, 28-day interval selectable run time 0–600 minutes no load/load with fail-safe (ATC-300+ only)

Optional Features

- Available UL 1448 Third Edition surge protection device (SPD)
- Eaton IQ and Power Xpert multi-function power quality metering
- Automatic transfer mode with selectable non-automatic/automatic retransfer mode
- Modbus RTU via RS-485
- Remote annunciation with control
- Open in-phase transition, time delay neutral or in-phase with a default to time delay neutral transfer
- ATC-900 controller
  - Includes Modbus RTU via RS-485
  - Includes four programmable inputs/outputs
  - Includes two plant exercisers
  - Includes LCD color display with easy navigation tools to settings and event logs
  - Expandable I/O (up to 20 I/O total)
  - Optional integrated load metering
  - Optional EtherNet TCP/IP communications

Bypass Isolation Switch Components

Front Access
Front access is a standard feature. Source 1 (NORMAL), Source 2 (EMERGENCY) and Load connections are set up as bottom entry. These connections are located in their own separate compartments.

Multi-Tap Transformer
The industry-exclusive Multi-Tap system voltage selector allows the transfer switch to be applied on most system voltages by proper insertion of the selector plug.

Drawout ATS and Fixed-Mounted Bypass
The ATS is designed as a drawout with the contactor mounted in a cassette with wheels. This allows the user the ability to withdraw, maintain, inspect and re-insert the ATS.

The bypass unit is designed as a fixed-mounted design in its own separate compartment.

Improved Safety
The unique Eaton design includes separation between control and power components. The ATS and bypass isolation contactors are mounted in separate compartments with protective barriers between them. This design prevents the possibility of contact with the rear-mounted power connections to the contactors. In addition, the top and bottom entry have separate compartment doors.

Ease of Maintenance
Transfer to the bypass power contactor is easily initiated and controlled via door-mounted controls. Once the transfer to the bypass contactor is complete, the ATS contactor is easily racked out with the compartment door closed. The ATS contactor may then be tested in the isolated position.

Ease of Transfer
The Eaton design allows the operator to make a quick and simple transfer from the ATS power contactor to the bypass contactor by initiating the electrically operated transfer via a two-position switch. Door-mounted indicating lights confirm that a successful transfer has taken place.

Dual ATS Capability
The controller on conventional bypass isolation switches only controls the ATS contactor. The Eaton design allows the switch controller to remain active in both the ATS and bypass modes, thus providing control to either contactor. This ability of the controller to remain active and control the bypass isolation contactor provides "N+1" redundancy of a second fully functioning ATS, a feature unique to Eaton.

Bypass Isolation—Fixed Bypass Components

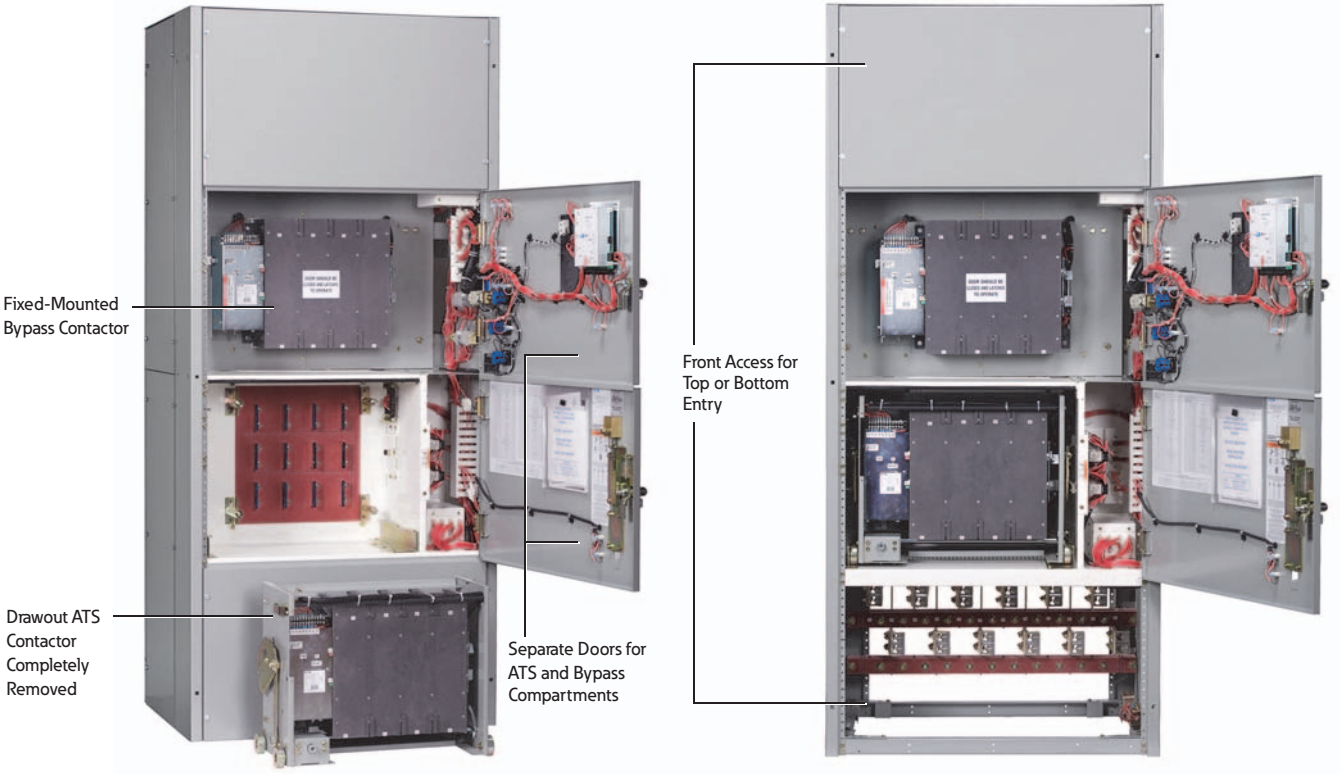

Catalog Number Selection

Automatic Bypass Isolation Contactor-Based Transfer Switch

BI C 3 C3 X 3 1200 W S U

Type
- **BI** = Bypass isolation open transition
- **CB** = Bypass isolation closed transition

Orientation
- **C** = Contactor

Logic
- **3** = ATC-300+
- **9** = ATC-900

Frame
- **C3** = Time delay neutral (TDN) only
- **C5** = In-phase/TDN transfer

Mounting
- **X** = Fixed-mount bypass

Number of Poles
- **2** = Two-pole
- **3** = Three-pole
- **4** = Four-pole

Amperes
- **0100** = 100 A
- **0150** = 150 A
- **0225** = 225 A
- **0260** = 260 A
- **0400** = 400 A
- **0600** = 600 A
- **0800** = 800 A
- **1000** = 1000 A
- **1200** = 1200 A

Voltage
- **B** = 208 V, 60 Hz
- **E** = 600 V, 60 Hz
- **G** = 220 V, 50 Hz
- **H** = 380 V, 50 Hz
- **K** = 600 V, 50 Hz
- **N** = 401 V, 50 Hz
- **O** = 415 V, 50 Hz
- **W** = 240 V, 60 Hz
- **X** = 480 V, 60 Hz

Enclosure
- **S** = NEMA 1
- **R** = NEMA 3R

Certification
- **U** = UL 1008 listed

Technical Data and Specifications

UL 1008 Withstand and Close-On Ratings (kA)

UL 1008 Ampere Rating ①	480 V 0.05 Seconds ②	480 V Specific Breaker	600 V 0.05 Seconds ②	600 V Specific Breaker	Rating When Used with Upstream Fuse: Rating (kA)	Test Voltage	Fuse Type	Maximum Fuse Amperes
100	30	50	22	35	100	480	RK5	200
150	30	50	22	35	100	600	RK5	400
200	30	50	22	35	100	600	RK5	400
225	30	50	50	65	200	600	RK5	600
260	30	50	50	65	200	600	RK5	600
400	30	50	50	65	200	600	RK5	600
600	50	65	50	65	200	600	L	1600
800	50	65	50	65	200	600	L	1600
1000	50	65	50	65	200	600	L	1600
1200	50	65	50	65	200	600	L	1600

Notes

① 1600 A is available on dual drawout only.

② 0.025 seconds up through 200 A.

Diagram

Bypass Isolation

Shown as Normal Operation

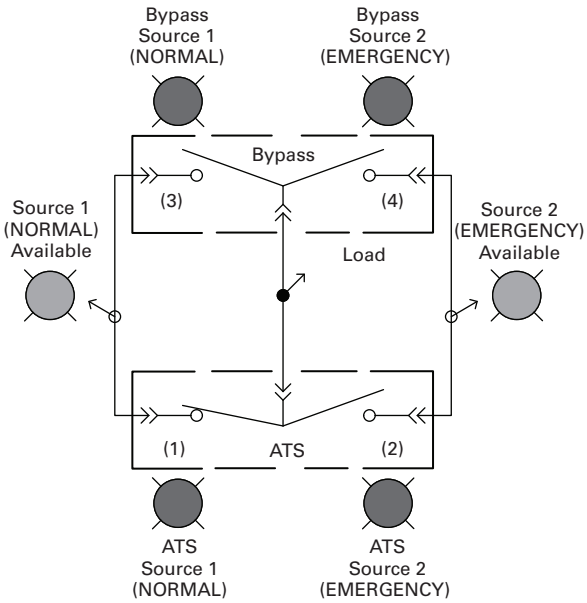

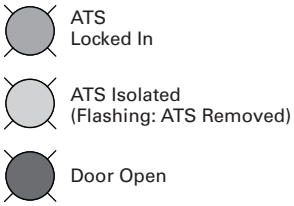

1200 A Fixed Bypass

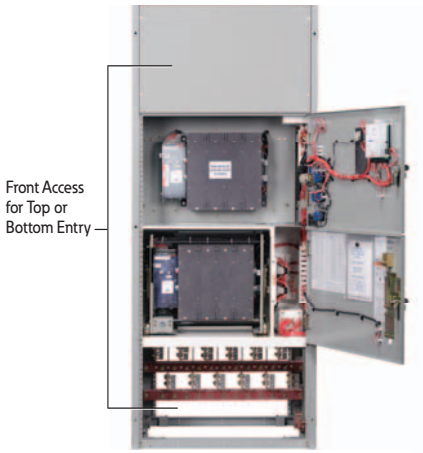

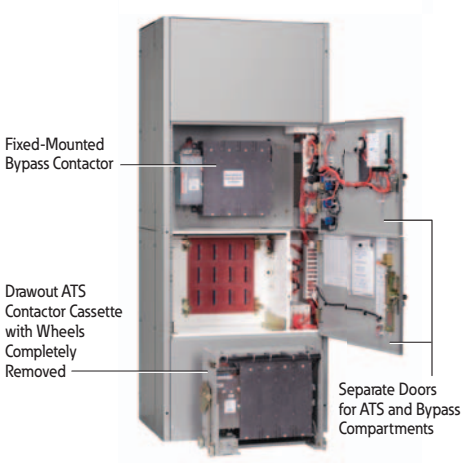

400 A Fixed Bypass

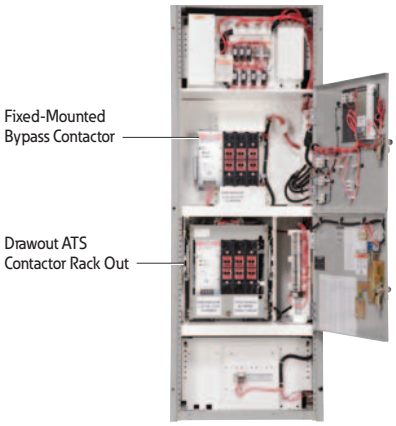

Dimensions

Approximate Dimensions in Inches (mm)

600–1200 A 480 V or 225–1200 A 600 V Fixed Bypass NEMA 1

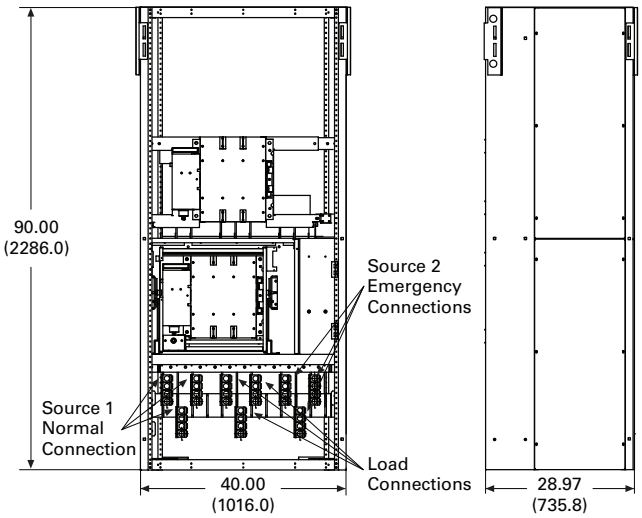

Front View **Side View**

Note: Source 1 Normal, Source 2 Emergency and Load connections must be either ALL top or ALL bottom and are NOT field reconfigurable.

100–400 A 480 V or 100–225 A 600 V Fixed Bypass NEMA 1

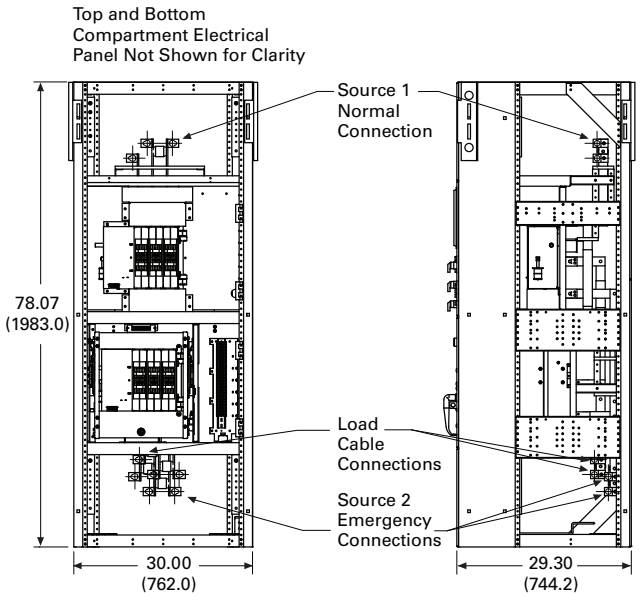

Front View **Side View**

Note: Source 1 Normal, Source 2 Emergency and Load connections are NOT factory or field reconfigurable. Sufficient wireway and bending space is available to come in from either top or bottom.

Contactor-Based Transfer Switch 100–1200 A—NEMA 1 Dimensions and Approximate Shipping Weight

	Enclosure Seismic ①			Standard Terminals			
Ampere Rating	Height	Width	Depth	Normal and Emergency	Load	Neutral	Weight in Lb (kg)
100–200 A at 480 V ②	78.07 (1983.0)	30.00 (762.0)	29.30 (744.2)	(1) #6–350 Cu/Al	(1) #6–350 Cu/Al	(3) #6–350 Cu/Al	625 (283.8)
100–200 A at 600 V ②	78.07 (1983.0)	30.00 (762.0)	29.30 (744.2)	(1) #6–350 Cu/Al	(1) #6–350 Cu/Al	(3) #6–350 Cu/Al	625 (283.8)
225–400 A at 480 V ②	78.07 (1983.0)	30.00 (762.0)	29.30 (744.2)	(1) 3/0–600 Cu/Al	(1) 3/0–600 Cu/Al	(3) 3/0–600 Cu/Al	625 (283.8)
225–400 A at 600 V ③	90.00 (2286.0)	40.00 (1016.0)	28.97 (735.8)	(2) 3/0–750 Cu/Al	(2) 3/0–750 Cu/Al	(6) 3/0–750 Cu/Al	1550 (703.7)
600 A at 480 V ③	90.00 (2286.0)	40.00 (1016.0)	28.97 (735.8)	(2) 3/0–750 Cu/Al	(2) 3/0–750 Cu/Al	(6) 3/0–750 Cu/Al	1550 (703.7)
600 A at 600 V ③	90.00 (2286.0)	40.00 (1016.0)	28.97 (735.8)	(2) 3/0–750 Cu/Al	(2) 3/0–750 Cu/Al	(6) 3/0–750 Cu/Al	1550 (703.7)
800–1200 A at 480 V ③	90.00 (2286.0)	40.00 (1016.0)	28.97 (735.8)	(4) 3/0–750 Cu/Al	(4) 3/0–750 Cu/Al	(12) 3/0–750 Cu/Al	1750 (794.5)
800–1200 A at 600 V ③	90.00 (2286.0)	40.00 (1016.0)	28.97 (735.8)	(4) 3/0–750 Cu/Al	(4) 3/0–750 Cu/Al	(12) 3/0–750 Cu/Al	1750 (794.5)

Notes

① For seismic applications, it is necessary to use 5–13 UNC Grade or better hex head bolts and washers torqued to 50 ft-lbs.
② For NEMA 3R dimensions, add 18.29 inches (464.6 mm).
③ For NEMA 3R dimensions, add 18.59 inches (472.2 mm).

Service Entrance Rated Contactor-Based ATS with ATC-900 Controller

Contents

Description	*Page*
Automatic Open Transition, 40–1600 A	**V2-T5-8**
Automatic Closed Transition, 40–1200 A	**V2-T5-13**
Bypass Isolation Transfer Switches, 40–1600 A, Dual Drawout	**V2-T5-17**
Bypass Isolation Transfer Switches, 40–1200 A, Fixed Bypass	**V2-T5-22**
Service Entrance Rated Automatic Open Transition, 40–1600 A	**V2-T5-27**
Features	**V2-T5-28**
Catalog Number Selection	**V2-T5-32**
Technical Data and Specifications	**V2-T5-32**
Dimensions	**V2-T5-33**

Service Entrance Rated Automatic Open Transition, 40–1600 A

Product Description

The service entrance rated automatic open transition contactor-based design transfer switch will provide a fully functioning automatic transfer switch with an integrated upstream breaker to be applied and installed directly at the point of service entrance.

Eaton's service entrance rated contactor design has been tested and is listed as a 100% rated UL 1008 ATS (automatic transfer switch). In addition, the service entrance rated ATS will have a 100% load rating. The capability to provide a 100% load rating eliminates confusion in applying a 100% rated ATS with a breaker that is only rated for 80% load.

The combined package will provide the ATS in a separate compartment from the upstream breaker. The breaker compartment has a deadfront panel, allowing easy and safe access to the separate contactor compartment when the breaker is tripped to the off position and locked out. Line side connections are made in the breaker compartment and Source 2 and load connections are made in the contactor compartment. The main contactor compartment includes the main power switching device, auxiliary relays, control power and the controller.

The upstream breaker will use the Eaton 310+ trip unit, allowing the user to modify the continuous current rating, adjustable protection curve shaping with LSI or LSIG adjustability and optional selection of the Arcflash Reduction Maintenance System to address National Electrical Code® Section 240.87 for arc energy reduction.

Application Description

The service entrance rated contactor-based design can be used on applications requiring an integrated automatic transfer switch with an upstream breaker. The combined or integrated offering can be used and will come listed as a 100% rated to UL 1008 as suitable for use as service equipment. In addition, the transfer switch will be marked as "Continuous load current not to exceed 100 percent of switch rating."

Features

Standard Features—with ATC-300+ Controller

- Auxiliary relay contacts:
  - Source 1 present 2NO and 2NC
  - Source 2 present 2NO and 2NC
- Switch position indication contacts:
  - Source 1 position 1NO and 1NC
  - Source 2 position 1NO and 1NC
- Source 1 and Source 2 sensing:
  - Undervoltage/underfrequency
  - Overvoltage/overfrequency
  - Three-phase rotation protection
  - Three-phase voltage unbalance
- Pretransfer signal contacts 1NO/1NC (with three-position mechanism)
- Go to emergency (Source 2)
- Seven field-programmable time delays
- LCD-based display for programming, system diagnostics and Help message display
- Mimic diagram with source available and connected LED indication
- Time-stamped history log
- System TEST pushbutton
- Programmable plant exerciser—OFF, daily, 7-, 14-, 28-day interval selectable run time 0–600 minutes no load/load with fail-safe
- Modbus® RTU via RS-485
- Source 1 Eaton Series G breaker with 310+ electronic trip unit with LSI
- Deadfront compartment for breaker
- Series G breaker with shunt trip
- Separate switch compartment

Optional Features

- Available surge suppression device for power/controller, engine start circuit, phone and cable connections
- Space heater with thermostat
- Eaton IQ and Power Xpert series metering
- Open in-phase transition, time delay neutral or in-phase with a default to time delay neutral transfer
- ATC-300+ and ATC-900 controllers available
- Source 2 inhibit
- Manual retransfer to normal
- Remote annunciator with control
- Ethernet communication (PXG 900 Gateway)
- Breaker with LSIG electronic trip units
- Breaker with Arcflash Reduction Maintenance System

Commercial Design Highlights

- Integrated service entrance rating listed to UL 1008 100% rated
- Meets overload, endurance, temperature rise and withstand rating per UL 1008
- Separate ATS and breaker compartment permits safe access to the ATS
- Combined breaker/ATS reduces overall equipment size and installation cost
- Lockable breaker permits safe downstream maintenance
- Breaker with electronic trip units provide adjustable ratings and adjustable curve shaping

Design Features

Integrated Service Entrance Rating

The service entrance rated contactor design has been tested and listed to UL 1008 as suitable for use as service equipment. In addition, per UL 1008, the switch is rated for 100% load ratings and eliminates application considerations when applying a 100% rated ATS with 100% load ratings.

Separate Compartment for ATS and Breaker

The standard design includes a separate deadfront compartment for the incoming breaker and separate compartment for the ATS. This innovative design provides simplified access to cable entrance areas and can reduce personal protection equipment (PPE) requirements when performing installation or routine maintenance.

Electronic Trip Unit on SE Breaker

The service entrance breaker is an Eaton Series G breaker with the 310+ trip unit that provides adjustable rating and breaker curve shaping. The trip unit comes with either LSI or LSIG curve shaping capability. The long delay and short delay functions enable the breaker curves to be manipulated for upstream and downstream breaker coordination.

Arcflash Reduction Maintenance System™

The Eaton 310+ electronic trip units address the National Electrical Code® Section 240.87 for Arc Energy Reduction. These molded-case circuit breakers provide two approved methods to reduce arc energy: energy-reducing maintenance switching with local status indicator and zone selective interlocking.

ATC-300+ Controller

Eaton's ATC-300+ controller offers a full set of programmable time delays, source 2 inhibit and manual retransfer. The controller comes standard with Modbus communications.

ATC-900 Controller

Eaton's new ATC-900 controller brings ease of use, adaptability, supervisory and programming capabilities to mission-critical applications. The 4.3-inch color TFT display provides simple arrow keys for quick screen navigation. Event logging and recording of time-stamped events are viewed easily. Field configuration of I/O allows user adaptability to special requirements.

Multi-Tap Voltage Selector

Allows the transfer switch to be readily applied on most system voltages by connecting to the proper terminals. Available system voltages include 120, 208, 220, 240, 277 or 480 Vac, 60 Hz. The non quick connect multi-tap transformer is standard on units up to 400 A and the quick re-connect version is standard on 600–1600 A.

Lockable Breaker

The upstream service rated breaker includes a door-mounted keyed switch that will allow the breaker to be tripped to the OFF position and electrically locked out. The keyed switch has a Normal position and Disconnect position that indicates the breaker has been tripped. Once in the Disconnect position, the key may be removed. In addition there is a ship loose handle hasp that allows the breaker handle to be mechanically locked out.

ATC-300+ and ATC-900 Controller Features

Description	Automatic Controllers ATC-300+	ATC-900
Basic transfer control, plant exerciser, time delays, self diagnostics and system settings	Standard	Standard
Source mimic diagram with LED indication	Standard	Standard
Engine test and start contact	Standard	Standard
Dual source control power input	Standard	Standard
Liquid crystal display (LCD)	Standard	Standard
Programmable set points and plant exerciser	Standard	Standard
Password protection	Standard	Standard
Time stamped history and event log	Standard	Standard
Time delay bypass	Standard	Standard
Go to source 2 control input	Standard	Standard
Pre-transfer and general alarm control outputs	Standard	Standard
Lockout and monitor modes	Standard	Standard
Source status output relay contacts	Standard	Standard
Modbus RTU communication	Standard	Standard
Manual retransfer control input	Optional	Standard
Source 2 input / load shed input	Optional	Standard
USB port—profile and data management	—	Standard
Preferred source selection	—	Standard
Dual generator capability	—	Standard
User configurable inputs/outputs	—	Standard
Advanced diagnostics and troubleshooting with pre-/post-event data capture	—	Standard
Integrated load metering	—	Optional
Load management with selective load shed	—	Optional
DC voltage control power input	—	Optional
Three source ATS master/slave control	—	Optional
Modbus TCP/IP communication ①	Optional	Optional

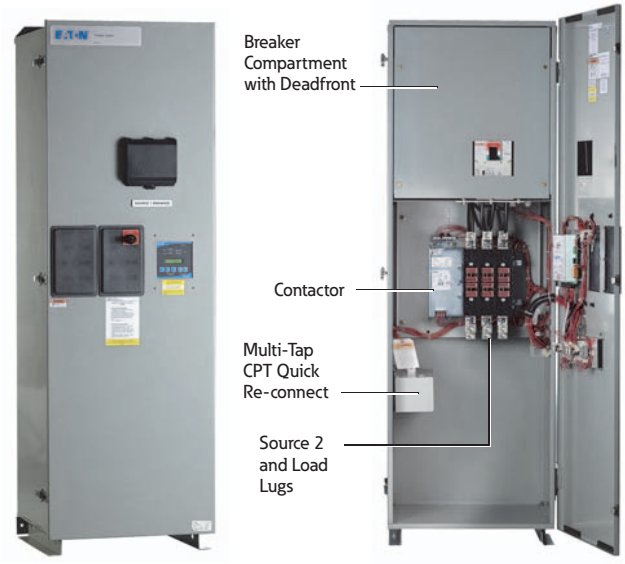

225–400 A Service Entrance Contactor NEMA 1

Typical Service Entrance ATS Construction for 600–1000 A NEMA 1

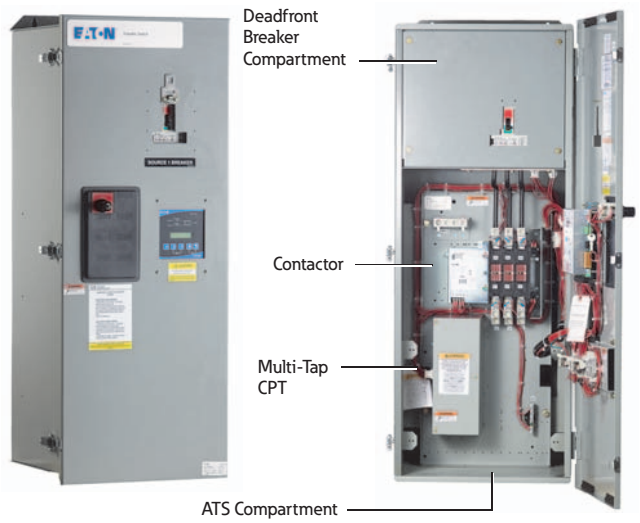

40–200 A Service Entrance Contactor NEMA 1

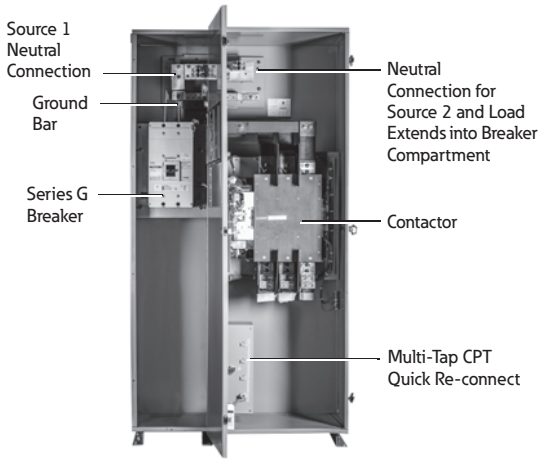

600–1000 A Service Entrance Contactor NEMA 1
(ATS Door Open and Breaker Compartment Panel Removed)

Note

① Modbus TCP/IP ..... resources use of Modbus RTU port.

1200 –1600 A Service Entrance
Rated Contactor Design NEMA 1

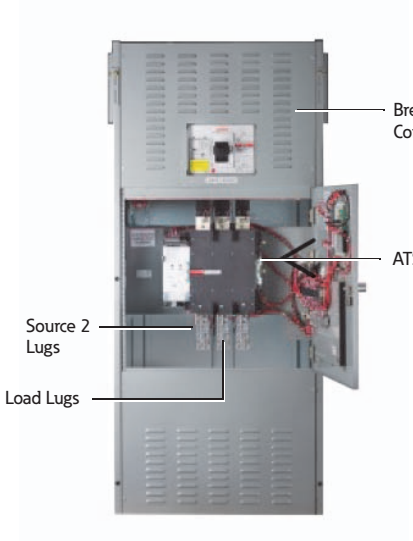

1200–1600 A Service Entrance
ATS Compartment Door Open

1200–1600 A Service Entrance
Breaker Deadfront Not Shown

Catalog Number Selection

Automatic Transfer Switch

AT C 3 C2 C 3 0400 X S U

Type
- **AT** = Automatic
- **NT** = Non-automatic

Orientation
- **C** = Contactor

Logic
- **3** = ATC-300+
- **9** = ATC-900
- **E** = Electromechanical

Mechanism
- **C2** = In-phase only
- **C3** = Time delay neutral (TDN) only
- **C5** = In-phase / TDN transfer

Switch
- **C** = Breaker on normal side, 100% rated load

Number of Poles
- **2** = Two-pole
- **3** = Three-pole
- **4** = Four-pole

Amperes
- **0040** = 40 A
- **0080** = 80 A
- **0100** = 100 A
- **0150** = 150 A
- **0200** = 200 A
- **0225** = 225 A
- **0260** = 260 A
- **0400** = 400 A
- **0600** = 600 A
- **0800** = 800 A
- **1000** = 1000 A
- **1200** = 1200 A
- **1600** = 1600 A

Voltage
- **B** = 208 V, 60 Hz
- **W** = 240 V, 60 Hz
- **X** = 480 V, 60 Hz

Enclosure
- **S** = NEMA 1
- **R** = NEMA 3R

Certification
- **U** = UL listed

Technical Data and Specifications

UL 1008 Short-Circuit Withstand and Close-On Ampere Ratings

UL 1008 Ampere Rating	Mechanism	Withstand Current Ratings rms Symmetrical 480 V
40, 80, 100	C2	30,000
150, 200	C2	30,000
225, 260, 400	C2	50,000
40, 80, 100, 150, 200	C3, C5	50,000
225, 260, 400	C3, C5	50,000
600, 800, 1000,1200	C3, C5	65,000
1600	C3, C5	65,000

UL 1008 Ratings (100% Rated)

Mounting Type	Voltage	Current Amperes	No. of Poles ①	NEMA Enclosure
Fixed	480	40	2, 3, 4	NEMA 1
	480/277	80		NEMA 3R
	480/240	100		
	415/240	150		
	240	200		
	240/120	225		
	220	260		
	208/120	400		
		600		
		800		
		1000		
		1200		
		1600		

Dimensions

Approximate Dimensions in Inches (mm)

Service Entrance Rated Contactor-Based Transfer Switch 40–1600 A, 100% Load Rating

Ampere Rating	Enclosure	A (Height)	B (Width)	C (Depth)	Normal	Emergency	Load	Neutral	Weight in Lb (kg)
40–100 at 480 V	N1/N3R	52.00 (1320.8)	19.80 (502.9)	16.75 (425.5)	(1) #14–2/0	(1) #14–2/0	(1) #14–2/0	(3) #14–1/0	240 (109)
150–200 at 480 V	N1/N3R	52.00 (1320.8)	19.80 (502.9)	16.75 (425.5)	(1) #6–250 kcmil	(1) #6–250 kcmil	(1) #6–250 kcmil	(3) #6–250 kcmil	300 (136)
225–400 at 480 V	N1/N3R	79.00 (2006.6)	25.25 (641.4)	22.59 (573.8)	(2) 3/0–250 kcmil	(2) 3/0–250 kcmil	(2) 3/0–250 kcmil	(6) 250k–500 kcmil	500 (227)
600–1000 at 480 V	N1/N3R	79.00 (2006.6)	40.37 (1025.4)	22.59 (573.8)	(4) 1/0–750 kcmil	(4) 1/0–750 kcmil	(4) 1/0–750 kcmil	(12) 1/0–750 kcmil	900 (409)
1200 at 480 V	N1/N3R	79.00 (2006.6)	40.37 (1025.4)	22.59 (573.8)	(4) 1/0–750 kcmil	(4) 1/0–750 kcmil	(4) 1/0–750 kcmil	(12) 1/0–750 kcmil	900 (409)
1200 at 480 V	N1	90.00 (2286.0)	40.00 (1016.0)	48.22 (1224.8)	(4) 1/0–750 kcmil	(4) 1/0–750 kcmil	(4) 1/0–750 kcmil	(12) 1/0–750 kcmil	1400 (635)
	N3R			62.50 (1587.5)					1450 (658)
1600 at 480 V	N1	90.00 (2286.0)	40.00 (1016.0)	48.22 (1224.8)	(4) 1/0–750 kcmil	(4) 1/0–750 kcmil	(4) 1/0–750 kcmil	(12) 1/0–750 kcmil	1600 (726)
	N3R			52.50 (1587.5)					1650 (748)

Automatic, 40–200 A, NEMA 1 and NEMA 3R, Wall Mount

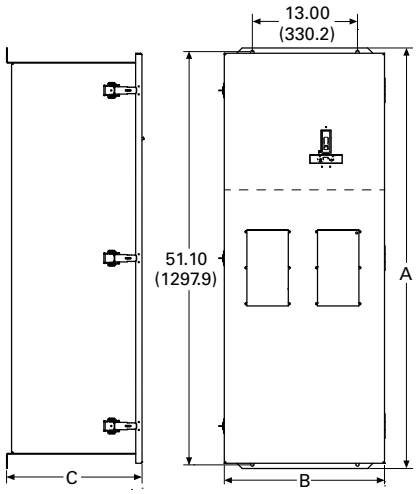

Note

① Two-pole is available up to 800 A.

Automatic, 225–400 A, NEMA 1 and NEMA 3R Floor Standing Wall Attached

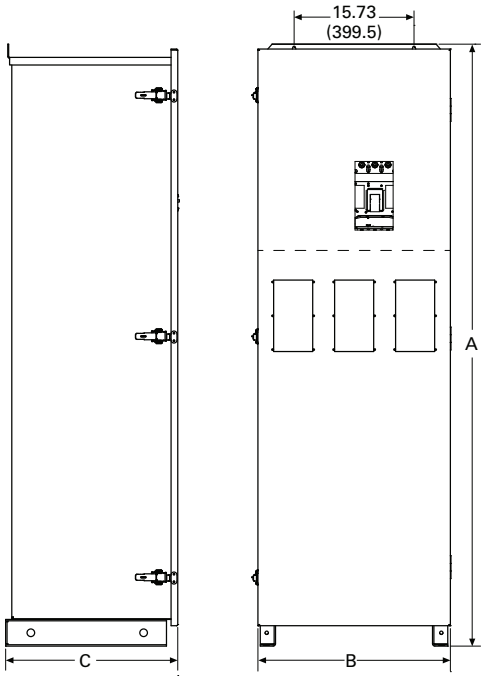

Approximate Dimensions in Inches (mm)

Automatic, 600–1000 A NEMA 1, 600–800 A NEMA 3R

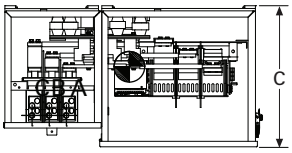

Top View—Roof Removed

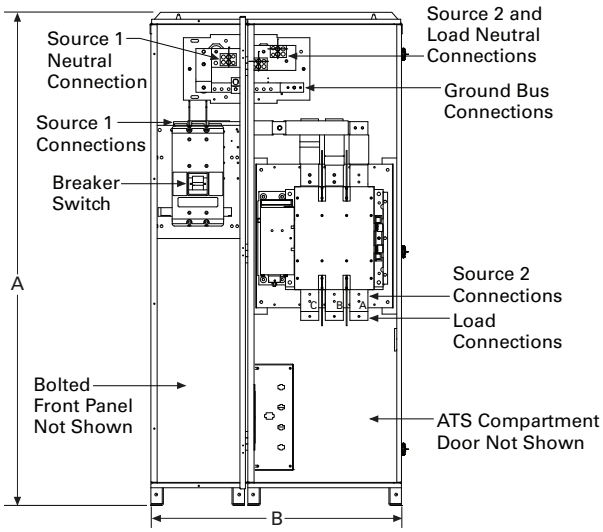

Front View—Doors Removed

Automatic, 1200 A and 1600 A, NEMA 1

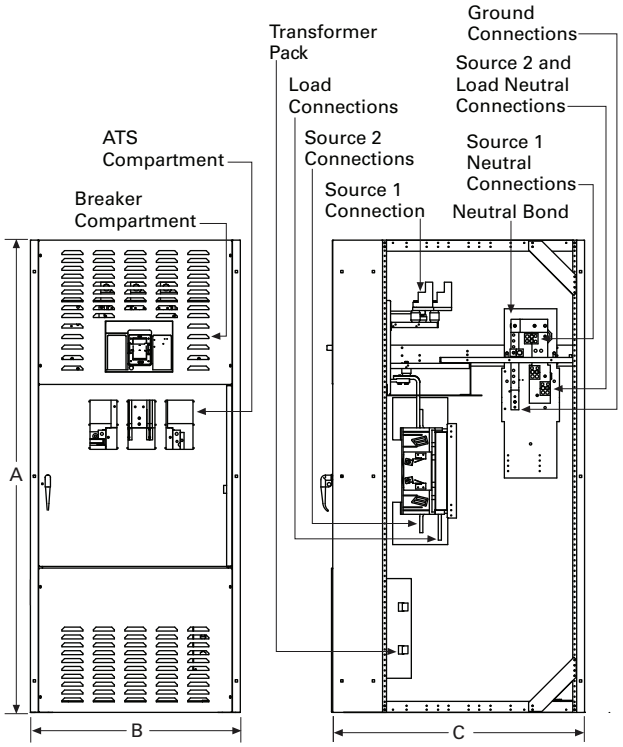

Front View

Side View—Contactor Compartment (Side Panel Removed)

Automatic 1000–1600 A, NEMA 3R

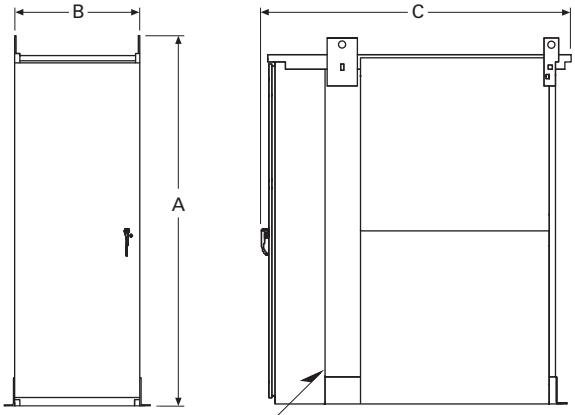

Door Within a Door Design

Manual Wallmount Transfer Switch

Contents

Description	*Page*
Molded Case Switches—Manual Wallmount, 30–1000 A	
Standards and Certifications	**V2-T5-36**
Catalog Number Selection	**V2-T5-36**
Technical Data and Specifications	**V2-T5-37**
Dimensions	**V2-T5-38**
Molded Case Switches—Non-Automatic Wallmount	**V2-T5-39**
Molded Case Switches—Automatic Wallmount, 30–1000 A	**V2-T5-34**
Maintenance Bypass Switches—Type MBHE 100–1000 A	**V2-T5-48**

Molded Case Switches—Manual Wallmount, 30–1000 A

Description

Eaton's wallmount manually operated transfer switches are designed for a variety of standby power applications for critical loads. In the event of a primary power source interruption, the user can manually transfer the load circuits to the standby power source. Once primary power has been restored, the user can manually transfer the load circuits back to the primary power source.

Application Description

Manual transfer switches cover applications ranging from 30 to 1000 A through 600 Vac for standard manual configurations and open transition.

Manual transfer switches may be applied for those application where a manually initiated and manually operated transfer is suitable. The front door of the switch must be opened to operate the manual handle. The design comes standard with a deadfront design, allowing safe manual transfer under load. Should an application require a service entrance rating, then a non-automatic or automatic design needs to be selected.

Features and Benefits

Features

- Molded case switch power contact assemblies
- Positive mechanical interlocking
- Permanently affixed manual operating handle

Benefits

- High withstand, totally enclosed for maximum arc suppression and isolation during power transfer
- Optional trip units offer system overcurrent protection
- Prevents the paralleling of two sources of power
- Permits safe and convenient manual transfer of power
- Requires no control power

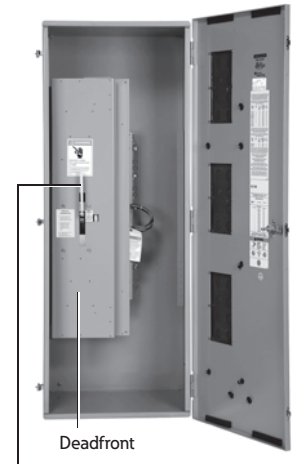

Manual Switch with Door Open—Manually Initiated and Manually Operated

Note: If a service entrance rating is required, then a non-automatic type switch must be selected. Service entrance ratings are not available on a manual transfer switch.

Manual Switch with Door Closed—Must Open Door to Engage the Manual Handle

Manual Transfer Switch Shown Without Deadfront

Standards and Certifications

- Complies with UL 1008 and UL 489 standards
- IBC seismic qualified

Catalog Number Selection

Manual Breaker-Based Transfer Switch

MT H X MD C 2 0100 E S U

Type
MT = Manual

Orientation
H = Horizontal ①
V = Vertical

Logic
X = No logic

Frame
Molded case device
FD = 30–150 A
KD = 150–300 A
LD = 400–600 A
MD = 600–800 A
NB = 800–1000 A

Mounting (Fixed)
A = FM, N (MCS), E (MCS)
B = FM, N (MCB), E (MCB)
C = FM, N (MCB), E (MCS)
D = FM, N (MCS), E (MCB)

Number of Poles
2 = Two-pole
3 = Three-pole
4 = Four-pole

Amperes
0030 = 30 A
0070 = 70 A
0100 = 100 A
0150 = 150 A
0225 = 225 A
0300 = 300 A
0400 = 400 A
0600 = 600 A
0800 = 800 A
1000 = 1000 A

Voltage
E = 600 V, 60 Hz

Enclosure
K = Open
S = NEMA 1
J = NEMA 12
R = NEMA 3R
L = NEMA 4
D = NEMA 4X

Certification
U = UL 1008 listed

Notes

① Horizontal is available only on ratings 150 A or less.

Service entrance is not available on a manual design.

Technical Data and Specifications

Wallmount Transfer Switch Standard Terminal Data for Power Cable Connections ①

Switch Ampere Rating	Breaker Frame	Line Side (Normal and Standby Source)	Load Connection	Neutral Connection
30–100	HFD	(1) #14–1/0	(1) #14–1/0	(3) #14–1/0
150–225	HFD	(1) #6–300	(1) #6–300	(3) #4–300
225–300	HKD	(1) #3–350	(1) #6–350	(3) #4–350
400	HLD	(1) 4/0–600	(2) #1–500	(6) 250–350
600	HLD	(1) 3/0–350	(2) #1–500	(6) 250–350
600	HMDL	(2) #1–500	(2) #1–500	(12) 4/0–500
600 (four-pole)	NB	(3) 3/0–400	(3) 3/0–400	(3) 3/0–400
800	HMDL	(3) 3/0–400	(3) 3/0–400	(12) 4/0–500
800	HNB	(4) 4/0–500	(4) 4/0–500	(12) 4/0–500
1000	HNB	(4) 4/0–500	(4) 4/0–500	(12) 4/0–500

UL 1008 Short Circuit Withstand and Close-On Ratings (kA)

Standard UL 1008 3-Cycle—Horizontal and Vertical Industrial

ATS Ampere Rating	Short Circuit			Ratings When Used With Upstream Fuse (kA)		
	240 V	480 V	600 V	Maximum Fuse Rating	Fuse Type ②	600 V
30	100	65	25	200	J,T	200
70	100	65	25	200	J,T	200
100	100	65	25	200	J,T	200
150	100	65	25	400	J,T	200
200	100	65	25	400	J,T	200
225	100	65	25	400	J,T	200
300	100	65	25	400	J,T	200
400	100	65	25	600	J,T	200
600	100	65 ③	25	800/1200	J,T	100/200
800	65	50 ③	25	1200/1600	L	100/200
1000	65	50 ③	25	1600	L	200

Notes

① All terminals suitable for copper or aluminum conductors. For alternate terminal sizes, contact Eaton.

② Class RK5 fuse with 100 kA rating.

③ Four-pole units rated 35 kA.

Dimensions

Approximate Dimensions in Inches (mm)

30–1000 A Type MTVX—NEMA 1, 3R, 12 ①

Switch Type	Enclosure A Height	B Width	C Depth	Gutter Space D Width	E Depth	F Bending	Bolt Pattern G Horizontal	H Vertical	Standard Terminals ② Line	Load	Neutral	Weight Lb (kg)
HKD (150–225 A)	48.00 (1219.2)	20.81 (528.6)	16.65 (422.9)	8.00 (203.2)	4.00 (101.6)	10.59 (269.0)	11.00 (279.4)	45.50 (1155.7)	(1) #3–350	(1) #6–350	(3) #4–350	305 (138)
HKD (300 A)	56.00 (1422.4)	20.81 (528.6)	16.65 (422.0)	8.00 (203.2)	4.00 (101.6)	13.59 (345.2)	11.00 (279.4)	53.50 (1358.9)	(1) #3–350	(1) #6–350	(3) #4–350	305 (138)
HLD (400 A)	64.00 (1625.6)	25.81 (655.6)	16.65 (422.9)	8.00 (203.2)	4.00 (101.6)	10.54 (267.7)	16.00 (406.4)	61.48 (1561.6)	(1) 4/0–600	(2) #1–500	(6) 250–350	425 (193)
HLD (400 A) ③	53.00 (1346.2)	25.81 (655.6)	16.65 (422.9)	8.00 (203.2)	4.00 (101.6)	11.85 (301.0)	16.00 (406.4)	50.48 (1282.2)	(2) 3/0–350	(2) #1–500	(6) 250–350	425 (193)
HLD (600 A)	64.00 (1625.6)	25.81 (655.6)	16.65 (422.9)	8.00 (203.2)	4.00 (101.6)	10.54 (267.7)	16.00 (406.4)	61.48 (1561.6)	(2) 3/0–350	(2) #1–500	(12) 4/0–500	425 (193)
HLD (600 A) ③	64.00 (1625.6)	25.81 (655.6)	16.65 (422.9)	8.00 (203.2)	4.00 (101.6)	10.54 (267.7)	16.00 (406.4)	61.48 (1561.6)	(2) 400–500	(2) #1–500	(12) 4/0–500	425 (193)
HMDL (600 A)	76.74 (1949.2)	25.81 (655.6)	17.75 (450.8)	8.00 (203.2)	4.00 (101.6)	17.73 (450.3)	16.00 (406.4)	75.15 (1908.8)	(2) #1–500	(2) #1–500	(12) 4/0–500	510 (232)
HMDL (800 A)	76.74 (1949.2)	25.81 (655.6)	17.75 (450.8)	8.00 (203.2)	4.00 (101.6)	17.73 (450.3)	16.00 (406.4)	75.15 (1908.8)	(3) 3/0–400	(3) 3/0–400	(12) 4/0–500	510 (232)
NB (800–1000 A)	76.74 (1949.2)	25.81 (655.6)	17.75 (450.8)	8.00 (203.2)	4.00 (101.6)	17.58 (446.5)	16.00 (406.4)	75.15 (1908.8)	(4) 4/0–500	(4) 4/0–500	(12) 4/0–500	570 (259)

30–150 A Type MTHXFD Manual

Dimensions A	B	C	D	E	F	G	H	Weight Lb (kg)
22.88 (581.2)	13.13 (333.5)	22.74 (577.6)	22.62 (574.5)	24.50 (622.3)	9.78 (248.4)	10.28 (261.1)	32.31 (820.7)	143 (65)

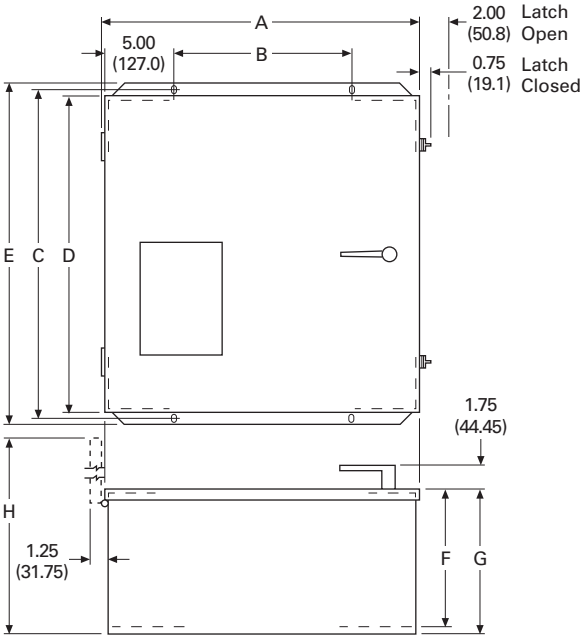

Power Panel and Transformer Panel

Power Panel Type	Height	Width	Depth
Power Panel			
HFD	11.00 (279.4)	17.00 (431.8)	6.81 (173.0)
HKD	24.50 (622.3)	11.88 (301.8)	17.50 (444.5)
HLD	26.00 (660.4)	16.88 (428.8)	17.50 (444.5)
HMDL	36.25 (920.8)	16.88 (428.8)	17.50 (444.5)
NB	36.25 (920.8)	16.88 (428.8)	19.00 (482.6)
Transformer Panel			
HFD	22.00 (558.8)	16.50 (419.1)	6.50 (165.1)
HKD, HLD, HMDL and NB	28.63 (727.2)	8.25 (209.6)	5.50 (139.7)

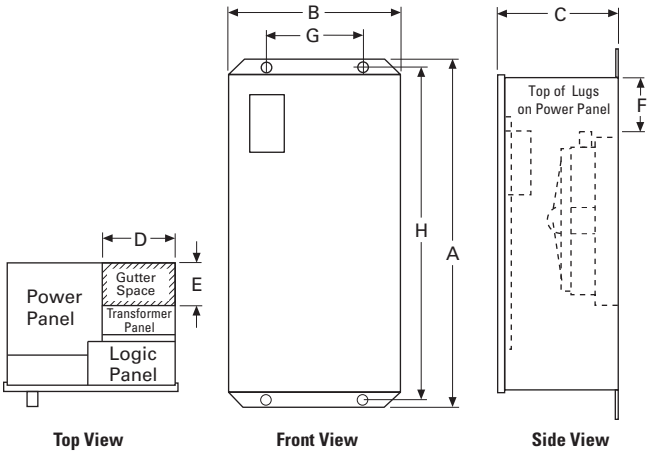

Notes

① Consult factory for NEMA 4X.
② Suitable for Cu or Al wire. Consult the factory for other available terminal sizes.
③ Alternate line terminals.

Dimensions are approximate and should not be used for construction purposes.

Non-Automatic Wallmount

Contents

Description	*Page*
Molded Case Switches—Manual Wallmount, 30–1000 A	**V2-T5-35**
Molded Case Switches—Non-Automatic Wallmount	
Standards and Certifications	**V2-T5-40**
Catalog Number Selection	**V2-T5-40**
Technical Data and Specifications	**V2-T5-40**
Dimensions	**V2-T5-41**
Molded Case Switches—Automatic Wallmount, 30–1000 A	**V2-T5-34**
Maintenance Bypass Switches—Type MBHE 100–1000 A	**V2-T5-48**

Molded Case Switches—Non-Automatic Wallmount, 30–1000 A

Product Description

Eaton's wallmount non-automatic transfer switches are designed for a variety of standby power applications for critical loads.

In the event of a primary power source interruption, the user can manually transfer the load circuits to the standby power source through the use of an external pushbutton. Once primary power has been restored, the user can manually transfer the load circuits back to the primary power source through the use of an external pushbutton.

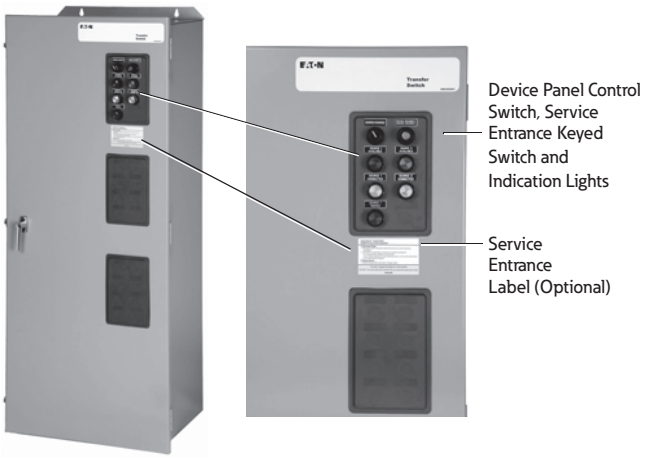

Non-Automatic Switch with Doors Closed

Note: Optional service entrance rating shown for this photo.

Application Description

Non-automatic transfer switches cover applications ranging from 30–1000 A through 600 Vac for manual configurations, open transition, standard or service entrance.

Non-automatic transfer switches are manually initiated, but electrically operated designs. Front door-mounted controls allow the operator to initiate the transfer. Overcurrent trips may be added to the design for either or both the normal and emergency source. Service entrance ratings are available. Note that the Eaton service entrance rated non-automatic transfer switch is a 100% rated and listed to UL 1008 as suitable for use for service entrance.

Features and Benefits

Features

- Molded case switch power contact assemblies
- Positive mechanical and electrical interlocking
- Permanently affixed manual operating handle
- Pushbutton operation

Benefits

- High withstand, totally enclosed for maximum arc suppression and isolation during power transfer
- Optional trip units offer system overcurrent protection
- Prevents the paralleling of two sources of power
- Permits safe and convenient manual transfer of power under load via external pushbutton initiated operation

Non-Automatic Transfer Switch

Device panel shows controls to initiate the manual transfer and control indicating lights. In addition, an optional service entrance rating may be specified. Keyed switch is mounted on the device panel.

Standards and Certifications

- Complies with UL 1008 and UL 489 standards
- IBC seismic qualified

Catalog Number Selection

Non-Automatic Breaker-Based Transfer Switch

NT H E KD C 2 0100 W S U

Type
NT = Non-automatic

Orientation
H = Horizontal
V = Vertical

Logic
E = Electromechanical

Frame
Molded case device
FD = 30–150 A
KD = 150–300 A
LD = 400–600 A
MD = 600–800 A
NB = 800–1000 A

Mounting
Fixed
A = FM, N (MCS), E (MCS)
B = FM, N (MCB), E (MCB)
C = FM, N (MCB), E (MCS)
D = FM, N (MCS), E (MCB)

Number of Poles
2 = Two-pole
3 = Three-pole
4 = Four-pole

Amperes
0030 = 30 A
0070 = 70 A
0100 = 100 A
0150 = 150 A
0225 = 225 A
0300 = 300 A
0400 = 400 A
0600 = 600 A
0800 = 800 A
1000 = 1000 A

Voltage
B = 208 V, 60 Hz
E = 600 V, 60 Hz
G = 220 V, 50/60 Hz
H = 380 V, 50 Hz
K = 600 V, 50 Hz
O = 415 V, 50 Hz
W = 240 V, 60 Hz
X = 480 V, 60 Hz
Z = 365 V, 50 Hz

Enclosure
K = Open
S = NEMA 1
R = NEMA 3R
J = NEMA 12
D = NEMA 4X

Certification
U = UL 1008 listed
R = UL recognized
X = No listing

Technical Data and Specifications

Wallmount Transfer Switch Standard Terminal Data for Power Cable Connections ①

Switch Ampere Rating	Breaker Frame	Line Side (Normal and Standby Source)	Load Connection	Neutral Connection
30–100	HFD	(1) #14–1/0	(1) #14–1/0	(3) #14–1/0
150–225	HFD	(1) #6–300	(1) #6–300	(3) #4–300
225–300	HKD	(1) #3–350	(1) #6–350	(3) #4–350
400	HLD	(1) 4/0–600	(2) #1–500	(6) 250–350
600	HLD	(1) 3/0–350	(2) #1–500	(6) 250–350
600	HMDL	(2) #1–500	(2) #1–500	(12) 4/0–500
600 (four-pole)	NB	(3) 3/0–400	(3) 3/0–400	(3) 3/0–400
800	HMDL	(3) 3/0–400	(3) 3/0–400	(12) 4/0–500
800	HNB	(4) 4/0–500	(4) 4/0–500	(12) 4/0–500
1000	HNB	(4) 4/0–500	(4) 4/0–500	(12) 4/0–500

UL 1008 Short Circuit Withstand and Close-On Ratings (kA)

Standard UL 1008 Three-Cycle—Horizontal and Vertical Industrial

ATS Ampere Rating	Short Circuit			Ratings When Used with Upstream Fuse (kA)		
	240 V	480 V	600 V	Maximum Fuse Rating	Fuse Type ②	600 V
30	100	65	25	200	J, T	200
70	100	65	25	200	J, T	200
100	100	65	25	200	J, T	200
150	100	65	25	400	J, T	200
200	100	65	25	400	J, T	200
225	100	65	25	400	J, T	200
300	100	65	25	400	J, T	200
400	100	65	25	600	J, T	200
600	100	65 ③	25	800/1200	J, T	100/200
800	65	50 ③	25	1200/1600	L	100/200
1000	65	50 ③	25	1600	L	200

Notes

① All terminals suitable for copper or aluminum conductors. For alternate terminal sizes, contact Eaton.
② Class RK5 fuse with 100 kA rating.
③ Four-pole units rated 35 kA.

Dimensions

Approximate Dimensions in Inches (mm)

30–1000 A Types NTHE, NTVE—NEMA 1, 3R 12 ①

Switch Type	Enclosure A Height	B Width	C Depth	Gutter Space D Width	E Depth	F Bending	Bolt Pattern G Horizontal	H Vertical	Standard Terminals ② Line	Load	Neutral	Weight Lb (kg)
HFD (30–100 A) ③	47.74 (1213.0)	20.81 (528.6)	15.22 (386.6)	8.00 (203.2)	4.00 (101.6)	6.22 (157.9)	10.75 (273.0)	45.24 (1049.1)	(1) #14–1/0	(1) #14–1/0	(3) #14–1/0	232 (105)
HFD (150 A) ③	47.74 (1213.0)	20.81 (528.6)	15.22 (386.6)	8.00 (203.2)	4.00 (101.6)	6.22 (157.9)	10.75 (273.0)	45.24 (1049.1)	(1) #6–300	(1) #6–300	(3) #4–300	232 (105)
HKD (150–225 A)	48.00 (1219.2)	20.81 (528.6)	16.65 (422.9)	8.00 (203.2)	4.00 (101.6)	10.59 (269.0)	11.00 (279.4)	45.50 (1155.7)	(1) #3–350	(1) #6–350	(3) #4–350	305 (138)
HKD (300 A)	56.00 (1422.4)	20.81 (528.6)	16.65 (422.9)	8.00 (203.2)	4.00 (101.6)	13.59 (345.2)	11.00 (279.4)	53.50 (1358.9)	(1) #3–350	(1) #6–350	(3) #4–350	305 (138)
HLD (400 A)	64.00 (1625.6)	25.81 (655.6)	16.65 (422.9)	8.00 (203.2)	4.00 (101.6)	10.54 (267.7)	16.00 (406.4)	61.48 (1561.6)	(1) 4/0–600	(2) #1–500	(6) 250–350	425 (193)
HLD (400 A) ④	53.00 (1346.2)	25.81 (655.6)	16.65 (422.9)	8.00 (203.2)	4.00 (101.6)	11.85 (301.0)	16.00 (406.4)	50.48 (1282.2)	(2) 3/0–350	(2) #1–500	(6) 250–350	425 (193)
HLD (600 A)	64.00 (1625.6)	25.81 (655.6)	16.65 (422.9)	8.00 (203.2)	4.00 (101.6)	10.54 (267.7)	16.00 (406.4)	61.48 (1561.6)	(2) 3/0–350	(2) #1–500	(12) 4/0–500	425 (193)
HLD (600 A) ④	64.00 (1625.6)	25.81 (655.6)	16.65 (422.9)	8.00 (203.2)	4.00 (101.6)	10.54 (267.7)	16.00 (406.4)	61.48 (1561.6)	(2) 400–500	(2) #1–500	(12) 4/0–500	425 (193)
HMDL (600 A)	76.74 (1949.2)	25.81 (655.6)	17.75 (450.8)	8.00 (203.2)	4.00 (101.6)	17.73 (450.3)	16.00 (406.4)	75.15 (1908.8)	(2) #1–500	(2) #1–500	(12) 4/0–500	510 (232)
HMDL (800 A)	76.74 (1949.2)	25.81 (655.6)	17.75 (450.8)	8.00 (203.2)	4.00 (101.6)	17.73 (450.3)	16.00 (406.4)	75.15 (1908.8)	(3) 3/0–400	(3) 3/0–400	(12) 4/0–500	510 (232)
NB (800–1000 A)	76.74 (1949.2)	25.81 (655.6)	17.75 (450.8)	8.00 (203.2)	4.00 (101.6)	17.58 (446.5)	16.00 (406.4)	75.15 (1908.8)	(4) 4/0–500	(4) 4/0–500	(12) 4/0–500	570 (259)

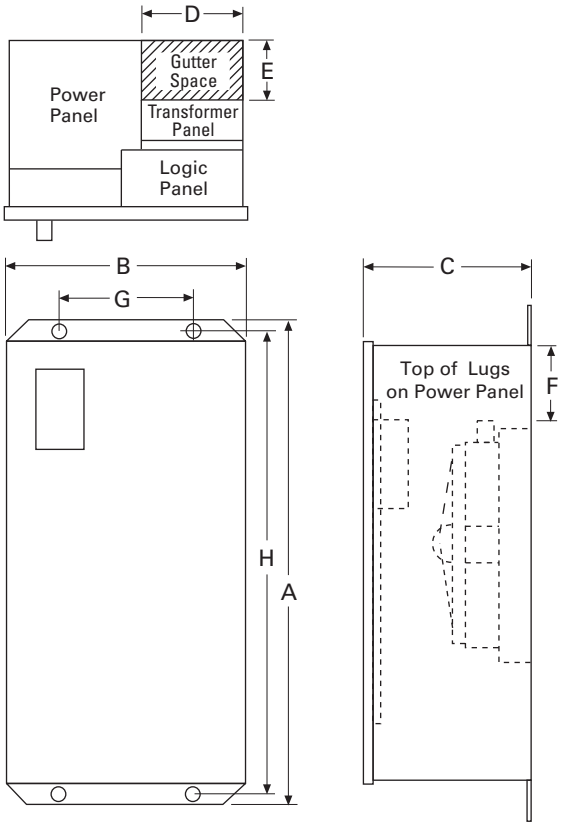

Front View

Side View

Power Panel and Transformer Panel

Power Panel Type	Height	Width	Depth
Power Panel			
HFD	11.00 (279.4)	17.00 (431.8)	6.81 (173.0)
HKD	24.50 (622.3)	11.88 (301.8)	17.50 (444.5)
HLD	26.00 (660.4)	16.88 (428.8)	17.50 (444.5)
HMDL	36.25 (920.8)	16.88 (428.8)	17.50 (444.5)
NB	36.25 (920.8)	16.88 (428.8)	19.00 (482.6)
Transformer Panel			
HFD	22.00 (558.8)	16.50 (419.1)	6.50 (165.1)
HKD, HLD, HMDL and NB	28.63 (727.2)	8.25 (209.6)	5.50 (139.7)

Notes

① Consult factory for NEMA 4X.
② Suitable for Cu or Al wire. Consult the factory for other available terminal sizes.
③ NTHE with multi-tap voltage selection panel.
④ Alternate line terminals.

Automatic Wallmount

Contents

Description	*Page*
Molded Case Switches—Manual Wallmount, 30–1000 A	**V2-T5-35**
Molded Case Switches—Non-Automatic Wallmount	**V2-T5-39**
Molded Case Switches—Automatic Wallmount, 30–1000 A	
Standards and Certifications	**V2-T5-45**
Catalog Number Selection	**V2-T5-45**
Technical Data and Specifications	**V2-T5-46**
Dimensions	**V2-T5-47**
Maintenance Bypass Switches—Type MBHE 100–1000 A	**V2-T5-48**

Molded Case Switches—Automatic Wallmount, 30–1000 A

Product Description

Eaton's wallmount transfer switches are designed for a variety of standby power applications for critical loads. They provide flexibility, reliability and value in a compact package. In the event of a primary power source interruption, a transfer switch provides an effective means to transfer the load circuits to an alternate power source while reducing the possibility of injury or property damage.

Wallmount transfer switches meet or exceed all industry standards for endurance, reliability and performance.

These breaker-based designs can be applied with the ATC-100, ATC-300+ or ATC-900 controllers.

Application Description

Suitable for emergency and standby systems (all loads).

Features, Benefits and Functions

Industrial Design Highlights

- Double-throw, mechanically interlocked transfer mechanism
- High withstand and closing ratings
- Seismic qualified (BOCA®, CBC, IBC, UBC)

Standard Features

- Auxiliary relay contacts:
  - Source 1 present 2NO and 2NC
  - Source 2 present 2NO and 2NC
- Switch position indication contacts:
  - Source 1 position 1NO and 1NC
  - Source 2 position 1NO and 1NC
- Source 1 and Source 2 sensing:
  - Undervoltage/ underfrequency
  - Overvoltage/ overfrequency
  - Three-phase rotation protection
  - Three-phase voltage unbalance/loss
- Pretransfer signal contacts 1NO/1NC
- Go to emergency (Source 2)
- Seven field-programmable time delays
- LCD-based display for programming, system diagnostic and Help message display
- Mimic diagram with source available and connected LED indication
- Time-stamped history log
- System TEST pushbutton
- Programmable plant exerciser—OFF, daily, 7-, 14-, 28-day interval selectable run time 0–600 minutes no load/ load with fail-safe
- Safe manual operation under full load with permanently affixed operating handle

Optional Features

- Suitable for use as service equipment in the standard enclosure size, 100% rated and listed to UL 1008
- Available SPD for power/ controller, engine start circuit, phone and cable connections
- Integrated distribution panels
- Field-selectable multi-tap transformer panel permits operation on a wide range of system voltages
- Integral overcurrent protection
- Not available on contactor transfer switch
- Space heater with thermostat
- Ammeter—load side
- Stainless steel cover for controller
- ATC-100 and ATC-900 controllers available
- Modbus RTU via RS-485
- Source 2 inhibit
- Manual retransfer to normal
- Remote annunciator with control
- Ethernet communication (PXG 400 Gateway)

Basic Components of Automatic Transfer Switches

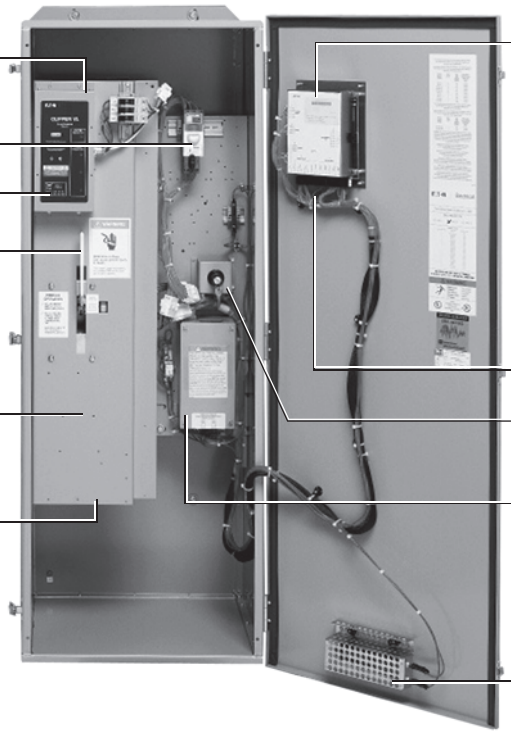

Eaton's Superior Design Transfer Switch Characteristics

Unmatched Performance and Versatility

Eaton's family of wallmount transfer switches offers unmatched performance, versatility and value for power switching applications. At the heart of these designs is Eaton's molded case switch, designed specifically to meet UL 1008.

Superior Main Contact Structure

All Eaton wallmount transfer switches meet or exceed the standards set forth in UL 1008 and UL 489. No other transfer switch manufacturer has met the rigid testing requirements of this combination of standards. Completely enclosed contacts add a measure of safety and reliability. It also ensures the integrity of the contact assemblies and minimizes the need for periodic maintenance of the contacts, reducing downtime.

Fast, Powerful and Safe Power Switching Mechanism

The power panel utilizes a unidirectional gear motor mechanism. The power panel can be operated manually under a FULL LOAD.

Molded Case Switch Features

- True four-pole switched neutral availability
- Totally enclosed contact assembly

Molded Case Switch

Optional Integral Overcurrent Protection Capability

For service entrance and other applications, trip units can be integrated into the power switching section. This eliminates the need for separate upstream protective devices, saving cost and space.

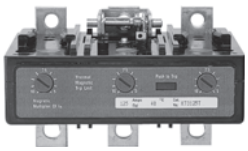

Optional Thermal-Magnetic or Electronic Trip Units

Optional Service Entrance Rated Automatic Transfer Switch

Eaton's service entrance rated molded case breaker design is a 100% rated ATS and UL 1008 Listed.

Mechanical Interlock

Wallmount transfer switches feature a rear-mounted, fail-safe mechanical interlock to prevent paralleling of sources. This is, in addition to software interlocking and the interlocking inherently provided by the transfer mechanism.

Triple Interlocks

Load Bus Assembly

The load bus can be oriented for either top or bottom access. Top entry is standard.

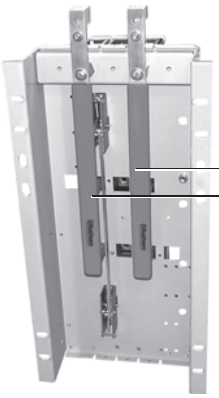

Load Bus

Multi-Tap Voltage Selector

Eaton's industry-exclusive Multi-Tap system voltage selector allows our transfer switch to be applied on most system voltages just by proper insertion of the selector plug. Available in two configurations: Worldwide Multi-Tap with 600, 480, 415, 380, 240, 220 and 208 Vac, single- and three-phase, 50 and 60 Hz taps. North American Multi-Tap with 600, 480, 240, 208 and 120 Vac, single- and three-phase, 60 Hz taps.

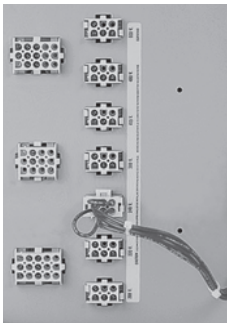

Multi-Tap Voltage Selector

Ease of Maintenance

Keyed quick-disconnect plugs are provided for easy and complete isolation of the control circuitry.

Maintenance can be performed on the logic independent from the power sections and still allow the user to manually transfer power under full load conditions.

Logic Disconnect Plugs

North American Voltage Selector

North American multi-tap transformer comes with 600, 480, 240, 208 and 120 Vac, single- and three-phase, and 60 Hz taps, which are all field selectable. Simply remove the steel cover and move the appropriate blue flag terminal to the desired voltage. All switches are shipped with the blue flag in the 600 V position.

Transformer Panel Location

Transformer Panel Opened

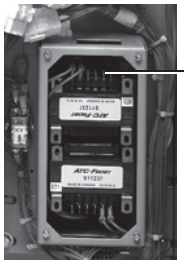

Typical (225–1000 A) Vertical Design Transfer Switch Equipment

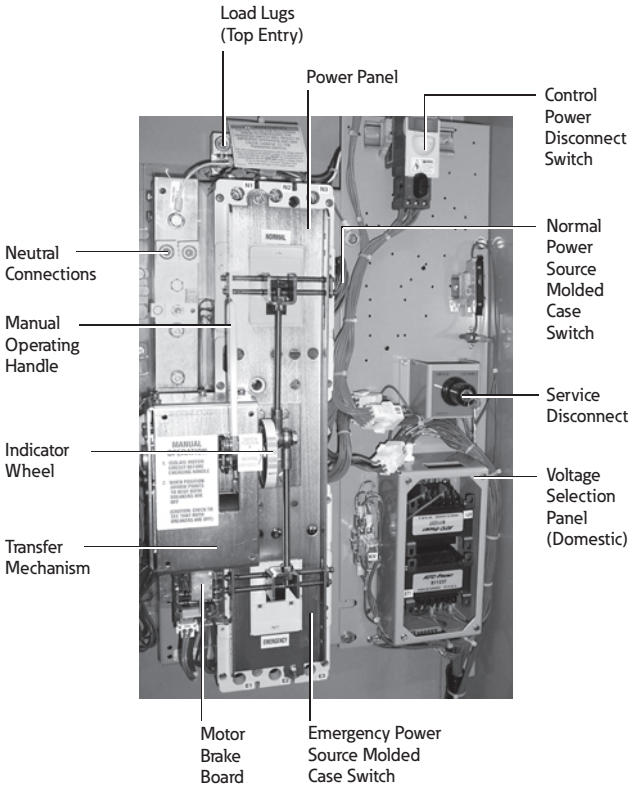

Shown Without the Deadfront

Standards and Certifications

They are listed under Underwriters Laboratories UL 1008 Standard for transfer switch equipment and are optionally available as suitable for emergency and standby systems as defined in NFPA 99 for healthcare facilities.

- UL 1008 listed
- CSA C22.2 No. 178 certified

Listed

Catalog Number Selection

Molded Case Transfer Switch

AT V 3 KD A 3 0400 X S U

Type
AT = Automatic

Orientation
H = Horizontal
V = Vertical
C = Contactor

Logic
1 = ATC-100
3 = ATC-300+
9 = ATC-900

Frame Size (Amperes)
Molded case device ①
FD = 30–150
KD = 225–300
LD = 400
MD = 600 (three-pole only)
NB = 800–1000 ②

Switch ③
A = S1 (MCS) S2 (MCS)
B = S1 (MCB) S2 (MCB)
C = S1 (MCB) S2 (MCS)
D = S1 (MCS) S2 (MCB)
X = Fix mounted contactor

Number of Poles
2 = Two-pole
3 = Three-pole
4 = Four-pole ②

Amperes
0030 = 30 A
0070 = 70 A
0100 = 100 A
0150 = 150 A
0200 = 200 A
0225 = 225 A
0300 = 300 A
0320 = 320 A
0400 = 400 A
0600 = 600 A ②
0800 = 800 A
1000 = 1000 A

Voltage
B = 208 V, 60 Hz
E = 600 V, 60 Hz
G = 220 V, 50/60 Hz
H = 380 V, 50 Hz
K = 600 V, 50 Hz
O = 415 V, 50 Hz
W = 240 V, 60 Hz
X = 480 V, 60 Hz

Enclosure
K = Open
S = NEMA 1
J = NEMA 12
R = NEMA 3R
D = NEMA 4X

Certification
U = UL listed
R = UL recognized
X = No listing

Notes

① HFD = 200 and 225 A, HLD = 600 A, HMD = 800 A for 240/120 Vac single-phase, three-wire and 208Y/120 Vac three-phase, four-wire systems only.
② Four-pole 600 A will use an NB breaker.
③ MCB = Molded Case Breaker, MCS = Molded Case Switch.

Technical Data and Specifications

Electrical Ratings

- Molded case and circuit breaker 30–1000 A
- Two-, three- or four-pole
- Up to 600 Vac, 50/60 Hz
- NEMA 1, 3R, 4X, 12, open

Molded Case Transfer Switch and Circuit Breaker

UL 1008 Short Circuit Withstand and Close-On Ratings (kA)

Switch Ampere Rating	Short Circuit			Ratings When Used with Upstream Fuse		
	240 Vac	480 Vac	600 Vac	Maximum Fuse Rating	Fuse Type	600 Vac
30–100	100	65	25	200	J, T	200
150	100	65	25	400	J, T	200
225	100	65	25	400	J, T	200
300	100	65	25	400	J, T	200
400	100	65	25	600	J, T	200
600	100	65 ①	25	800/1200	J, T	100/200
800	65	50 ①	25	1200/1600	L	100/200
1000	65	50 ①	25	1600	L	200

Wallmount Transfer Switch Standard Terminal Data for Power Cable Connections ②

Switch Ampere Rating	Breaker Frame	Line Side (Normal and Standby Source)	Load Connection	Neutral Connection
30–100	HFD	(1) #14–1/0	(1) #14–1/0	(3) #14–1/0
150–225	HFD	(1) #6–300	(1) #6–300	(3) #4–300
150–225	HKD	(1) #3–350	(1) #6–350	(3) #4–350
225–300	HKD	(1) #3–350	(1) #6–350	(3) #4–350
400	HLD	(1) 4/0–600	(2) #1–500	(6) 250–350
600	HLD	(1) 3/0–350	(2) #1–500	(6) 250–350
600	HMDL	(2) #1–500	(2) #1–500	(12) 4/0–500
600 (four-pole)	NB	(3) 3/0–400	(3) 3/0–400	(3) 3/0–400
800	HMDL	(3) 3/0–400	(3) 3/0–400	(12) 4/0–500
800	HNB	(4) 4/0–500	(4) 4/0–500	(12) 4/0–500
1000	HNB	(4) 4/0–500	(4) 4/0–500	(12) 4/0–500

Notes

① For 600, 800 and 1000 A ratings, four-pole units are rated 35 kA at 480 volts.

② All terminals suitable for copper or aluminum conductors. For alternate terminal sizes, contact Eaton.

Dimensions

Approximate Dimensions in Inches (mm)

Dimension Views

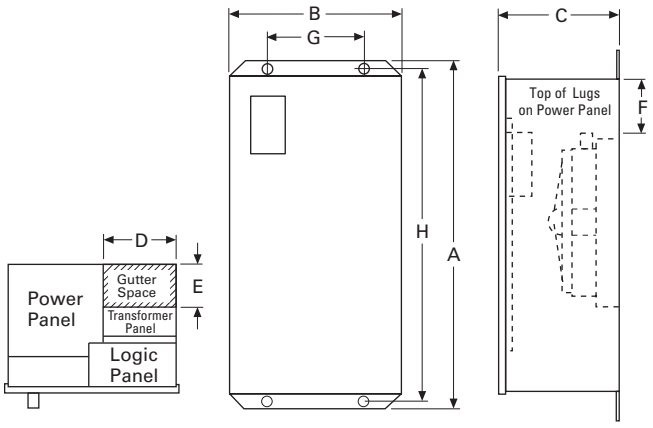

Top View **Front View** **Side View**

Breaker-Based and Molded Case Transfer Switches—NEMA 1, 3R, 12 ①

Switch Rating Amperes	Switch Type	Enclosure A Height	B Width	C Depth	Gutter Space D Width	E Depth	Bolt Pattern G Horizontal	H Vertical	Standard Terminals ② Line Side (Normal Load and Standby Source) Connection	Neutral Connection	Weight Lb (kg)
Molded Case											
30–100	HFD ③	47.74 (1213.0)	20.81 (528.6)	15.22 (386.6)	8.00 (203.2)	4.00 (101.6)	10.75 (273.0)	46.44 (1180.0)	—	—	—	232 (105)
150–225	HFD ③	47.74 (1213.0)	20.81 (528.6)	15.22 (386.6)	8.00 (203.2)	4.00 (101.6)	10.75 (273.0)	46.44 (1180.0)	—	—	—	232 (105)
30–100	HFD ④	47.74 (1213.0)	20.81 (528.6)	15.22 (386.6)	8.00 (203.2)	4.00 (101.6)	10.75 (273.0)	46.44 (1180.0)	—	—	—	232 (105)
150	HFD ④	47.74 (1213.0)	20.81 (528.6)	15.22 (386.6)	8.00 (203.2)	4.00 (101.6)	10.75 (273.0)	46.44 (1180.0)	—	—	—	232 (105)
150–225	HFD ③	35.61 (904.0)	20.06 (509.5)	11.34 (288.0)	8.00 (203.2)	4.00 (101.6)	10.75 (273.0)	34.31 (904.0)	—	—	—	150 (68)
150–225	HKD	56.00 (1422.4)	20.81 (528.6)	16.65 (422.9)	8.00 (203.2)	4.00 (101.6)	11.00 (279.4)	45.50 (1155.7)	—	—	—	305 (134)
300	HKD	53.00 (1346.2)	25.81 (655.6)	16.65 (422.9)	8.00 (203.2)	4.00 (101.6)	16.00 (406.4)	53.50 (1358.9)	—	—	—	295 (134)
400	HLD	64.00 (1625.6)	25.81 (655.6)	16.65 (422.9)	8.00 (203.2)	4.00 (101.6)	16.00 (406.4)	61.48 (1561.6)	—	—	—	425 (193)
400	HLD ③	53.00 (1346.0)	25.81 (655.6)	16.65 (422.9)	8.00 (203.2)	4.00 (101.6)	16.00 (406.4)	51.50 (1308.0)	—	—	—	425 (193)
600	HLD	64.00 (1625.6)	25.81 (655.6)	16.65 (422.9)	8.00 (203.2)	4.00 (101.6)	16.00 (406.4)	62.50 (1588.0)	—	—	—	475 (214)
600	HMDL	76.74 (1949.2)	25.81 (655.6)	17.75 (450.8)	8.00 (203.2)	4.00 (101.6)	16.00 (406.4)	75.15 (1908.8)	—	—	—	480 (218)
800	HMDL ③	76.74 (1949.2)	25.81 (655.6)	17.75 (450.8)	8.00 (203.2)	4.00 (101.6)	16.00 (406.4)	75.15 (1908.8)	—	—	—	510 (232)
800–1000	HNB	76.74 (1949.2)	25.81 (655.6)	17.75 (450.8)	8.00 (203.2)	4.00 (101.6)	16.00 (406.4)	75.15 (1908.8)	—	—	—	570 (259)

Notes

① Consult factory for NEMA 4X.
② Suitable with copper only.
③ Alternate line terminals.
④ With multi-tap voltage selection panel.

Type MBHE Maintenance Bypass Switch

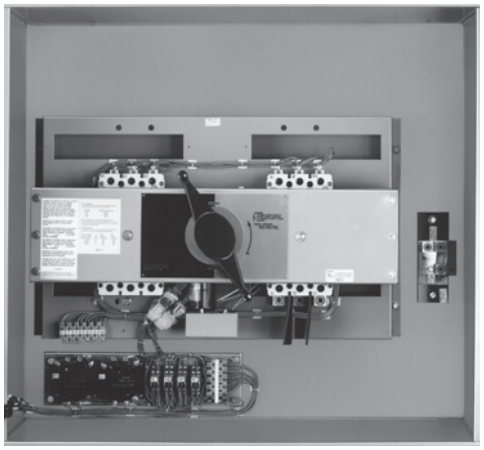

Contents

Description	*Page*
Molded Case Switches—Manual Wallmount, 30–1000 A	**V2-T5-35**
Molded Case Switches—Non-Automatic Wallmount	**V2-T5-39**
Molded Case Switches—Automatic Wallmount, 30–1000 A	**V2-T5-42**
Maintenance Bypass Switches—Type MBHE 100–1000 A	
Catalog Number Selection	**V2-T5-49**
Technical Data and Specifications	**V2-T5-49**
Dimensions	**V2-T5-50**

Maintenance Bypass Switches—Type MBHE 100–1000 A

Product Description

Eaton's maintenance bypass switch is a UL 1008-listed device that provides a simple and effective means for bypassing un-interruptible power supplies while maintaining continuity of power to the critical computer loads. A maintenance bypass switch is a requirement on every UPS installation in order to accommodate the maintenance and testing of the UPS system.

Features and Benefits

- Make-before-break electrical operation
- Lockout circuit to be wired into the UPS bypass authorization
- Pilot devices to show UPS position "Normal" and "Bypassed"
- Pilot device to show "Lockout" enabled
- Reliable manually initiated electrical operation
- High interrupting ratings are standard
- Molded case switch designs are available
- Solid neutral connections are standard
- Safe and reliable operation is ensured due to the simple and durable switching design
- Unauthorized bypass is prevented by the need of UPS system to send the bypass authorized signal
- 100% current ratings makes selection to the UPS kVA ratings easy to accomplish
- Use of interrupting rating switches makes the maintenance bypass switches adaptable to systems with high levels of available fault current

Standards and Certifications

- UL 1008 listing—File E61639

Listed

Diagram

Single Line Diagram of Maintenance Bypass Switch

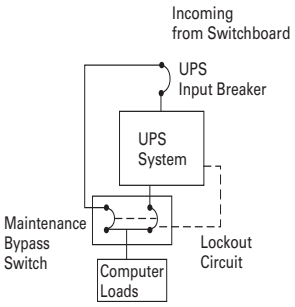

Catalog Number Selection

Transfer Switch Equipment

MB H E FD A 3 0030 A S U

Type
MB = Maintenance Bypass

Orientation
H = Horizontal

Logic
E = Electromechanical

Frame Size (Amperes)
Molded case
FD = HFD (100 A, 150 A)
KD = HKD (150 A, 225 A, 300 A)
LD = HLD (400 A)
NB = NB (600 A, 1000 A)

Switch
A = Fix mounted, molded case switch (MCS) both

Number of Poles
2 = Two-pole
3 = Three-pole
4 = Four-pole

Amperes
0100 = 100 A
0150 = 150 A
0225 = 225 A
0300 = 300 A
0400 = 400 A
0600 = 600 A
0800 = 800 A
1000 = 1000 A

Voltage
A = 120 V, 60 Hz
B = 208 V, 60 Hz
W = 240 V, 60 Hz
X = 480 V, 60 Hz

Enclosure
K = Open
S = NEMA 1
J = NEMA 12
R = NEMA 3R
D = NEMA 4X

Certification
U = UL listed

Technical Data and Specifications

Maintenance Bypass Switch

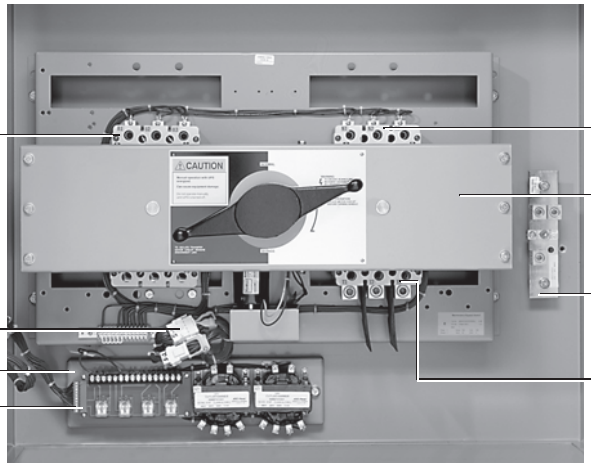

Standard Withstand, Closing and Interrupting Ratings ①

Transfer Switch Ampere Rating	Rating When Used with Upstream Circuit Breaker: Suggested Breaker Rating ②	240 V	480 V	Rating When Used with Upstream Fuse: Maximum Fuse Rating	Fuse Type	480 V
100	100	100	65	200	J, T	200
150	150	100	65	400	J, T	200
225	225	100	65	400	J, T	200
300	300	100	65	400	J, T ③	200
400	400	65	35	600	J, T	200
600	600	65	50 ④	800/1200	J, T	100/200
800	800	65	50 ④	1200/1600	L	100/200
1000	1000	65	50 ④	1600	L	200

Notes

① Tested in accordance with UL 1008.
② For maximum breaker rating in circuits where the transfer switch is evaluated as a "motor branch circuit conductor" refer to the NEC Section 430.25 for sizing.
③ Also can use Class RK5 fuse with 100 kA rating.
④ Four-pole units rated 35 kA.

To attain the maximum rating shown in the chart, when protected by an upstream breaker, the upstream device must have an equivalent interrupting rating.

Dimensions

Approximate Dimensions in Inches (mm)

Manual Transfer and Maintenance Bypass Switches—100–150 A Type MTHXFD Manual /100–1000 A Type MBHE Maintenance Bypass

Manual and Maintenance Bypass Enclosures

	Dimensions					
Amperes	**A**	**B**	**C**	**E**	**G**	**H**
100–150	22.88 (581.2)	13.13 (333.5)	22.74 (577.6)	24.50 (622.3)	10.28 (261.1)	32.31 (820.7)
225–300	38.88 (987.6)	29.13 (739.9)	35.74 (907.8)	37.50 (952.5)	17.78 (438.9)	55.81 (1417.6)
400	38.88 (987.6)	29.13 (739.9)	35.74 (907.8)	37.50 (952.5)	17.78 (438.9)	55.81 (1417.6)
600	38.88 (987.6)	29.13 (739.9)	49.74 (1263.4)	51.50 (1308.1)	17.78 (438.9)	55.81 (1417.6)
800	38.88 (987.6)	29.13 (739.9)	49.74 (1263.4)	51.50 (1308.1)	17.78 (438.9)	55.81 (1417.6)
1000	38.88 (987.6)	29.13 (739.9)	59.74 (1517.4)	61.50 (1562.1)	17.78 (438.9)	55.81 (1417.6)

Manual and Maintenance Bypass Switches

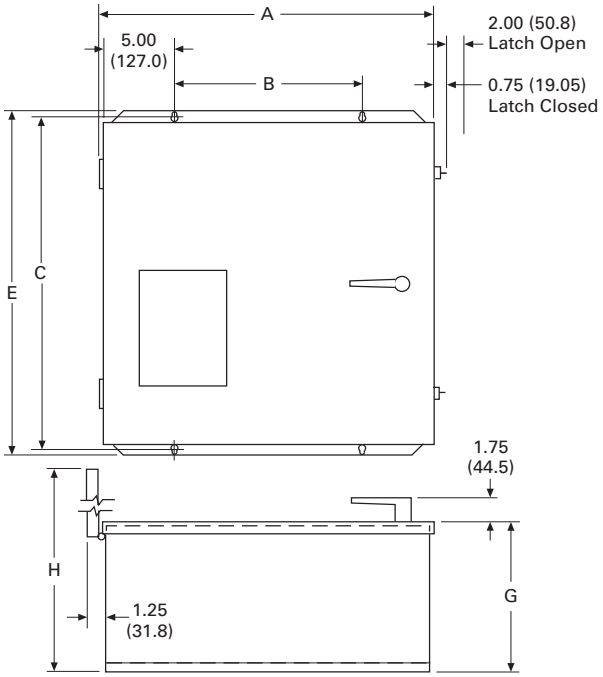

Floor-Standing Magnum Transfer Switch

Contents

Description	*Page*
Power Case Switch—Floorstanding, 200–5000 A	
Features, Benefits and Functions	**V2-T5-52**
Product Selection	**V2-T5-55**
Catalog Number Selection	**V2-T5-55**
Standards and Certifications	**V2-T5-56**
Technical Data and Specifications	**V2-T5-56**
Dimensions	**V2-T5-57**
Bypass Isolation Transfer Switch, 200–5000 A	**V2-T5-60**

Power Case Switch—Floorstanding, 200–5000 A

Product Description

Eaton's Magnum transfer switches are designed for a variety of standby power applications for critical and noncritical loads. They monitor both Source 1 (Normal) and Source 2 (Emergency) power sources. In the event of a Source 1 power interruption, these switches will automatically transfer the load circuits to the Source 2 power source. Once Source 1 power source has been restored, the process is automatically reversed.

Application Description

The Magnum family of transfer switches covers applications ranging from 200 to 5000 A through 600 Vac. Some of the applications are: automatic or non-automatic configurations, open or closed transition and standard or rated suitable for use as service entrance. They are designed for applications where total system coordination must be accomplished while achieving a high level of Withstand, Interrupting, and Closing performance.

Drawout construction is available for applications, such as critical life-support systems, where preventive maintenance, inspection and testing must be accomplished while maintaining continuity of power to the load.

Automatic Transfer
Open Transition
Open transition type Magnum transfer switches use the Eaton programmable ATC-900 microprocessor-based logic controller.

Automatic Transfer
Closed Transition
Closed transition applications feature the ATC-900 closed transition logic controller.

Features, Benefits and Functions

Industrial Design Highlights

- Freestanding enclosure
- High withstand ratings
  - 100 kA standard 3-cycle rating
  - 85 kA standard 30-cycle rating
- Dual drawout on ATS and bypass
- Deadfront
- Safe manual transfer under load
- Electrically operated
- Magnum stored energy mechanism
- Quick make / quick break—switching times (<3 cycles)
- Multi-tap transformer
- True four-pole switched neutral
- Mechanically interlocked
- Integral overcurrent trip option
- Integrated service entrance rating option 100% rated per UL 1008
- OSHPD listed

Standard Features

- ATC-900 controller
- Drawout cassette on ATS and bypass
- Source available contacts:
  - Source 1 available 1NO/1NC
  - Source 2 available 1NO/1NC
- Switch position contacts:
  - Source 1 position 1NO/1NC
  - Source 2 position 1NO/1NC
- Source 1 and Source 2 sensing:
  - Undervoltage/ underfrequency
  - Overvoltage/ overfrequency
- Field-programmable time delays
  - Time delay engine start
  - Time delay normal to emergency
  - Time emergency to normal
  - Time delay engine cooldown
  - Time delay emergency failure
- LCD color-based display for programming, system diagnostics and Help menu
- Mimic diagram with source available and connected LED indication
- Four programmable inputs and outputs
- Standard Modbus 485
- USB port for set point downloads and event recording uploads
- Password-protected access to control functions and set point programming
- Two automatic plant exercisers—load or no load, daily, 7-, 14-, 28-day or calendar date operation, 0–600 minute runtime

Optional Features

- Available UL 1449 Third Edition surge protection device (SPD)
- Automatic transfer operation with selectable (via programming) nonautomatic or automatic retransfer with fail-safe
- Space heater with thermostat
- Digital multi-function power quality metering
- DC power input for uninterrupted monitoring of ATS status
- Integrated load metering
- Expandable I/O (up to 20 I/O total)
- EtherNet TCP/IP communications
- Integrated service entrance option with 100% rated per UL 1008
- Optional remote annunciator

Unmatched Performance and Versatility
The Eaton family of Magnum transfer switches offers unmatched performance, versatility and value for standby power applications. At the heart of these designs is the Magnum switch with the following features:

Superior Main Contact Structure
All Eaton Magnum Transfer Switches meet or exceed the standards set forth in UL 1008 and UL 489 with high withstand, totally enclosed Magnum switches. No other transfer switch manufacturer has met the rigid testing requirements of this combination of standards. Completely enclosed contacts add a measure of safety and reliability. They also ensure the integrity of the contact assemblies and minimize the need for periodic maintenance of the contacts, reducing downtime and maintenance time.

Fast, Powerful and Safe Switching Mechanism
The mechanism uses a high speed less than or equal to a 3-cycle stored energy switching mechanism. This mechanism can be operated manually under a FULL LOAD.

Ease of Coordination and Application—Short-Time Withstand
The use of electronic trips has allowed performance curve shaping to facilitate proper system coordination. The most significant is the "short time" rated trip unit. These trip settings may be set for what are considered extremely high currents for much longer durations than the three-cycle withstand test required under UL 1008. To facilitate improved coordination, Eaton Magnum transfer switches have been tested and are provided with 30-cycle, extended withstand ratings.

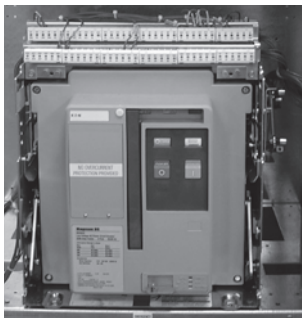

Magnum Power Case Switch

Optional Integral Overcurrent Protection Capability

Optional Digitrip™ Magnum Trip Unit

UL 1008 100% Rated Service Entrance
For service entrance and other applications, Digitrip solid-state trip units can be integrated into the power switching section. This eliminates the need for separate upstream protective devices, saving cost and space. Available with various combinations of long, short time, instantaneous, ground fault protection and communication. Overcurrent trip selection can be made from the series of Eaton Digitrip RMS trip units including the standard Digitrip 520 or optional 520M, 520MC or 1150.

Controller Logic
The ATC-900 Automatic Transfer Switch Controller from Eaton is a comprehensive, multi-function, microprocessor-based automatic transfer switch controller and meter. It is designed to accurately monitor power sources and provide the necessary intelligence to reliably operate a transfer switch through a series of programmed sensing and timing functions. The ATC-900 provides an unmatched degree of programming flexibility to address the needs of any system.

Controller Primary Functions
The ATC-900 Automatic Transfer Switch Controller offers these standard features:

- Monitor normal and emergency source voltages and frequencies
- Provide transfer and re-transfer control signals
- Provide engine/generator starting and shutdown signals
- Permit customer programming of operational set points
- Display real-time and historical information
- Permit system testing
- Store customer and factory-established parameters in nonvolatile memory
- Provide faceplate source status indication
- Provides an LCD-based display for programming and status readout

Controller Flexible Configurations
The ATC-900 controller includes four programmable inputs and outputs as a standard offering. The inputs and outputs can be assigned functions from a preset list of options, either at the factory or in the field. Additional I/O can be added at any time by adding an external I/O module. Each I/O module contains four inputs and outputs, and up to four modules can be daisy chained to the ATC-900 controller.

Controller Diagnostics and Troubleshooting
Eaton's ATC-900 controller provides users with data required to quickly identify the root cause of a backup power system failure and minimize system downtime. With the DCT module, the ATC-900 stores 4 seconds of metered data every 20 msec for certain events. The data is captured 2 seconds before and 2 seconds after the event (except for a power failure, which is 4 seconds before). Oscillographic data for 10 events is stored in the controller and may be downloaded over USB or displayed graphically.

Controller Communications
Every ATC-900 controller includes a standard Modbus RTU communications interface with an option to upgrade to Modbus TCP/IP.

The ATC-900 is also compatible with Eaton's Power Xpert Gateway for web-based monitoring, Modbus TCP/IP, SNMP or BACnet®/IP. The Power Xpert Gateway can be used to consolidate data from up to 64 devices, including communications ready transfer switch controllers, trip units and meters, as well as other Eaton devices. Versions of the Power Xpert Gateway include email event notification and data-logging functionality.

Magnum Fixed Mount Transfer Switch

2000 A, Four-Pole, NEMA 1 Enclosed, Through-the-Door Design

2000 A Three-Pole Fixed Design NEMA Behind-the-Door Enclosure

Eaton's drawout Magnum switch should be considered for any systems requiring either greater redundancy, easier maintainability, or where true selective coordination is desired.

Eaton's drawout Magnum switch provides the capability to isolate either of the two power sources (Source 1 or Source 2) and its associated logic while maintaining power to the load.

Each switching section is independent and can be replaced either with a spare switch, or for less critical replacement needs, a replacement unit is available from the factory.

Ease of Maintenance
Keyed quick-disconnect plugs are provided for easy and complete isolation of the control circuitry.

Maintenance can be performed on the logic independent from the power sections and still allow the user to manually transfer power under full load conditions.

Logic Disconnect Plugs

Deadfronts
The Magnum transfer switch comes standard with two deadfront panels mounted over the Magnum power case switch or breaker. These deadfronts provide additional protection isolation from any power connections. The power connections for Source 1, Source 2 and Load connections are all in the back compartment of the transfer switch.

Interlocking for Open Transition Applications
The open transition type Magnum transfer switches feature both mechanical (cable) and electrical interlocking to prevent paralleling of sources.

Mechanical Cable Interlock

Multi-Tap Voltage Selector
Allows the transfer switch to be readily applied on most system voltages worldwide by connecting to the proper terminals. Available system voltages include 120, 208, 220, 230, 240, 380, 401, 415, 480, or 600 Vac, 50 or 60 Hz.

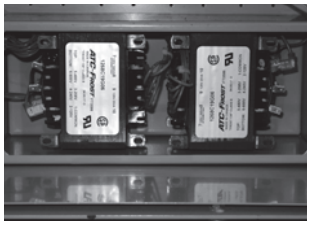

Voltage Selection Terminals

Typical Layout

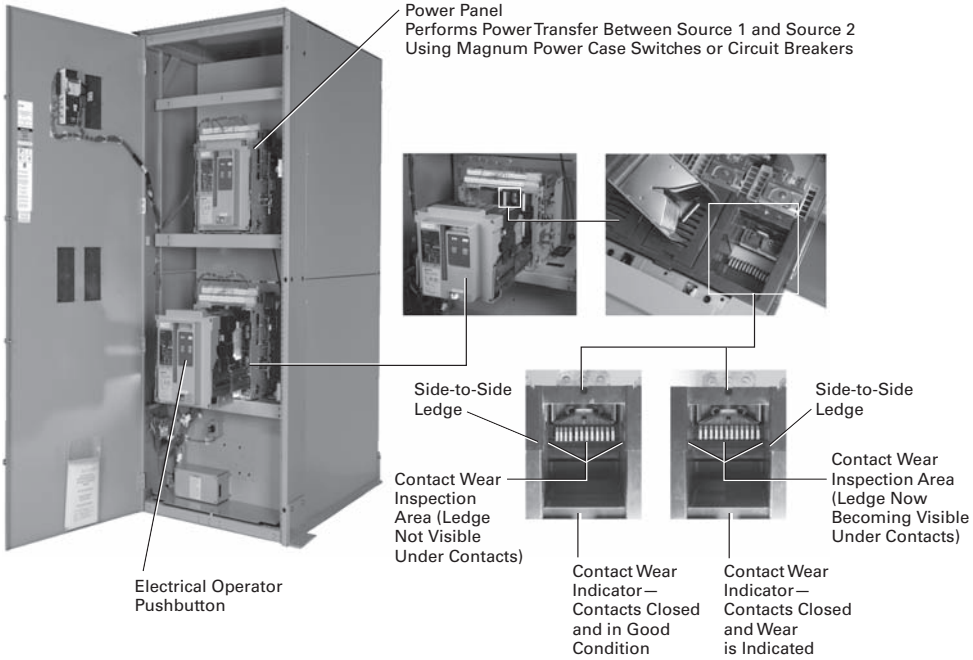

Basic Switch Components of Magnum Automatic Transfer Switches

Side View of Magnum
Side or Rear Access Required
(Half-High Side Panels and Back Panels are Not Shown)

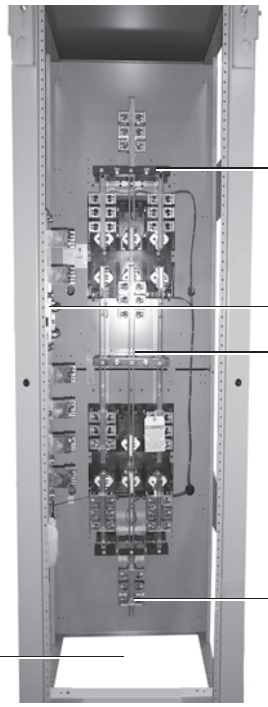

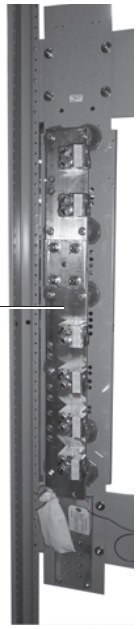

Neutral Assembly

Magnum-Based Transfer Switches

Product Selection

Eaton transfer switch equipment offers flexibility and versatility to the system designer and user. All switches include the basic features necessary for normal operation as standard. Eaton also offers an extensive array of optional features/accessories that allows the user to customize a new transfer switch to match the application. Select the appropriate catalog number for the application. Then choose any optional features/accessories needed to complete the project requirements.

Catalog Number: ATV9MGB33200XRU with Optional Features 16B and 37B

The example above would specify the following:

- Automatic transfer switch
- Vertical configuration
- ATC-900 logic
- Magnum DS frame
- Fixed mount
- Three-pole
- 3200 A
- 480 V
- NEMA 1 enclosure
- UL listed
- ATC-900 transfer logic
- Integral overcurrent protection both sources
- Service entrance rated with ground fault protection if service entrance rating was selected
- Seismic qualified

Catalog Number Selection

Using the catalog numbering system provides an overview of the ten basic style/feature categories that generate the 15-digit catalog number.

Magnum Automatic and Non-Automatic Transfer Switches 200–5000 A

AT V 9 MG B 3 3200 X R U

Type
- **AT** = Automatic
- **CT** = Closed transition
- **NT** = Non-auto

Orientation
- **V** = Vertical

Logic
- **9** = ATC-900
- **E** = Electromechanical

Frame
- **MG** = Magnum DS

Switch
- **A** = Fixed mount, power case switch PCS both
- **B** = Fixed mount, power case circuit breaker PCB both
- **C** = Fixed mount, PCB normal, PCS emergency
- **D** = Fixed mount, PCS normal, PCB emergency
- **E** = Drawout, PCS both
- **F** = Drawout, PCB both
- **G** = Drawout, PCB normal, PCS emergency
- **H** = Drawout, PCS normal, PCB emergency

Poles
- **2** = Two-pole
- **3** = Three-pole
- **4** = Four-pole

Amperes

0200 = 200 A	**1600** = 1600 A
0300 = 300 A	**2000** = 2000 A
0400 = 400 A	**2500** = 2500 A
0600 = 600 A	**3000** = 3000 A
0800 = 800 A	**3200** = 3200 A
1000 = 1000 A	**4000** = 4000 A ①
1200 = 1200 A	**5000** = 5000 A ①

Voltage
- **A** = 120 V, 60 Hz, three-phase, three-wire
- **B** = 208/120 V, 60 Hz, three-phase, four-wire
- **E** = 600 V, 60 Hz, three-phase, three-wire
- **E** = 600 V, 60 Hz, three-phase, four-wire
- **G** = 220/127 V, 50 Hz, three-phase, four-wire
- **H** = 380/220 V, 50 Hz, three-phase, four-wire
- **O** = 415/240 V, 50 Hz, three-phase, four-wire
- **W** = 240/120 V, 60 Hz, single-phase, three-wire
- **W** = 240 V, 60 Hz, three-phase, three-wire
- **W** = 240/120 V, 60 Hz, three-phase, four-wire hi-leg
- **X** = 480 V, 60 Hz, three-phase, three-wire
- **X** = 480/277 V, 60 Hz, three-phase, four-wire
- **X** = 480/240 V, 50 Hz, single-phase, two-wire

Enclosure
- **K** = Open ②
- **S** = NEMA 1
- **R** = NEMA 3R
- **T** = Through-door design

Listing
- **U** = UL listed CSA listed

Legend:
PCS = Power Case Switch
PCB = Power Circuit Breaker

Notes
① 4000 A and 5000 A available as drawout configuration only.
② Available on fixed-mounted units up to 3200 A.

Standards and Certifications

Eaton Magnum transfer switches meet or exceed all industry standards for endurance, reliability and performance. They are listed under Underwriters Laboratories UL 1008 Standard for transfer switch equipment. With certain options, they also comply with Source 2 and standby system requirements as defined in NFPA 99 for healthcare facilities.

- UL 1008—standard for safety for automatic transfer switches up to 4000 A; 5000 A available as UL 891 only
- UL 489—standard for circuit breakers and molded case switches
- CSA 22.2-178—Canadian transfer switch standard
- NEC Articles—code sections 517, 700, 701, 702—applicable switch equipment
- NFPA 110—Source 2 and Standby Power Systems
- NFPA 99—healthcare facilities
- EGSA 100S—standard for transfer switches
- NEMA ICS10—Standard for transfer switch equipment
- UBC—Uniform Building Code for Seismic Zone 4
- ISO® 9000—International Organization for Standardization
- CBC—California Building Code
- IBC—International Building Code
- BOCA—Building Officials Code Administrators

Technical Data and Specifications

Floor-Standing Magnum Transfer Switch

- Ambient temperature range: –40 °C to 40 °C (–40 °F to 104 °F)
- Operating temperature range: –20 °C to 70 °C (–4 °F to 158 °F)
- Operating humidity: up to 90%
- Relative humidity (noncondensing)

Magnum Drawout Transfer Switch

- 200–5000 A
- Two-, three-, four-pole (except 4000 A: three- and four-pole only)
- 120–600 Vac
- 100,000 A withstand/closing/interrupting at 480 Vac
- Short-time withstand–85,000 for 30 cycles

Magnum Fixed-Mount Transfer Switch

- 200–3200 A
- Two-, three-, four-pole (except 3200 A: two- and three-pole only)
- 120–600 Vac
- 100,000 A withstand/closing/interrupting at 3 cycle
- Short-time withstand–85,000 for 30 cycles

Magnum Drawout Transfer Switches

Automatic and Non-Automatic Transfer Switches

Enclosures meet all current applicable NEMA and UL standards for conduit entry, cable bending, gutter space and shielding of live components.

NEMA 1 and NEMA 3R Enclosures

Magnum transfer switches are supplied with a front door only. The NEMA 3R are provided with a door within a door design.

The Magnum transfer switch requires rear access. If placed against a wall, then a minimum of 3 feet is needed as well as side access on at least one of the sides. Access to cable space can be via the side, bottom, top or rear.

Optional Service Entrance Rated Automatic Transfer Switch

Eaton's service entrance rated power case breaker design is a 100% rated ATS and UL 1008 Listed up to 4000 A.

Transfer Switch Withstand Ratings

Systems Coordination Information—Withstand, Closing and Interrupting Ratings

Transfer Switch Ampere Rating	0.050 Seconds Short-Circuit 600 V (kA)	0.5 Seconds ① Short-Time 600 V (kA)
UL 1008		
800	100	85
1000	100	85
1200	100	85
1600	100	85
2000	100	85
2500	100	85
3000	100	85
3200	100	85
4000	100	—
UL 891		
4000	—	85 ②
5000	—	85 ②

Notes

① Ratings used for coordination with upstream breakers with short-time ratings.

② UL 1066 short-time withstand rating.

Dimensions

Approximate Dimensions in Inches (mm)

Magnum Fixed-Mount Transfer Switches

Ampere Rating	Number of Poles	A Height	B Width	C Depth	Shipping Weight Lb (kg)
NEMA 1 Enclosed Fixed-Mount Transfer Switch					
200–2000	2	90.00 (2286.0)	32.00 (812.8)	48.00 (1219.2)	1050 (477)
200–2000	3	90.00 (2286.0)	32.00 (812.8)	48.00 (1219.2)	1050 (477)
200–2000	4	90.00 (2286.0)	32.00 (812.8)	48.00 (1219.2)	1250 (568)
2500–3200	2	90.00 (2286.0)	44.00 (1117.6)	48.00 (1219.2)	1900 (863)
2500–3200	3	90.00 (2286.0)	44.00 (1117.6)	48.00 (1219.2)	1900 (863)
2500–3200	4	90.00 (2286.0)	44.00 (1117.6)	48.00 (1219.2)	2000 (910)
4000 ①	—	①	①	①	①
5000 ①	—	①	①	①	①
NEMA 3R Enclosed Fixed-Mount Transfer Switch					
200–2000	2	90.00 (2286.0)	32.00 (812.8)	63.00 (1600.2)	1600 (726)
200–2000	3	90.00 (2286.0)	32.00 (812.8)	63.00 (1600.2)	1600 (726)
200–2000	4	90.00 (2286.0)	32.00 (812.8)	63.00 (1600.2)	1800 (817)
2500–3200	2	90.00 (2286.0)	44.00 (1117.6)	63.00 (1600.2)	2400 (1090)
2500–3200	3	90.00 (2286.0)	44.00 (1117.6)	63.00 (1600.2)	2400 (1090)
2500–3200	4	90.00 (2286.0)	44.00 (1117.6)	63.00 (1600.2)	2500 (1135)
4000	—	①	①	①	—
5000	—	①	①	①	—

Note

① At 4000 and 5000 A, the standard design is drawout. See drawout dimensions.

200–3200 A Fixed-Mount NEMA 1

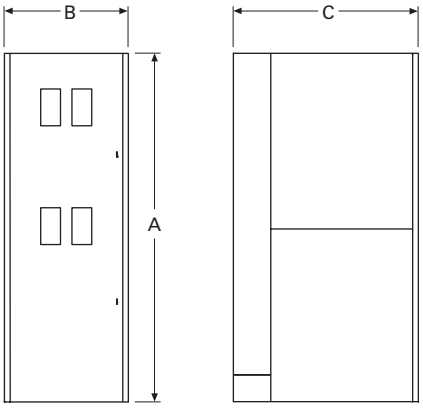

200–3200 A Fixed-Mount NEMA 3R

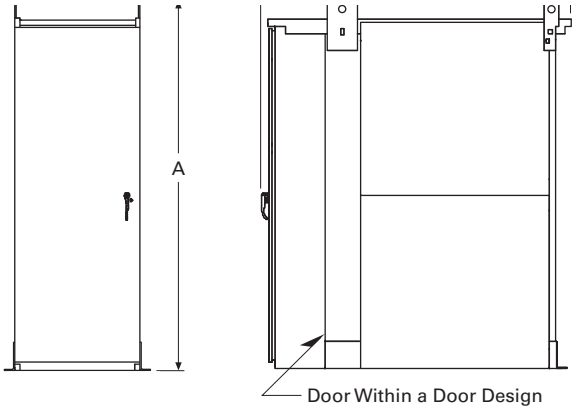

Approximate Dimensions in Inches (mm)

Magnum Drawout Transfer Switches

Ampere Rating	Number of Poles	A Height	B Width	C Depth	Shipping Weight Lb (kg)
NEMA 1 Enclosed Drawout Transfer Switch					
200–2000	2	90.00 (2286.0)	32.00 (812.8)	60.00 (1524.0)	1600 (727)
200–2000	3	90.00 (2286.0)	32.00 (812.8)	60.00 (1524.0)	1600 (727)
200–2000	4	90.00 (2286.0)	32.00 (812.8)	60.00 (1524.0)	1900 (864)
2500–3200	2	90.00 (2286.0)	44.00 (1117.6)	60.00 (1524.0)	2500 (1136)
2500–3200	3	90.00 (2286.0)	44.00 (1117.6)	60.00 (1524.0)	2500 (1136)
2500–3200	4	90.00 (2286.0)	44.00 (1117.6)	60.00 (1524.0)	2800 (1273)
NEMA 3R Enclosed Drawout Transfer Switch					
200–2000	2	90.00 (2286.0)	32.00 (812.8)	75.00 (1905.0)	2100 (953)
200–2000	3	90.00 (2286.0)	32.00 (812.8)	75.00 (1905.0)	2100 (953)
200–2000	4	90.00 (2286.0)	32.00 (812.8)	75.00 (1905.0)	2400 (1090)
2500–3200	2	90.00 (2286.0)	44.00 (1117.6)	75.00 (1905.0)	3000 (1362)
2500–3200	3	90.00 (2286.0)	44.00 (1117.6)	75.00 (1905.0)	3000 (1362)
2500–3200	4	90.00 (2286.0)	44.00 (1117.6)	75.00 (1905.0)	3300 (1498)

200–3200 A Drawout NEMA 1

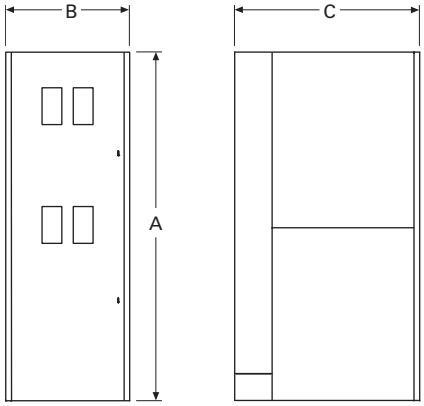

200–3200 A Drawout NEMA 3R

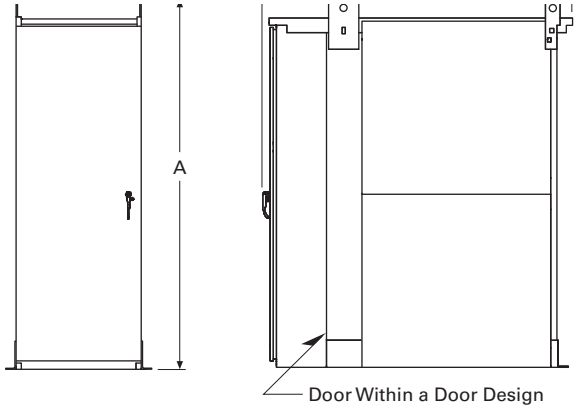

Approximate Dimensions in Inches (mm)

Magnum 4000–5000 A Units

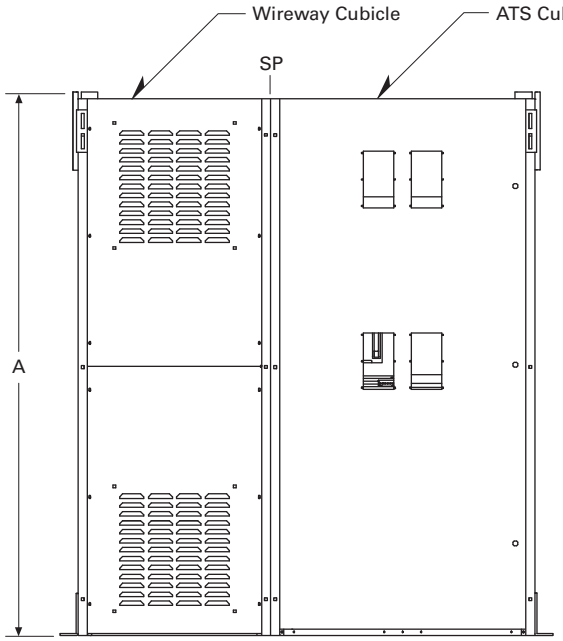

Front View With Covers

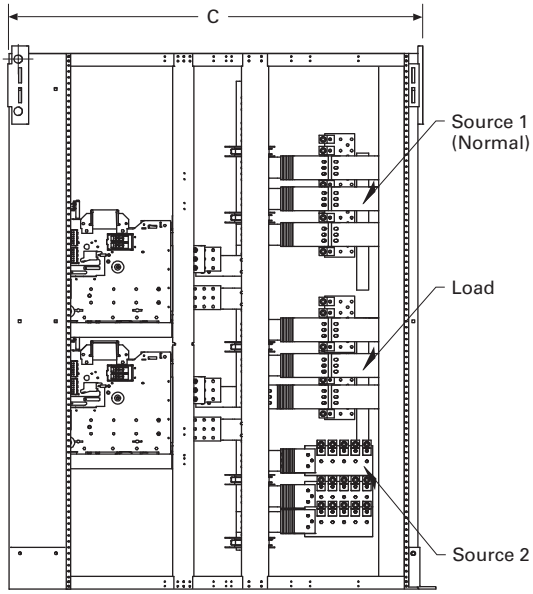

Right Side View

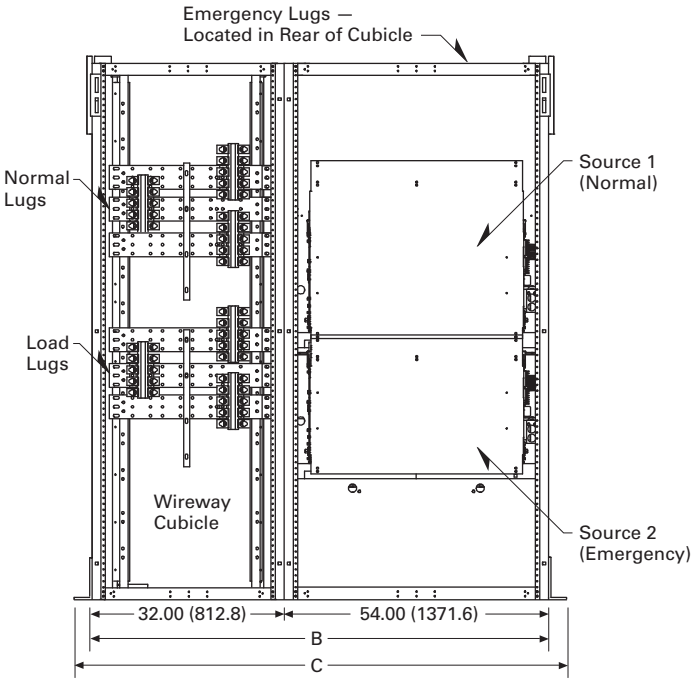

Front View Without Covers

SP = Shipping Split.
Consult factory for dimensions.

Connection Type (4000–5000 A Only)

Connection Type			
Line	**Emergency**	**Load**	**Wireway**
Cable	Cable	Cable	Yes
Bus	Cable	Cable	Yes
Cable	Bus	Cable	Yes
Cable	Cable	Bus	Yes
Bus	Bus	Cable	No
Bus	Cable	Bus	No
Cable	Bus	Bus	No
Bus	Bus	Bus	No

Magnum Drawout Transfer Switches

Ampere Rating	No. of Poles	A Height	B Width	C ① Width	D Depth	Shipping Weight Lb (kg)
4000	3 or 4	90.00 (2286.0)	86.00 (2184.4)	92.00 (2336.8)	68.00 (1727.2)	②
5000	3 or 4	90.00 (2286.0)	86.00 (2184.4)	92.00 (2336.8)	68.00 (1727.2)	②

Notes

① Seismic mounting adds 3.00 inches (76.2 mm) width to each side or additional 6.00 inches (152.4 mm) to width.

② Consult factory.

Note: The typical Magnum ATS at 4000 and 5000 A ratings will include one cubicle with the Source 1 and Source 2 power case switches or breakers. A second cubicle called a wireway is required unless bus is used for the connections per Connection Type table above. Cable connections to the wireway cubicle can be made from the top or bottom. The wireway cubicle will have removable panels on the front, and cable connections may be made from the top or the bottom. Cable connections to the power case switch or breaker cubicle are made from the back. Consult factory for dimensions. The wireway width is 32.00 inches (812.8 mm).

Bypass Isolation Transfer Switch

Contents

Description	*Page*
Power Case Switch—Floorstanding, 200–5000 A	**V2-T5-51**
Bypass Isolation Transfer Switch, 200–5000 A	
Standards and Certifications	**V2-T5-61**
Catalog Number Selection	**V2-T5-62**
Product Selection	**V2-T5-62**
Technical Data and Specifications	**V2-T5-63**

Bypass Isolation Transfer Switch, 200–5000 A

Product Description

A bypass isolation switch utilizes loadbreak isolation and bypass transfer power contacts. Thus, should voltage be lost on the line to which the ATS is connected, and should a manual bypass be required to the other line, this can be accomplished safely and quickly as described below. With contactor designs utilizing non-loadbreak isolation and bypass switches, manual bypass to the other line is hindered by mechanical or electrical safety interlocking.

Application Description

The bypass isolation switch is designed for applications where maintenance, inspection and testing must be performed while maintaining continuous power to the load. This is typically required in critical life-support systems and standby power situations calling for safe system maintenance with no power disruptions. Such a design allows for the quick removal of the different switching devices for inspection, maintenance or replacement.

Features, Benefits and Functions

Eaton's transfer switch is a rugged, compact design utilizing Magnum power switches or Magnum power circuit breakers to transfer essential loads from one power source to another. Open transition switching devices are interlocked to prevent both switching devices from being closed at the same time. The versatile design, in addition to standard transfer functions, offers an optional integral thermal and short-circuit protection in either or both switching devices.

The switching devices are in a compact vertical arrangement. The logic can be easily disconnected from the switching device without disturbing critical connections. The enclosure is free standing, and by using the specially supplied cleats, the switch is seismic approved (Option 42). The terminals are mounted in the rear of the switch, permitting rear, top, bottom or side cable or bus bar entrance.

The switching devices have a high withstand rating. The high-speed, stored-energy switching mechanism guarantees a transfer time of less than three cycles.

- Reliable microprocessor logic
- Designed to safely withstand fault currents
- Eliminates need for complex interlocks
- Most versatile bypass isolation transfer switch available
- Eaton drawout cassette design
- Overcurrent protection available
- No loadbreak when bypassing to the same source
- Drawout capabilities on both ATS and bypass portions
- Compact design
- Ability to test power switching elements during drawout process
- Power switching devices completely interchangeable between ATS and bypass portions

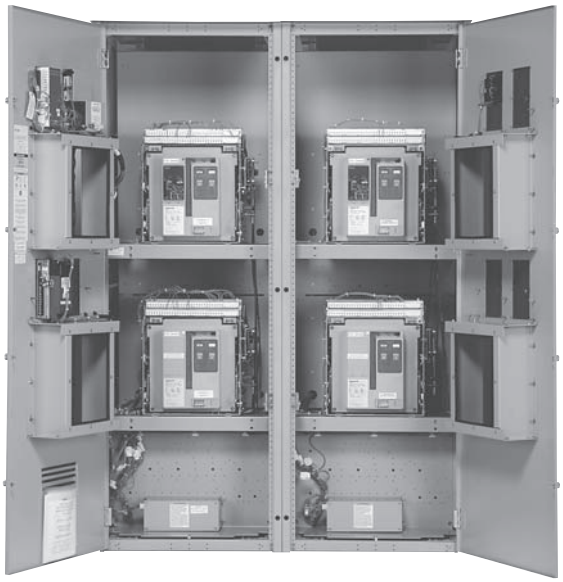

Magnum Bypass Isolation Front View without the Deadfront Panels—NEMA 1 Through the Door

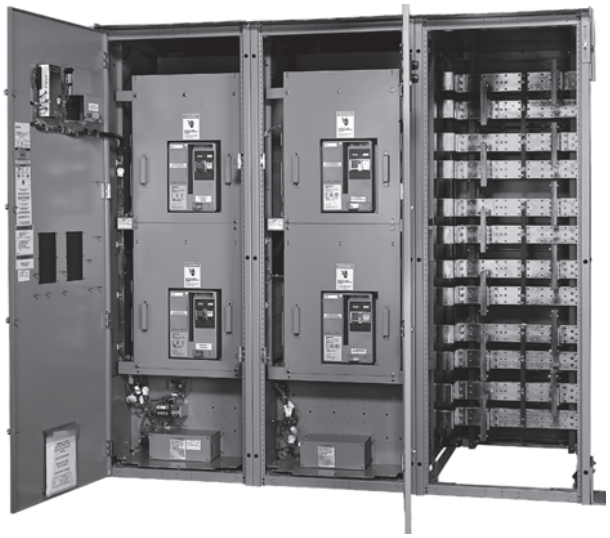

Front Access Option 54 A is Available on All Magnum Designs

Standards and Certifications

Eaton transfer switch equipment is listed for application by UL and CSA. In addition, Eaton ATSs are listed in File E38116 by Underwriters Laboratories under Standard UL 1008. This standard covers requirements for ATSs intended for use in ordinary locations to provide for lighting and power as follows:

A. In emergency systems, in accordance with Articles 517 and 700 in the National Electrical Code (NEC), American National Standards Institute/National Fire Protection Association (ANSI/NFPA) 70 and the NFPA No. 76A and/or

B. In standby systems, in accordance with Article 702 of the NEC and/or

C. In legally required standby systems in accordance with Article 701 of the NEC. Eaton ATSs are available to meet NFPA 110 for emergency and standby power systems, and NFPA 99 for health-care facilities when ordered with the appropriate options. Since Eaton ATSs utilize specially designed switches and/or switching devices as the main power switching contacts, these devices must also be listed under the additional UL Standard 1066. UL utilizes two basic types of listing programs:

a. Label Service, and

b. Re-examination. UL 1066 employs a label service listing program that requires an extensive follow-up testing program for listed devices. Standard UL 1008 for ATSs lists devices under the re-examination program that only requires a continual physical re-examination of the components used in the product to ensure consistency with the originally submitted device. Follow-up testing IS NOT required by UL 1008. Representative production samples of switches and switching devices used in Eaton ATSs are subjected to a complete test program identical to the originally submitted devices on an ongoing periodic basis per UL 1066. The frequency of such a re-submittal can be as often as every quarter for a low ampere device.

Note: IBC seismic qualified.

Catalog Number Selection

Using the catalog numbering system provides an overview of the ten basic style/feature categories that generate the 15-digit catalog number.

Magnum Bypass, Transfer Switches 200–5000 A

BI V 9 MG E 3 3200 X R U

Type
- **BI** = Bypass open transition
- **CB** = Closed transition/ bypass isolation

Orientation
- **V** = Vertical

Logic
- **9** = ATC-900

Frame
- **MG** = Magnum DS

Switch
- **E** = Drawout, PCS both
- **F** = Drawout, PCB both
- **G** = Drawout, PCB normal, PCS emergency
- **H** = Drawout, PCS normal, PCB emergency

Poles
- **2** = Two-pole
- **3** = Three-pole
- **4** = Four-pole

Amperes

0200 = 200 A	**1600** = 1600 A
0300 = 300 A	**2000** = 2000 A
0400 = 400 A	**2500** = 2500 A
0600 = 600 A	**3200** = 3200 A
0800 = 800 A	**4000** = 4000 A
1000 = 1000 A	**5000** = 5000 A
1200 = 1200 A	

Voltage
- **B** = 208/120 V, 60 Hz, three-phase, four-wire
- **E** = 600 V, 60 Hz, three-phase, three-wire
- **E** = 600 V, 60 Hz, three-phase, four-wire
- **G** = 220/127 V, 50 Hz, three-phase, four-wire
- **H** = 380/220 V, 50 Hz, three-phase, four-wire
- **O** = 415/240 V, 50 Hz, three-phase, four-wire
- **W** = 240/120 V, 60 Hz, single-phase, three-wire
- **W** = 240 V, 60 Hz, three-phase, three-wire
- **W** = 240/120 V, 60 Hz, three-phase, four-wire hi-leg
- **X** = 480 V, 60 Hz, three-phase, three-wire
- **X** = 480/277 V, 60 Hz, three-phase, four-wire
- **X** = 480/240 V, 50 Hz, single-phase, two-wire

Enclosure
- **S** = NEMA 1
- **R** = NEMA 3R
- **T** = Through-door design

Listing
- **U** = UL listed CSA listed

Legend:
PCS = Power Case Switch
PCB = Power Circuit Breaker

Product Selection

Eaton transfer switch equipment offers flexibility and versatility to the system designer and user. All switches include the basic features necessary for normal operation as standard. Eaton also offers an extensive array of optional features/ accessories that allows the user to customize a new transfer switch to match the application. Select the appropriate catalog number for the application. Then choose any optional features/accessories needed to complete the project requirements.

Catalog Number: BIV9MGE33200XRU

The example above would specify the following:

- Bypass isolation
- Vertical configuration
- ATC-900 controller
- Magnum DS frame
- Power case switch normal and emergency
- Drawout
- Three-pole
- 3200 A
- 480 V
- NEMA 3R enclosure
- UL listed

Technical Data and Specifications

Typical Bypass Isolation Switch Schematic

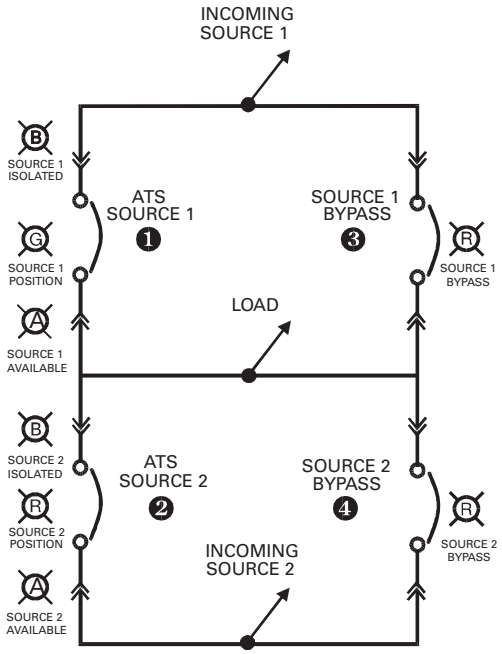

Systems Coordination Information—Withstand, Closing and Interrupting Ratings

Transfer Switch Ampere Rating	0.050 Seconds Short-Circuit 600 V (kA)	0.50 Seconds ① Short-Time 600 V (kA)
UL 1008		
800	100	85
1000	100	85
1200	100	85
1600	100	85
2000	100	85
2500	100	85
3000	100	85
3200	100	85
4000	100	—
UL 891		
4000	—	85 ②
5000	—	85 ②

Notes

① Ratings used for coordination with upstream breakers with short-time ratings.

② UL 1066 short-time withstand rating.

Approximate Dimensions in Inches (mm)

Magnum Bypass Isolation Drawout Transfer Switches

Ampere Rating	Number of Poles	A Height	B Width	C Depth	Shipping Weight Lb (kg)
NEMA 1 Enclosed Drawout Transfer Switch					
200–2000	2	90.00 (2286.0)	64.00 (1625.6)	60.00 (1524.0)	3100 (1409)
200–2000	3	90.00 (2286.0)	64.00 (1625.6)	60.00 (1524.0)	3100 (1409)
200–2000	4	90.00 (2286.0)	64.00 (1625.6)	60.00 (1524.0)	3700 (1682)
2500–3200	2	90.00 (2286.0)	64.00 (1625.6)	60.00 (1524.0)	4700 (2136)
2500–3200	3	90.00 (2286.0)	64.00 (1625.6)	60.00 (1524.0)	4700 (2136)
2500–3200	4	90.00 (2286.0)	64.00 (1625.6)	60.00 (1524.0)	5500 (2500)
NEMA 3R Enclosed Drawout Transfer Switch					
200–2000	2	90.00 (2286.0)	64.00 (1625.6)	75.00 (1905.0)	4100 (1861)
200–2000	3	90.00 (2286.0)	64.00 (1625.6)	75.00 (1905.0)	4100 (1861)
200–2000	4	90.00 (2286.0)	64.00 (1625.6)	75.00 (1905.0)	4700 (2134)
2500–3200	2	90.00 (2286.0)	64.00 (1625.6)	75.00 (1905.0)	5700 (2588)
2500–3200	3	90.00 (2286.0)	64.00 (1625.6)	75.00 (1905.0)	5700 (2588)
2500–3200	4	90.00 (2286.0)	64.00 (1625.6)	75.00 (1905.0)	6500 (2951)

Note: Add 3.00 inches (76.2 mm) to the height, 6.00 inches (152.4 mm) to the width and 3.00 inches (76.2 mm) to the depth to all enclosure dimensions to account for the seismic mounting brackets.

200–3200 A Drawout NEMA 1

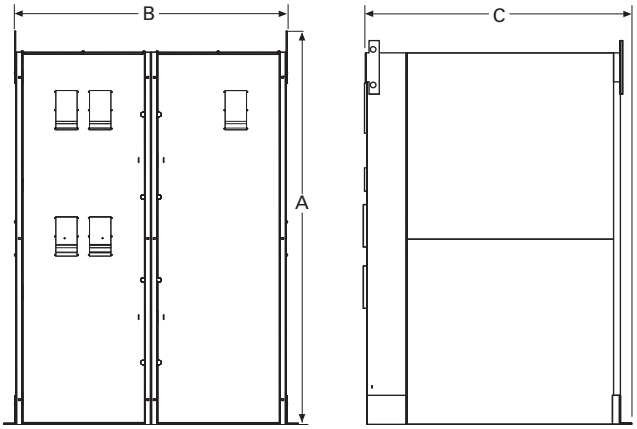

200–3200 A Drawout NEMA 3R

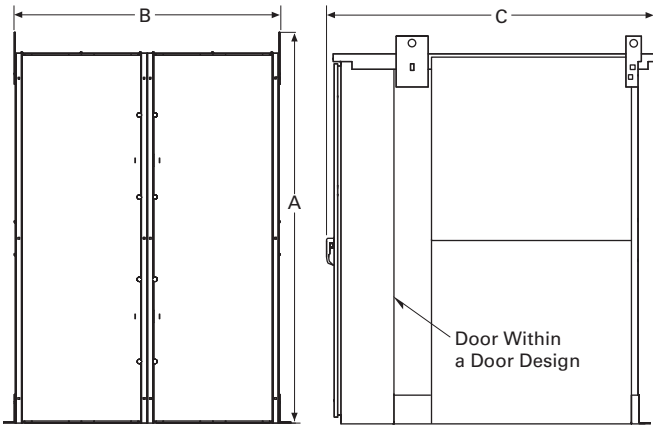

Approximate Dimensions in Inches (mm)

Magnum 4000–5000 A Units—NEMA 1

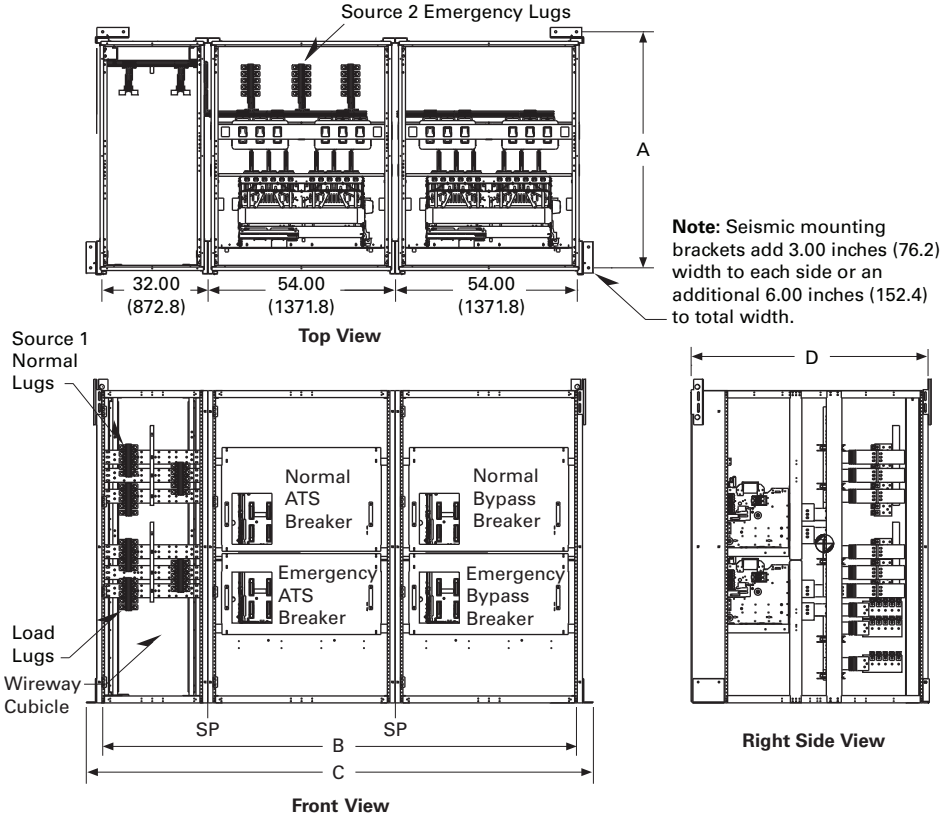

Note: Seismic mounting brackets add 3.00 inches (76.2) width to each side or an additional 6.00 inches (152.4) to total width.

Note: The 4000 and 5000 A bypass isolation ATS will include two cubicles for the Source 1 and Source 2 Normal and the Bypass power case switch.
An additional cubicle called a wireway is provided for the Normal and Load connections. The wireway cubicle will have removable panels on the front, and cable connections may be made from the top or the bottom. Cable connections for Emergency are made in the rear. The wireway width is 32.00 inches (812.8 mm).

SP = Shipping Split.
Consult factory for dimensions.

NEMA 1 Magnum Drawout Transfer Switches

Ampere Rating	Number of Poles	A Height	B Width	C ① Width	D Depth	Shipping Weight Lb (kg)
4000	3 or 4	90.00 (2286.0)	137.00 (3479.8)	146.00 (3708.4)	60.00 (1524.0)	②
5000	3 or 4	90.00 (2286.0)	137.00 (3479.8)	146.00 (3708.4)	60.00 (1524.0)	②

Magnum Bypass Isolation Drawout Transfer Switches

Ampere Rating	Number of Poles	A Height	B Width	C Depth	Shipping Weight Lb (kg)
NEMA 1 Enclosed Drawout Transfer Switch					
4000	2 or 3	90.00 (2286.0)	137.00 (3479.8)	60.00 (1524.0)	6900 (3133)
	4	90.00 (2286.0)	137.00 (3479.8)	60.00 (1524.0)	7600 (3450)
5000	2 or 3	90.00 (2286.0)	137.00 (3479.8)	60.00 (1524.0)	7900 (3587)
	4	90.00 (2286.0)	137.00 (3479.8)	60.00 (1524.0)	8600 (3904)
NEMA 3R Enclosed Drawout Transfer Switch					
4000	2 or 3	90.00 (2286.0)	137.00 (3479.8)	75.00 (1905.0)	7900 (3587)
	4	90.00 (2286.0)	137.00 (3479.8)	75.00 (1905.0)	8600 (3904)
5000	2 or 3	90.00 (2286.0)	137.00 (3479.8)	75.00 (1905.0)	8900 (4041)
	4	90.00 (2286.0)	137.00 (3479.8)	75.00 (1905.0)	9600 (4358)

Notes

① Seismic mounting adds 3.00 inches (76.2 mm) width to each side or additional 6.00 inches (152.4 mm) to width.

② Consult factory.

Contents

Description	*Page*
Product Selection Guide	
Automatic Transfer Controllers Feature Selection Chart	**V2-T5-67**
ATC-100 Controller	**V2-T5-70**
ATC-300+ Controller	**V2-T5-72**
ATC-900 Controller	**V2-T5-76**
Controller Replacement Guide	**V2-T5-87**

Product Selection Guide

Automatic Transfer Controllers Feature Selection Chart

Feature Description	ATC-100	ATC-300+	ATC-900
Transition			
Open transition	Standard	Standard	Standard
Closed transition	Not available	Not available	Standard
Timers			
Time delay normal to emergency (TDNE)	Standard	Standard	Standard
Time delay engine start (TDES)	Standard	Standard	Standard
Time delay emergency to normal (TDEN)	Standard	Standard	Standard
Time delay engine cooldown (TDEC)	Standard	Standard	Standard
Time delay emergency fail (TDEF)	Standard	Standard	Standard
Engine/Generator Exerciser			
Plant exerciser (PE) with fail-safe	Selectable—OFF, 7-, 14-, 28-day interval fixed run time 15 minutes no load/load with fail-safe	Selectable—OFF, 7-, 14-, 28-day interval, 0–600 minutes, no load/load with fail-safe	Two independent exerciser modes—OFF, daily, 7-, 14-, 28-day interval or by calendar date (up to 12 independent calendar dates). Test operations include independent transfer time delays
Source 1 Sensing			
All-phase undervoltage and underfrequency protection	Standard	Standard	Standard
All-phase overvoltage and overfrequency protection	Standard	Standard	Standard
Three-phase rotation sensing	Not available	Standard	Standard
Three-phase voltage unbalance	Not available	Standard	Standard
Source 2 Sensing			
All-phase undervoltage and underfrequency protection	Standard	Standard	Standard
All-phase overvoltage and overfrequency protection	Standard	Standard	Standard
Three-phase rotation sensing	Not available	Standard	Standard
Three-phase voltage unbalance	Not available	Standard	Standard

Automatic Transfer Controllers Feature Selection Chart, continued

Feature Description	ATC-100	ATC-300+	ATC-900
Manual Controls			
Test operators	Standard	Standard	Standard
Four-position test selector switch (FPSS)	Not available	Not available	Optional
Time delay bypass pushbutton	Not available	Standard	Standard
Maintenance selector switch (MSS)	Not available	Optional	Optional
Automatic/manual operation selector switch	Not available	Optional	Optional
Automatic/manual retransfer selector switch	Not available	Not available	Optional
Manual retransfer pushbutton	Not available	Optional	Optional
Indications / Status Display			
Source 1 connected / Source 2 connected	Standard	Standard	Standard
Source 1 available / Source 2 available	Standard	Standard	Standard
Source 1 tripped / Source 2 tripped	Standard	Standard	Standard
Customer Outputs			
Source 1 / Source 2 present contacts	Not available	Standard—2NO and 2NC	Not available
Source 1 available / Source 2 available contacts	Not available	Not available	Standard—1 Form C
Load sequence	Not available	Not available	Configurable—1 Form C
Selective load shed	Not available	Not available	Configurable—1 Form C
Load bank control	Not available	Not available	Configurable—1 Form C
Pre-transfer	Not available	Standard—1 Form C	Configurable—1 Form C
Pre-/post-transfer	Not available	Not available	Configurable—1 Form C
Source 1 connected	Not available	Not available	Configurable—1 Form C
Source 2 connected	Not available	Not available	Configurable—1 Form C
ATS not in automatic	Not available	Not available	Configurable—1 Form C
General alarm	Not available	Standard	Configurable—1 Form C
ATS in test	Not available	Not available	Configurable—1 Form C
Engine test aborted	Not available	Not available	Configurable—1 Form C
Cooldown in process	Not available	Not available	Configurable—1 Form C
Engine start contact status	Not available	Not available	Configurable—1 Form C
Emergency inhibit on	Not available	Not available	Configurable—1 Form C
Switch Position Indication Contact			
Source 1 position indication contact	Not available	Standard—1 Form C	Standard—1 Form C
Source 2 position indication contact	Not available	Standard—1 Form C	Standard—1 Form C

Automatic Transfer Controllers Feature Selection Chart, continued

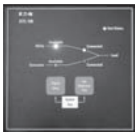

Feature Description	ATC-100	ATC-300+	ATC-900
Customer Inputs			
Go to emergency (Source 2)	Not available	Standard	Standard—configurable input
Load shed / emergency inhibit	Not available	Standard	Standard—configurable input
Monitor mode	Not available	Optional	Standard—configurable input
Bypass timers	Not available	Not available	Standard—configurable input
Lockout	Not available	Optional	Standard—configurable input
Manual retransfer on/off	Not available	Programmed	Standard—configurable input
Manual retransfer	Not available	Standard	Standard—configurable input
Slave in	Not available	Not available	Standard—configurable input
Remote engine test	Not available	Not available	Standard—configurable input
Preferred source selection	Not available	Not available	Standard—configurable input
Remote load test	Not available	Not available	Standard—configurable input
ATS on bypass	Not available	Not available	Standard—configurable input
Integrated Metering			
DCT metering—load side	Not available	Not available	Optional
Communications			
Modbus 485	Not available	Optional	Standard
Modbus TCP/IP	Not available	Optional	Optional
Transfer Mode Open Transition			
Delayed—time delay neutral	Standard—based on construction	Standard—based on construction	Standard—based on construction
In-phase monitoring	Standard—based on construction	Standard—based on construction	Standard—based on construction
Load voltage decay	Not available	Not available	Standard—based on construction
Transfer Mode Closed Transition			
Closed transition	Not available	Not available	Standard—based on construction
Closed transition/In-phase	Not available	Not available	Standard—based on construction
Closed transition/In-phase/ Time delay neutral	Not available	Not available	Standard—based on construction
Closed transition/In-phase/ Load voltage delay	Not available	Not available	Standard—based on construction
Service Entrance Rating			
Source 1, Source 2 or both, and with and without ground fault protection	Not available	Optional	Optional
Stainless Steel Cover			
SS lockable cover for controller		Optional	Optional

Automatic Transfer Controllers Feature Selection Chart, continued

Feature Description	ATC-100	ATC-300+	ATC-900
	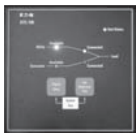		
Programming Selections			
Time delay normal to emergency	3 seconds (fixed)	0–1800 seconds	0–9999 seconds
Time delay emergency to normal	5 minutes (fixed)	0–1800 seconds	0–9999 seconds
Time delay engine cooldown	5 minutes (fixed)	0–1800 seconds	0–9999 seconds
Time delay engine start	3 seconds (fixed)	0–120 seconds	0–120 seconds
Time delay neutral	Not available	0–120 seconds	0–120 seconds or based on load voltage decay of 2–30% of nominal
Time delay Source 2 fail	Not available	0–6 seconds	0–6 seconds
Time delay voltage unbalance	Not available	10–30 seconds	10–30 seconds
Voltage unbalance three-phase	Not available	0 or 1 (1 = enabled)	Enabled or disabled
Phase reversal three-phase	Not available	Dropout 5–20% Pickup (DO –2%) –3%	Dropout 5–20% Pickup (DO –2%) –3%
In-phase	Not available	0 or 1 (1 = enabled)	
Load sequencing	Not available	Not available	0–120 seconds (up to xx devices)
Pre-transfer signal	Not available	1–120 seconds	0–120 seconds
Plant exerciser	Selectable—OFF, 7-, 14-, 28-day interval, fixed run time 15 minutes, no load/load with fail-safe	Selectable—OFF, 7-, 14-, 28-day interval, 0–600 minutes, no load/ load with fail-safe	Two independent exerciser modes—OFF, daily, 7-, 14-, 28-day interval or by calendar date (up to 12 independent calendar dates). Test operations include independent transfer time delays
Preferred source selection	Not available	Not available	Source 1, Source 2 or None
Commitment to transfer in TDNE	Not available	Not available	Enabled or disabled
Retransfer mode N/A automatic or manual	Not available	Optional	Enabled or disabled
Auto daylight saving time adjustment	Not available	Not available	Enabled or disabled
System selection	Utility/generator	Utility/generator or dual utility	Utility/generator, dual utility, dual generator or three source
Voltage Specification			
System application voltage	Up to 480 Vac	Up to 600 Vac	Up to 600 Vac
Voltage measurements	Source 1 and 2	Source 1 and 2—VAB, VBC and VCA	Source 1, 2 and load—VAB, VBC and VCA
Voltage measurement range	120–480 Vac	0–790 Vac rms	0–700 Vac rms
Operating power	95–145 Vac	65–145 Vac	65–160 Vac 24 Vdc (±10%)
Frequency Specifications			
Frequency measurements	Source 2	Source 1 and 2	Source 1 and 2
Frequency measurement range	50–60 Hz	40–70 Hz	40–70 Hz
Environmental Specifications			
Operating temperature range	–20 to +70 °C	–20 to +70 °C	–20 to +70 °C
Storage temperature range	–30 to +85 °C	–30 to +85 °C	–30 to +85 °C
Operating humidity	0 to 95% relative humidity (noncondensing)	0 to 95% relative humidity (noncondensing)	0 to 95% relative humidity (noncondensing)
Operating environment	Resistant to ammonia, methane, nitrogen, hydrogen and hydrocarbons	Resistant to ammonia, methane, nitrogen, hydrogen and hydrocarbons	Resistant to ammonia, methane, nitrogen, hydrogen and hydrocarbons
Front Panel Indication			
Mimic diagram with LED indication	Unit status, Source 1 and 2 available and connected (five total)	Unit status, Source 1 and 2 available and connected (five total)	Unit status, Source 1 and 2 available and connected (seven total)
Main display	N/A	LCD-based display, 2 lines, 16 characters	LCD display, 4.3 inch color TFT (480x272)
Display language	N/A	English, French and Spanish	English, French and Spanish
Communications capable	N/A	Modbus 485	Modbus 485 or Ethernet TCP/IP
Enclosure compatibility	NEMA 1 and 3R	NEMA 1, 12, 3R and 4X UV resistant faceplate	NEMA 1, 12, 3R and 4X UV resistant faceplate

ATC-100 Controller

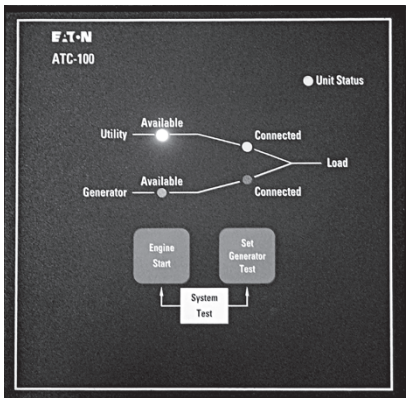

Contents

Description	*Page*
Product Selection Guide	**V2-T5-66**
ATC-100 Controller	
Standards and Certifications	**V2-T5-71**
Technical Data and Specifications	**V2-T5-71**
ATC-300+ Controller	**V2-T5-72**
ATC-900 Controller	**V2-T5-76**
Controller Replacement Guide	**V2-T5-87**

5

ATC-100 Controller

Product Description

The ATC-100 Controller is a comprehensive, multifunction, microprocessor-based ATS controller. It is a compact, self-contained, panel-mounted device designed to replace traditional relay and solid-state logic panels.

Application Description

The ATC-100 Controller provides both fixed and jumper-selectable settings to allow for a range of applications. It operates from all system voltages between 120 and 480 Vac, single-phase and three-phase, at 50 or 60 Hz. In addition, a period of no control power operation is provided. The ATC-100 Controller monitors the condition of the three-phase line-to-line voltage and frequency of both the utility and generator power sources. It can also be set up for single-phase operation. The ATC-100 controller provides the necessary intelligence to ensure that the transfer switch operates properly through a series of sensing and timing functions.

The ATC-100 controller can be used with both the breaker-based design and the contactor-based design up to 400 A single- or three-phase. The ATC-100 controller is designed for residential or light commercial applications. If an application is defined as an Emergency or Legally required system, then Eaton recommends that an ATC-300+ or ATC-900 controller be used. See **Page V2-T5-71** for ranges and factory settings.

Features, Benefits and Functions

Standard Features

- Auxiliary relay contacts:
  - Source 1 present 2NO and 2NC
  - Source 2 present 2NO and 2NC
- Switch position indication contacts:
  - Source 1 position 1NO and 1NC
  - Source 2 position 1NO and 1NC
- Source 1 and Source 2 sensing:
  - Undervoltage/under frequency
  - Overvoltage/over frequency
- Controller settings via jumpers located at the rear of the unit
- Mimic diagram with source available and connected LED indication
- System TEST pushbutton
- Selectable—OFF, daily, 7-, 14-, 28-day interval fixed run time 15 minutes no load/load with fail-safe
- Monitor utility and generator power source voltages and generator power source frequency
- Provide undervoltage protection of the utility and generator power sources
- Provide underfrequency and overfrequency protection of the utility and generator power source
- Permit easy customer setup
- Permit system testing
- Provide faceplate source status indications

Standards and Certifications

- UL listed component
- IEC 61000-4-2, 61000-4-3, 61000-4-4, 61000-4-5, 61000-4-6, 61000-4-11
- CISPR 11, Class B
- FCC Part 15, Class B

Technical Data and Specifications

ATC-100 Controller Specifications

Description	Specification
Input control voltage	95 to 145 Vac 50/60 Hz
Voltage measurements of	Utility V_{AB} Generator V_{AB} Utility V_{BC} Generator V_{BC} Utility V_{CA} Generator V_{CA}
Voltage measurement range	0 to 575 Vac rms (50/60 Hz)
Voltage measurement accuracy	±1% of full scale
Frequency measurements of	Generator
Frequency measurement range	40 Hz to 70 Hz
Frequency measurement accuracy	±0.3 Hz over the measurement range
Operating temperature range	–20 ° to +70 °C (–4 ° to +158 °F)
Storage temperature range	–0 ° to +85 °C (–22 ° to +185 °F)
Operating humidity	0 to 95% relative humidity (noncondensing)
Operating environment	Resistant to ammonia, methane, nitrogen, hydrogen and hydrocarbons
Generator start relay	5 A, 1/6 hp @ 250 Vac 5 A at 30 Vdc with a 150W maximum load
K1, K2 relays	10 A, 1–3 hp @ 250 Vac 10 A @ 30 Vdc
Enclosure compatibility	NEMA 1, NEMA 3R and NEMA 12 UV-resistant ATC-100 faceplate

Adjustable Features with Range and Factory Default

Set Point	Fixed/ Adjustable	Description	Range	Factory Default Breakers	Factory Default Contactors
TDES	Fixed	Time delay engine start	3 seconds	3 seconds	3 seconds
TDNE	Jumper-selectable	Time delay normal to emergency	2 or 15 seconds	15 seconds	15 seconds
TDEN	Fixed	Time delay emergency to normal	5 minutes	5 minutes	5 minutes
TDEC	Fixed	Time delay engine cool-off	1 minute	1 minute	1 minute
NOM FREQ	Jumper-selectable	Nominal frequency	50 or 60 Hz	As ordered	As ordered
NOM VOLTS	Jumper-selectable	Nominal voltage	120, 208, 220, 230, 240, 380, and 480 V	As ordered	As ordered
S1 UV DROP	Fixed	Utility undervoltage dropout	80% of NOMV	80% of NOMV in volts	80% of NOMV in volts
S2 UV DROP	Fixed	Generator undervoltage dropout	80% of NOMV	80% of NOMV in volts	80% of NOMV in volts
S1 UV PICK	Fixed	Utility undervoltage pickup	90% of NOMV	90% of NOMV in volts	90% of NOMV in volts
S2 UV PICK	Fixed	Generator undervoltage pickup	90% of NOMV	90% of NOMV in volts	90% of NOMV in volts
S2 UF DROP	Fixed	Utility underfrequency dropout	90% of NOMF	90% of NOMF in hertz	90% of NOMF in hertz
S2 UF PICK	Fixed	Generator underfrequency pickup	95% of NOMF	95% of NOMF in hertz	95% of NOMF in hertz
S2 OF DROP	Jumper-selectable	Generator overfrequency dropout	Off or 115% of NOMF (contactor)	Off	115%
S2 OF PICK	Jumper-selectable	Generator overfrequency pickup	Off or 110% of NOMF	Off	110%
Generator test	Jumper-selectable	Generator test programming	7-, 14- or 28-day	7-day	7-day
Test mode	Jumper-selectable	Test mode	Off, No Load, Load	Off	Off
TER	Fixed	Engine run test time	15 minutes	15 minutes	15 minutes
PHASES	Jumper-selectable	Three-phase or single-phase	1 or 3	As ordered	As ordered
TDEF	Fixed	Time delay emergency fail timer	6 seconds	6 seconds	6 seconds
TDN	Jumper-selectable	Time delay neutral	Disabled (0 seconds) or enabled (2 seconds)	Enabled (2 seconds)	Enabled (2 seconds)

ATC-300+ Controller

Contents

Description	Page
Product Selection Guide	V2-T5-66
ATC-100 Controller	V2-T5-70
ATC-300+ Controller	
Standards and Certifications	V2-T5-73
Technical Data and Specifications	V2-T5-73
ATC-900 Controller	V2-T5-76
Controller Replacement Guide	V2-T5-87

5

ATC-300+ Controller

Product Description

Transfer switches are equipped with the high-performance ATC-300+ digital transfer controller, receive rock-solid monitoring, status reporting and transfer control operation. Its superior design and robust construction make the ATC-300+ the industry benchmark for critical and distributed power systems.

Application Description

Eaton's ATC-300+ Controller-Based Automatic Transfer Switch is designed to provide unmatched performance, reliability and versatility for critical standby power applications.

Features, Benefits and Functions

Standard Features

- Auxiliary relay contacts:
  - Source 1 present 2NO and 2NC
  - Source 2 present 2NO and 2NC
- Switch position indication contacts:
  - Source 1 position 1NO and 1NC
  - Source 2 position 1NO and 1NC
- Source 1 and Source 2 sensing:
  - Undervoltage/ underfrequency
  - Overvoltage/ overfrequency
  - Three-phase rotation protection
  - Three-phase voltage unbalance
- Pretransfer signal contacts 1NO/1NC
- Go to emergency (Source 2)
- Seven field-programmable time delays
- LCD-based display for programming, system diagnostic and Help message display
- Mimic diagram with source available and connected LED indication
- Time-stamped history log
- System TEST pushbutton
- Programmable plant exerciser—OFF, daily, 7-, 14-, 28-day interval selectable run time 0–600 minutes no load/ load with fail-safe

Optional Features

- Suitable for use as service equipment in the standard enclosure size when used with breaker-based design transfer switches
- Available UL 1449 3rd Edition compliant surge protection devices
- Integrated distribution panels
- Field-selectable multi-tap transformer panel permits operation on a wide range of system voltages
- Integral overcurrent protection available when used with breaker-based design transfer switches
- Space heater with thermostat
- Ammeter—load side
- Power quality metering
- Stainless steel cover for controller
- Manual retransfer from emergency to normal
- Communication via Modbus RTU—metering data, engine test, set point management system status
- Load shed/emergency inhibit
- Remote annunciator available

Standards and Certifications

- UL listed component
- Meets intent of UL 991, 1008
- Meets IEC 1000-4-2, 1000-4-3, 1000-4-4, 1000-4-5, 1000-4-6, 1000-4-11
- Meets CISPR 11, Class A
- Complies with FCC Part 15, Class A

Technical Data and Specifications

ATC-300+ Controller Specifications

Description		Specification
Input control voltage		65 to 145 Vac 50/60 Hz
Voltage measurements of		Source 1 V_{AB} Source 2 V_{AB} Source 1 V_{BC} Source 2 V_{BC} Source 1 V_{CA} Source 2 V_{CA}
Voltage measurement range		0 to 790 Vac RMS (50/60 Hz)
Voltage measurement accuracy		±1% of full scale
Frequency measurements of		Source 1 and Source 2
Frequency measurement range		40 Hz to 70 Hz
Frequency measurement accuracy		±0.3 Hz over the measurement range
Undervoltage dropout range:	Breaker/switch style ATS	50 to 97% of the nominal system voltage
	Contactor style ATS	78 to 97% of the nominal system voltage
Undervoltage pickup range:	Breaker/switch style ATS	(Dropout +2%) to 99% of the nominal system voltage
	Contactor style ATS	(Dropout +2%) to 99% of the nominal system voltage
Overvoltage dropout range:	Breaker/switch style ATS	105 to 120% of the nominal system voltage
	Contactor style ATS	105 to 110% of the nominal system voltage
Overvoltage pickup range:	Breaker/switch style ATS	103% to (dropout –2%) of the nominal system voltage
	Contactor style ATS	103% to (dropout –2%) of the nominal system voltage
Underfrequency dropout range:	Breaker/switch style ATS	90 to 97% of the nominal system frequency
	Contactor style ATS	90 to 97% of the nominal system frequency
Underfrequency pickup range:	Breaker/switch style ATS	(Dropout +1Hz) to 99% of the nominal system frequency
	Contactor style ATS	(Dropout +1Hz) to 99% of the nominal system frequency
Overfrequency dropout range:	Breaker/switch style ATS	103 to 110% of the nominal system frequency
	Contactor style ATS	103 to 105% of the nominal system frequency
Overfrequency pickup range:	Breaker/switch style ATS	101% to (dropout –1 Hz) of the nominal system frequency
	Contactor style ATS	101% to (dropout –1 Hz) of the nominal system frequency
Operating temperature range		–20 °C to +70 °C (–4 °F to +158 °F)
Storage temperature range		–30 °C to +85 °C (–22 °F to +185 °F)
Operating humidity		0 to 95% relative humidity (noncondensing)
Operating environment		Resistant to ammonia, methane, nitrogen, hydrogen and hydrocarbons
Generator start relay		5 A, 1/6 Hp at 250 Vac
		5 A at 30 Vdc with a 150W maximum Load
K1, K2, pretransfer, alarm relays		10 A, 1–3 hp at 250 Vac
K3, K4		10 A at 30 Vdc
Applicable testing		UL recognized component
		Meets UL 1008
		Meets Intent of UL 991
		Meets IEC 1000-4-2, 1000-4-3, 1000-4-4, 1000-4-5, 1000-4-6, 1000-4-11
		Meets CISPR 11, Class A
		Complies with FCC Part 15, Class A
Enclosure compatibility		NEMA 1, NEMA 3R and NEMA 12
		UV resistant ATC-300+ faceplate

Closed Transition ATC-300+ Front Panel Display and Button Functions

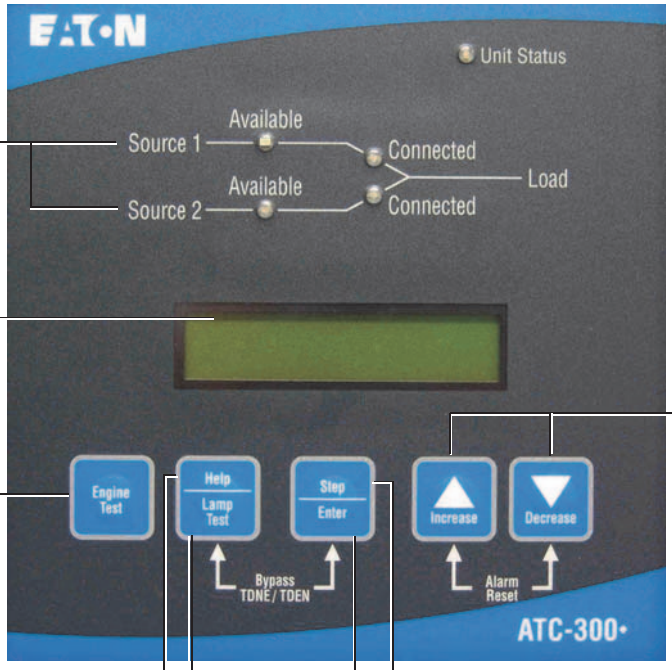

Source 1, Source 2, and Load
Colored LED lights show status of both Sources and Load.

LED Display
Unit will provide LED readout showing actual metered values for Voltage, Frequency and Condition (including Normal, Undervoltage, Overvoltage, etc.)

Engine Test Button
Pressing this button twice initiates an engine test.

Help
Pressing the Help button in any function mode will bring up display messages, explanations and prompts to assist the operator.

Lamp Test

Enter

Step Button
Shows multiple variables under each display select function.

Increase/Decrease
A detailed explanation of these buttons can be found in the Operation section.

The following set points are programmable if the corresponding feature is programmed.

ATC-300+ Programming Features/Set Points ①

Set Point	Set Point Units	Description	Range	Factory Default
TDES	Minutes: seconds	Time delay engine start	0–120 seconds	0:03
TDNE	Minutes: seconds	Time delay normal to emergency	0–1800 seconds	0:00
TDEN	Minutes: seconds	Time delay emergency to normal	0–1800 seconds	5:00
TDEC	Minutes: seconds	Time delay engine cool-off	0–1800 seconds	5:00
TDN	Minutes: seconds	Time delay neutral	0–120 seconds	0:00
PLANT EXER	Days	Plant exerciser programming	Off, daily, 7-day, 14-day or 28 day	Off
TEST MODE	—	Test Mode	0, 1 or 2 (0 = no load engine test, 1 = load engine test, 2 =disabled)	0
TER	Hours: minutes	Engine run test time	0–600 min	5:00
TPRE	Minutes: seconds	Pre-transfer delay timer	0–120 sec	0:00
PHASES	—	Three-phase or single-phase	1 or 3	As ordered
VOLT UNBAL	Volts	Voltage unbalanced	0 or 1 (1 = enabled)	1
UNBAL DROP %	Percent	Percent for unbalanced voltage dropout	5–20% of phase voltage unbalance	20%
UNBAL PICK %	Percent	Percent for unbalanced voltage pickup	Dropout minus (UNBAL DROP % –2) to 3%	10%
UNBAL DELAY	Seconds	Unbalanced delay timer	10–30	0:20
TDEF	Seconds	Time delay emergency fail timer	0–6 sec	6
PHASE REV	—	Phase reversal	OFF, ABC or CBA	OFF

Note

① Complete list of programming selections found in IB01602009E.

ATC-900 Controller

Contents

Description	*Page*
Product Selection Guide	**V2-T5-66**
ATC-100 Controller	**V2-T5-70**
ATC-300+ Controller	**V2-T5-72**
ATC-900 Controller	
Technical Data and Specifications	**V2-T5-86**
Dimensions	**V2-T5-86**
Controller Replacement Guide	**V2-T5-87**

ATC-900 Controller

Product Description

Eaton's ATC-900 brings intelligence, adaptability, and enhanced supervisory and programming capabilities to Eaton's complete transfer switch product offering including contactor-, breaker- and Magnum-based transfer switches. The one standard model concept offers a variety of monitoring and control features, selective load shedding, remote load testing, along with event logging/recording and Modbus communications. With configurable monitoring and control features and add-on accessory modules, the ATC-900 provides the flexibility to meet current and future system needs.

Application Description

High reliability makes the ATC-900 ideal for mission-critical installations in the healthcare, water, industrial and data center industries. An intelligent control architecture allows the ATC-900 to address virtually any system requirements. Typical applications include utility-to-utility, utility-to-generator and generator-to-generator transfer pairs, and advanced programming features provide for control of three-source systems. Design flexibility allows for operations with open, in-phase, delayed or closed transition platforms.

Features, Benefits and Functions

Ease of use is a major benefit of the ATC-900 controller. The simple yet powerful user interface includes many intuitive operating features. The color display and LED indications provide enhanced operator visibility of transfer switch status and system detail. Clear operational focus was achieved through design simplicity. Front arrow keys allow for quick screen navigation, removal of codes and abbreviations avoid potential confusion, and refined data screens provide for ease of viewing and edits.

Primary Functions

The ATC-900 Automatic Transfer Switch Controller offers these standard features:

- Monitor normal and emergency source voltages and frequencies
- Provide transfer and retransfer control signals
- Provide engine/generator start and shutdown signals
- Permit user programming of operational set points
- Display real-time and historical information
- Permit system testing
- Store customer and factory established parameters in nonvolatile memory
- Provide faceplate source status indication
- Provide an LCD for programming and status readouts

Features and Benefits

- LCD screen for system status, programming, system diagnostics, help, and troubleshooting
- Event logging and recording, 450 time stamped events
- 0–600 V field programmable system voltage flexible configuration with assignable inputs and outputs
- Three-source ATS control—master and slave controller functionality
- Selective, automatic load shedding
- Industry standard communication protocols—Modbus RTU and/or Modbus TCP/IP communications interface
- USB drive for uploading and downloading of event data
- USB drive for uploading and downloading programmed set points

ATC-900 User Interface

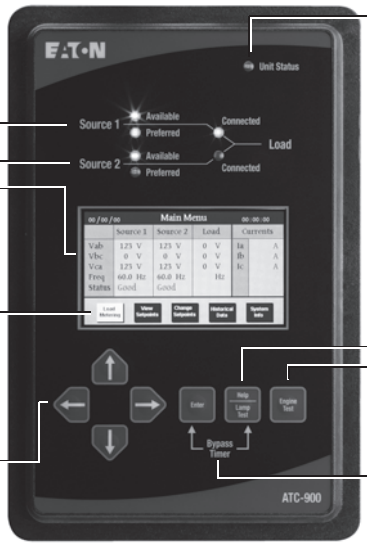

LED Mimic Diagram
Source 1 and Source 2 color-coded LEDs provide Available and Connected status indication.

Status Screen
The ATC-900 Main Menu screen provides transfer switch status at a glance. Source 1, Source 2 and load-metering data are displayed as well as any active alarms.

Display
The ATC-900 eliminates the use of codes and abbreviations for transfer switch functions. Data screens are grouped for ease of viewing and edits.

Arrow Key Navigation
Right and Left Arrow Keys are used to navigate menu options and Up and Down Arrow Keys are used to select and change set point values.

Unit Status Light
This LED blinks green indicating that the ATC-900 is operating and providing the transfer switch control function in keeping with programmed set points. If the LED is not lit or is on continuously, a problem may be indicated.

Help
Displays controller firmware version and user tips.

Lamp Test
Pressing the Lamp Test pushbutton lights all LEDs and then displays ATC-900 controller information.

Engine Test
Performs an engine test using the programmed engine run and cooldown times. This is a password-protected feature.

Bypass Time Delays
Pressing the Enter and Help pushbuttons simultaneously reduces the active programmed time delay to zero to simplify test procedures.

ATC-900 Connections

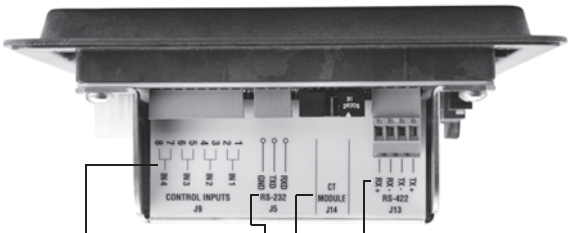

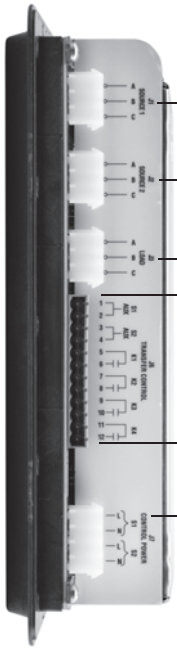

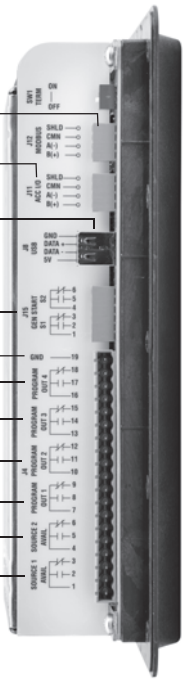

Configurable Inputs
System inputs are "wetted" contacts. System inputs can be configured to perform a preset list of functions. (Note: A factory configured input cannot be reconfigured in the field if the factory provides associated hardware.)

Factory Use Only
The sensing inputs are the connection points for monitoring Source 1, Source 2, and the Load. Three-phase systems are connected to Phase A, B and C. Single-phase systems are connected to points Phase A and Phase B.

Factory Use Only
- Source 1 and Source 2 auxiliary: These inputs are connected to the power switching devices position indication contacts
- K1, K2, K3 and K4: These Form-A output contacts are utilized to control the power switching mechanism. They operate in conjunction with the Source 1 and 2 auxiliary inputs

Control Power Inputs (Source 1 and Source 2)
The control power input range is 65–145 Vac, 50/60 Hz, 9–36 Vdc.

RS-422

DCT Module

RS-232 (ATC-900 ECAM)

Modbus 485

Accessory I/O Port

USB Port

Generator start
Form-C contact. This is a latching relay utilized to initiate startup and shutdown cycles of the engine/generator set. The GENERATOR START contact is rated 5 amperes at 250 Vac/30 Vdc.

Earth Ground
Provides a connection point for the common system ground.

Configurable Outputs
Four Form C dry relay contacts that can be configured to perform a preset list of functions. Contacts are rated 10 amperes at 250 Vac/30 Vdc. **Note:** A factory-configured output cannot be reconfigured in the field if the factory provides associated hardware)

Source 1 and Source 2 Available
Form C dry relay contacts that indicate Source 1 and Source 2 availability based on the programmed voltage and frequency set points. Contacts are rated 10 amperes at 250 Vac/30 Vdc.

ATC-900 Features

Features	ATC-900
Hardware	
4.3-inch color TFT LCD display	■
UV-resistant faceplate	■
Mimic diagram and LED status indicators	■
Suitable for application over a wide range of environmental conditions	■
Positive feedback membrane pushbuttons for application in harsh environments	■
Help function for detailed description of displayed message	■
Password protected system test pushbutton	■
Bypass time delay pushbutton	■
Form C engine start contact for Source 1 and Source 2	■
S1 and S2 available Form C contacts	■
Self-diagnostic and system diagnostic functions with LED indication	■
DC power input	Optional
Metering	
True rms voltage sensing of Source 1, Source 2 and Load	■
Frequency sensing of Source 1, Source 2 and Load	■
Voltage unbalance and phase rotation sensing	■
Load current sensing	Optional
Sampling at 64 samples per cycle	Optional
Source 1 voltages (three-phase)	■
Source 2 voltages (three-phase)	■
Load voltages (three-phase)	■
Source 1 frequency	■
Source 2 frequency	■
Load frequency	■
Load currents (three-phase)	Optional
Load kW	Optional
Load kvar	Optional
Load kVA	Optional
PF	Optional
Programming	
Programmable set points stored in nonvolatile memory	■
System monitoring with historical data storage and display	■
Digital set points for accurate and consistent performance	■
Password-protected access to control functions and set point programming	■
Four programmable control inputs	■
Four programmable control outputs	■
Expandable I/O modules (up to 20 I/O total)	Optional
Automatic plant exerciser—two plant exerciser schedules, Off, daily, 7-day, 14-day, 28-day, calendar, separate TDNE, TDEN, TDEC timers from normal operation, control input provided for remotely initiating an engine test	■
Communications	
Modbus RTU	■
Modbus TCP/IP	Optional
USB port for set point configuration and event-recording downloads	■
Event History	
320 time-stamped events	■
2 seconds of metered data stored before and after a transfer event	Optional

ATC-900 Programmable Set Points

The table below lists only controller features; switch features are not listed, as they are defined by switch construction. Transition settings are specific to the transfer switch construction.

Features and Set Points

Option Number	Description	Range	Factory Default
General Settings			
—	Set new password	0000–9999	0900
—	Selected language	English, French or Spanish	English
—	Nominal frequency	50 or 60 Hz	As ordered
—	Nominal voltage	110–600 V	As ordered
—	Number of phases	1 or 3	As ordered
—	Number of generators	0, 1 or 2	1
—	Preferred source	Source 1 or Source 2	Source 1
—	PT ratio	2:1–500:1	As ordered
—	CT ratio	200–5000	—
—	Daylight saving time	On or Off	1
—	Operating mode	Stand-alone/master or slave	Master
—	Phase sequence check	ABC, CBA or Off	Off
—	Commitment to transfer in TDNE	Yes or no	No
—	Manual retransfer	Auto, manual or external	As ordered
—	Modbus address	1–247	1
—	Modbus baud rate	0 = 9600, 1, even	9600
		1 = 9600, 1, odd	—
		2 = 9600, 2, none	—
		3 = 9600, 1, none	—
		4 = 19,200, 1, even	—
		5 = 19,200, 1, odd	—
		6 = 19,200, 2, none	—
		7 = 19,200, 1, none	—
Transition Settings			
47	Closed transition		
	Closed transition On or Off	On or Off	As ordered
	Closed voltage difference	1–5%	2%
	Closed frequency difference	0.0–0.3 Hz	0.3
32f/32d	Open—in-phase transition		
	In-phase—On or Off	Disable, in-phase default to alarm, in-phase default to open transition	As ordered
	In-phase frequency difference	0.0–3.0 Hz	1.0
—	Synchronization timer	1–60 minutes	5
32a/32d	Open—delayed transition		
	Time delay neutral	0–120 seconds	0
	Load voltage decay	2–30% of nominal voltage	6%
Time Delays			
1a	Time delay normal to emergency	0–9999 seconds	0:00
3a	Time delay emergency to normal	0–9999 seconds	5:00
35A	Time delay pre-transfer	0–120 seconds	0:01
35C	Time delay post-transfer	0–120 seconds	0:10
2A	Time delay engine 1 start	0–120 seconds	0:03
—	Time delay engine 2 start	0–120 seconds	0:03
4A	Time delay engine cool-off	0–9999 seconds	5:00
7A	Time delay engine fail timer	0–6 seconds	0:06
—	Voltage unbalance time delay	10–30 seconds	0:30

Features and Set Points, continued

Option Number	Description	Range	Factory Default
Source Settings			
26P	Source 1 undervoltage dropout	70–97% of nominal	80%
	Source 1 undervoltage pickup	(dropout + 2%) to 99% of nominal	90%
5P	Source 2 undervoltage dropout	70–97% of nominal	80%
	Source 2 undervoltage pickup	(dropout + 2%) to 99% of nominal	90%
26K	Source 1 overvoltage dropout	105–120% of nominal (0 = disabled)	115%
	Source 1 overvoltage pickup	103% of nominal to (dropout –2%) (0 = disabled)	105%
5K	Source 2 overvoltage dropout	105–120% of nominal (0 = disabled)	115%
	Source 2 overvoltage pickup	103% of nominal to (dropout –2%) (0 = disabled)	105%
26J	Source 1 underfrequency dropout	90–97% of nominal (0 = disabled)	94%
	Source 1 underfrequency pickup	(dropout + 1 Hz) to 99% of nominal (0 = disabled)	96%
5J	Source 2 underfrequency dropout	90–97% of nominal (0 = disabled)	94%
	Source 2 underfrequency pickup	(dropout + 1 Hz) to 99% of nominal (0 = disabled)	96%
26N	Source 1 overfrequency dropout	103–110% (0 = disabled)	106%
	Source 1 overfrequency pickup	101% to (dropout –1 Hz) (0 = disabled)	104%
5N	Source 2 overfrequency dropout	103–110% (0 = disabled)	106%
	Source 2 overfrequency pickup	101% to (dropout –1 Hz) (0 = disabled)	104%
26L	Source 1 percent for unbalanced voltage dropout	5–20% of phase-to-phase voltage unbalance (0 = disabled)	12%
	Source 1 percent for unbalanced voltage pickup	3% to (dropout –2%) (0 = disabled)	10%
5L	Source 2 percent for unbalanced voltage dropout	5–20% of phase-to-phase voltage unbalance (0 = disabled)	12%
	Source 2 percent for unbalanced voltage pickup	3% to (dropout –2%) (0 = disabled)	10%
Engine Test/Plant Exerciser (PE1 and PE2 are independently programmable)			
6B	Engine test pushbutton on panel		
	Test mode	No load, load transfer, disabled	Load transfer
	Engine run test time	0–600 minutes	Load transfer
23M	PE time delay normal to emergency	0–9999 seconds	1 minute
	PE time delay emergency to normal	0–9999 seconds	1 minute
	PE time delay engine cooldown	0–9999 seconds	5 minutes
	PE1/PE2 test mode	No load, load transfer, disabled	Disabled
	PE1/PE2 run time	0–600 minutes	30 minutes
	PE1/PE2 schedule	Off, daily, 7-day, 14-day, 28-day or calendar date (up to 12 user-specified dates)	30 minutes
	PE1/PE2 calendar date	Month: 1–12; Day: 1–31	30 minutes
	PE1/PE2 day of week	1 Sunday, 2 Monday, 3 Tuesday, 4 Wednesday, 5 Thursday, 6 Friday or 7 Saturday	30 minutes
	PE1/PE2 plant start time	HH:MM AM/PM	30 minutes
Accessory I/O			
—	Accessory I/O modules	0–4	—

Flexible Configuration

Designed for scalability, the ATC-900 can be configured for a wide variety of applications. A mix-and-match approach to features allows the user to build a transfer switch controller that meets the precise application needs.

The ATC-900 controller includes four user configurable inputs and outputs. The inputs and outputs can be assigned functions from a predefined list of options either at the factory or in the field.

- Inputs
  - Monitor mode
  - Bypass timers
  - Lockout
  - Manual retransfer On or Off
  - Manual retransfer
  - Slave in
  - Remote engine test
  - Preferred source selection
  - Go to emergency
  - Emergency inhibit
  - ATS on bypass
  - Go to neutral
- Outputs (control)
  - Load sequence
  - Selective load shed
  - Load bank control
  - Pre-/post-transfer
  - Pre-transfer
  - Post-transfer
  - User remote control
- Outputs (status/alarms)
  - Source 1 available (standard)
  - Source 2 available (standard)
  - Source 1 connected
  - Source 2 connected
  - ATS not in automatic
  - General alarm
  - ATS in test
  - Engine test aborted
  - Cooldown in process
  - Engine start contact status
  - Generator 1 start status
  - Generator 2 start status
  - Emergency inhibit on
  - ATS on bypass

Additional I/O can be added at any time by adding an external I/O module. Each I/O module contains four inputs and outputs and up to four modules can be daisy chained to the ATC-900 controller.

I/O Module—The ATC-900 optional I/O module provides users with four additional assignable inputs and outputs. Up to four I/O modules can be added to an ATC-900 controller providing a total of 20 inputs and outputs.

ATC-900 Metering

ATC-900 Main Screen Shows Current Values

The DCT module incorporates a current transformer interface to the ATC-900, allowing current to be metered along with voltage and frequency. Combined with the ATC-900, the DCT module serves as a multi-function power meter and provides measurement of the listed electrical parameters. Readings are displayed on the ATC-900 controller display or can be monitored through Modbus 485.

DCT Module Attached

Current Voltage Frequency Metering Data

Metering	Units	Accuracy	Notes
Current			
IA, IB, IC	Amps	±1% of reading	Accuracy range 5–100%
Voltage			
VAB, VBC, VCA	Volts	±1% of reading	Applicable to volt range of 34–721 Vac
Frequency			
Frequency	Hz	±0.2 Hz of reading	Range is 20–255 Hz

Power and Energy Metering Data

Power Metering	Units	Accuracy	Notes
Power	kW	±2% of reading	Approx. 1-second update
kVA	kVA	±2% of reading	Approx. 1-second update
kvar	kvar	±2% of reading	Approx. 1-second update
PF (power factor)	—	0 to ±1.00	—

Features

Feature Overview	Integrated ATC-900 Meter
Instrumentation	
Current, per phase	■
Current Demand	—
Voltage, per phase (L-L)	■
Min. Max. Readings	—
Frequency	■
Power	
Real, reactive and apparent power total (W,VAR,VA)	■
Power factor, total	■
Energy	
Real, reactive and apparent energy, total (Wh,VAR,VAh)	—
Communications	
RS-485, Modbus RTU, Modbus ASCII	■

Voltage Inputs (measurement category)

Range: universal, auto-ranging up to 416 Vac L–N, 721 Vac L–L
Supported hookups: 3-element wye or delta
Input impedance: 2 m ohm/phase
Burden: 0.0022 VA/phase at 120 V
Fault withstand: meets IEEE C37.90.1

Current Inputs

5 A nominal, 10 A maximum
Burden: 0.005 VA per phase maximum at 11 A
Pickup current: 0.1% of nominal
Connections: screw terminals
Maximum input wire gauge: AWG #12/2.5 mm^2
Fault withstand: 100 A/10 seconds, 300 A/3 seconds, 500 A/1 second

Isolation

All inputs are isolated to 2600 Vac

Measurement Methods

Voltage, current: true rms
Power: sampling at 64 samples per cycle on all channels measured readings simultaneously
A/D conversion: 16 simultaneous 12-bit analog to digital converters

Load Metering

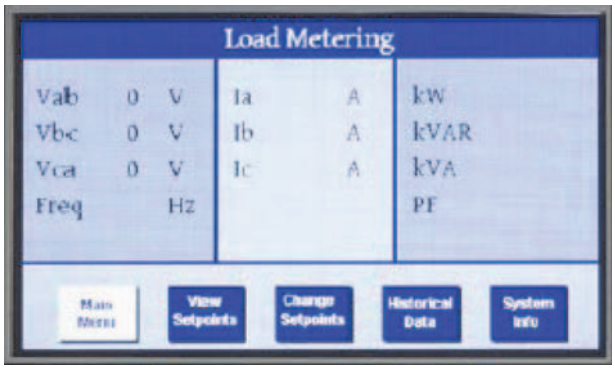

Diagnostics and Troubleshooting

In a mission-critical application, a failure to transfer to the backup power system requires quick and decisive action. Eaton's ATC-900 controller provides users with the data required to quickly identify the root cause of a backup power system failure and minimize system downtime. This data allows the user to identify a specific event and obtain the detailed event information including a step by step breakdown of the transfer sequence.

Historical Data

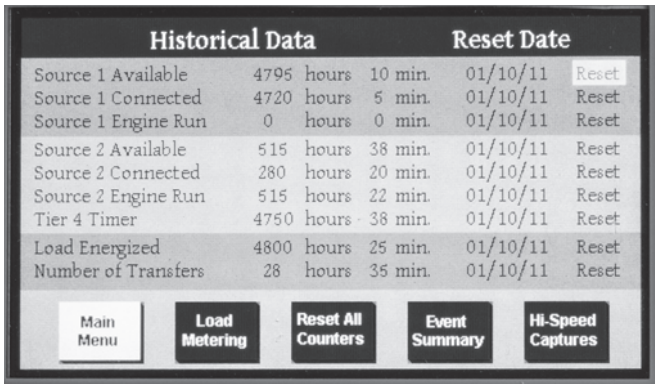

Historical Data Display

The historical data display indicates historical and cumulative counter values as follows:

- Source 1 available
- Source 1 connected
- Source 1 engine run
- Source 2 available
- Source 2 connected
- Source 2 engine run
- Tier IV timer
- Load energized
- Number of transfers

Historical counter resets are date and time-stamped events that are captured in the event log.

Event Summary

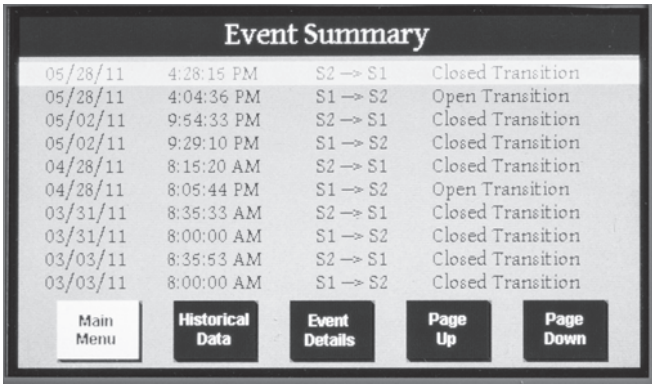

Event Summary Display

The ATC-900 controller stores 100 transfer summaries, 350 transfer details, 100 alarms and 20 time adjustments.

Events include:

- Actions of the transfer sequence
- Alarms
- Changes to the set points
- Changes to the time/date
- Resetting a historical counter
- Engine run test
- Time-stamping resolution of 1 second.

Event Details

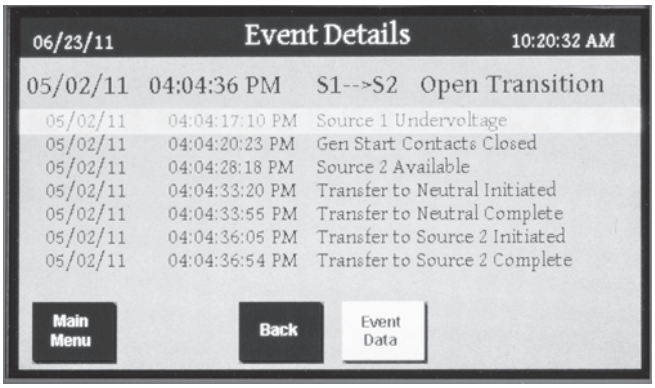

Event Details Display

Each transfer event can be exploded to view a step by step, time stamped, sequence of operation for a transfer event. All metered values are also logged for each event and can be viewed on the event data screen. Time stamping resolution of 0.1 seconds.

Hi-Speed Capture

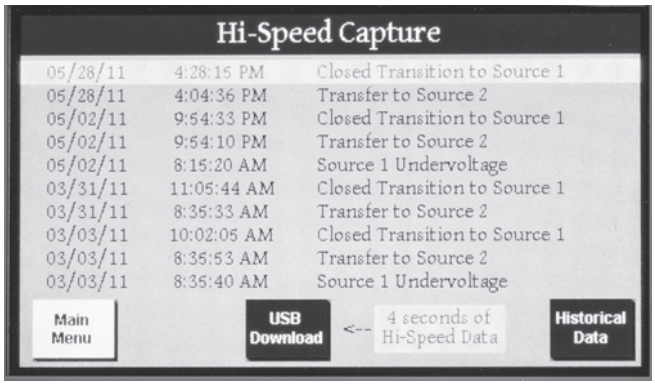

High Speed Capture Display, Pre and Post Event

The ATC-900 stores metered data updated on a continuous 20 millisecond basis for specific events. The data is captured 2 seconds before and 2 seconds after the event (except for a power failure, which is 4 seconds before). Oscillographic data for 10 events is stored in the controller and may be downloaded over USB or displayed graphically.

- Events include:
- Source unavailability actions that initiate a transfer sequence (undervoltage, overvoltage, etc.)
- Successful transfers (at the point of breaker/contactor closure)
- Unsuccessful transfers (at the point of breaker/contactor failure to close or open)

Industry Standard Communication Protocol

Every ATC-900 controller includes a standard Modbus RTU communications interface with an option to upgrade to Modbus TCP/IP.

The ATC-900 is also compatible with Eaton's Power Xpert Gateway for web-based monitoring, Modbus TCP/IP, SNMP, or BACnet/IP. The Power Xpert Gateway can be used to consolidate data from up to 64 devices, including communications ready transfer switch controllers, trip units and meters, as well as other Eaton devices. Versions of the Power Xpert Gateway include email event notification sand data-logging functionality.

HMi Remote Annunciator and Controller

The HMi Remote Annunciator and Controller monitors and controls up to eight transfer switches on a 7-inch LCD touch screen. It is compatible with either Modbus RTU or Modbus TCP/IP protocols. A basic mimic bus for each transfer switch displays source availability, source connected and preferred source. Users can drill down to metered source values and event history for each transfer switch. All control features are password-protected and include engine test, transfer to emergency (peak shaving), manual retransfer and bypass time delays.

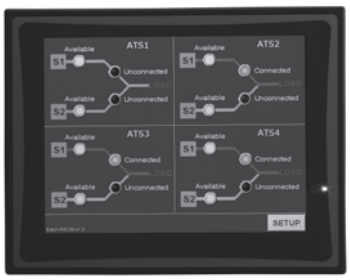

HMi Remote Annunciator and Controller

USB Programming Port

Every ATC-900 transfer switch includes a front panel, NEMA 4X rated USB port for use in configuring set points or downloading event data to a USB flash drive. To reduce the time spent on site for commissioning, set points can be configured at a PC using the ATC-900 configuration software and saved to a USB flash drive to be uploaded to one or multiple controllers. Set points are also easily copied from one controller to another.

Downloading event capture data provides the user the ability to more thoroughly analyze high-speed capture data using a PC, or data can be emailed to Eaton's Technical Support Team when off site troubleshooting support is required.

USB Programming Port

Power Xpert Architecture with ATC-900

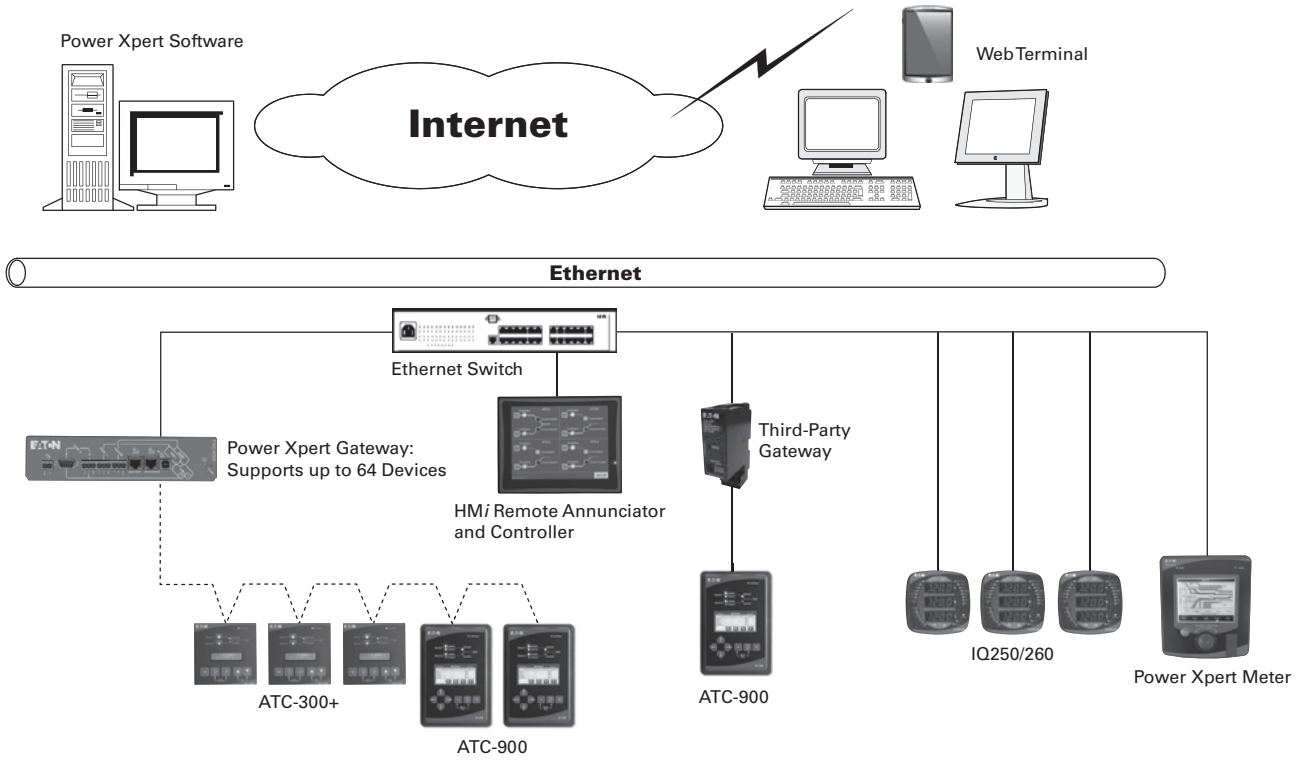

Special Applications

Three-Source ATS Control

The ATC-900 Master/Slave controller functionality provides the user with the ability to use two independent transfer switches in three-source systems consisting of a utility and two generator sources. In a three-source system, the Master ATS controls the engine starting and stopping of the Slave ATS.

In the event of a Source 1 power failure, the Master ATS engine start relay closes signaling the Slave ATS to start both generators. (Note: The Slave ATS requires continuous power using either the DCT Module for a DC power input or a UPS input.) The Master ATS handles all transfer time delays between the utility to generator transfer. If the preferred generator does not start within the programmed time delay, the Slave ATC-900 will initiate a transfer to the non-preferred generator. If "None Preferred" is selected, then both generators will start and the Slave ATS will transfer to the first generator source available. The ATC-900 will sense the load is connected to a good source and shut down the second generator.

Load Management

The ATC-900 includes several features to enhance the user's ability to manage load while on the alternate source.

- Integrated load metering: provides metering data that allows the user to monitor energy utilization and manage system loading
- Selective load shedding: selectively drop non-essential loads when a user-defined kW level is reached. The transfer switch remains on generator
- Load shed to neutral (where ATS construction allows): provides the ability to load shed to a neutral position from a generator source
- Pre-/post-transfer signals: provides the ability to stop select loads during the transfer process
- Load bank disable output: disengages a load bank if utility power is lost during an engine test

Three-Source Transfer Switch Arrangement

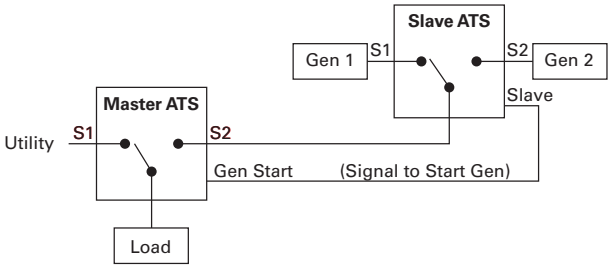

Technical Data and Specifications

Technical Specifications

Parameter	Specification
Control power	120 Vac (50/60 Hz) (operating range 65–160 Vac) or 24 Vdc (±10%) with DCT module
Power consumption	18 VA
Environmental conditions	
Operating temperature	–4 to +158 °F (–20 to +70 °C)
Operating humidity	Up to 90% relative humidity (noncondensing)
Enclosure compatibility	NEMA 12 (standard mounting) NEMA 4/4X (mounted with gasket between panel and device faceplate) NEMA 3R (outdoor) UV resistant ATC-900 faceplate
System voltage application	120–600 Vac (50/60 Hz) (single- or three-phase)
Voltage measurements	Source 1, Source 2 and Load (VAB, VBC, VCA for three-phase system)
Voltage measurement range	0–700 Vac
Voltage measurement accuracy	±1% of reading
Frequency measurements	Source 1 and Source 2
Frequency measurement range	40–80 Hz
Frequency measurement accuracy	±0.1 Hz
Applicable testing	UL recognized component 2009 IBC, 2010 CBC and OSHPD certified in ATS assemblies Complies with UL 991 environmental tests Complies with IEC 61000-4-2, 61000-4-3, 61000-4-4, 61000-4-5 and 61000-4-6 Complies with CISPR 11, Class A Complies with FCC Part 15, Subpart B, Class A
CSA conformance	C22.2 No. 178-1978 (reaffirmed 1992)
CE mark	European standards conformance

Dimensions

Approximate Dimensions in Inches (mm)

ATC-900

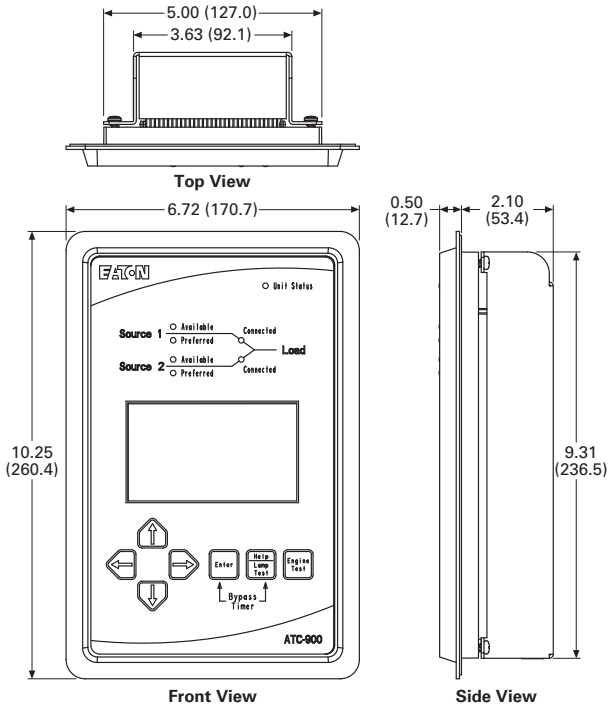

Additional Information

Instruction bulletin: IB01602088E

Web-based demo: www.eaton.com/ats

Controller Replacement Guide

Contents

Description	*Page*
Product Selection Guide	**V2-T5-66**
ATC-100 Controller	**V2-T5-70**
ATC-300+ Controller	**V2-T5-72**
ATC-900 Controller	**V2-T5-76**
Controller Replacement Guide	
ATC-100 Controller Replacement Kits	**V2-T5-87**
ATC-300 Controller Replacement Kits	**V2-T5-88**
ATC-300+ Controller Replacement Kits	**V2-T5-88**
ATC-600 and ATC-800 Controller Replacement Kits	**V2-T5-89**
Feature List	**V2-T5-90**
Feature List Steps	**V2-T5-90**

Controller Replacement Guide

Product Description

Automatic Transfer Switch Controller Replacement

Eaton automatic transfer switches use several different controller types. These automatic transfer controllers (ATCs) may be ordered as replacement for current manufacturer's existing automatic transfer switches. If vintage analog controller or controller parts are needed, then a separate renewal part data list needs to be referenced. The intent of this section is to address current controllers as listed in the table below.

It is important to note that the same controller type can be used on different switch types and the factory programmed firmware/ options will vary depending on the switch type. Thus it is very important to know the original switch type in order to select the correct controller replacement kit. If there is a question on which kit to select, then providing the factory with the original general order number and/or the 15-character catalog number will eliminate any doubts regarding the correct kit selection.

Automatic Transfer Controllers

Controller Type	Order via Style Number Only	Order via Replacement Kit Style Number and Feature List ①
ATC-100	See ATC-100 Replacement Kits table on the right	
ATC-300		Superseded by ATC-300+
ATC-300+		See ATC-300 Replacement Kits, **Page V2-T5-88**
ATC-600		See ATC-600/800 Replacement Kits, **Page V2-T5-89**
ATC-800		See ATC-600/800 Replacement Kits, **Page V2-T5-89**
ATC-900		ATC-900 Controller Replacement Guide, **Page V2-T5-91**

ATC-100 Controller Replacement Kits

The ATC-100 controller is primarily used on residential and light commercial applications up to 400 A. This controller may be used with either contactor-based or molded-case switch designs. The ATC-100 is only used on open transition type transfers. Replacement kits are ordered by style number (see table below).

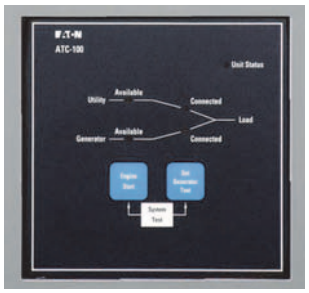

ATC-100

ATC-100 Replacement Kits

Switch Type	Controller Type	Replacement Style Number
Magnum-Based Design		
ATC-100 controller is not available	—	—
Breaker-Based Design		
Breaker open transition	ATC-100	**8160A00G23**
Contactor-Based Design		
2-position open transition	ATC-100	**8160A00G24**
2-position closed transition	—	—
3-position open transition	—	—
3-position closed transition	—	—

Note

① Feature list required upon order entry.

ATC-300 Controller Replacement Kits

The ATC-300 controller has been in use for many years and was applied on molded-case switch units up to 1000 A and contactor-based automatic transfer switches up to 1200 A. In 2012, the ATC-300 was replaced by the ATC-300+ controller. An ATC-300+ replacement kit is used for replacement of older ATC-300s. When ordering the replacement kit, it is very important to identify that the existing application is either a molded-case switch design, a breaker-based design (has the lockout feature), or a contactor 2-position or 3-position design.

The ATC-300+ has two features—Emergency Inhibit and Manual Retransfer—that were not available on the ATC-300. If these features were not previously supplied with the ATC-300, then the end user does not have to use these additional features. In addition, the ATC-300+ has communication capability for providing Modbus 485.

The ATC-300 and ATC-300+ have identical size and mounting dimensions. The J8 pin is now an 8-pin connector versus a 4-pin connector on the older ATC-300. J8 pins 5–6 and 6–8 are the connections for Emergency Inhibit and Manual Retransfer. The replacement kit includes the 8-pin connector.

ATC-300+ Controller Replacement Kits

The ATC-300+ controller was first used in 2012 for molded-case switch, breaker-based (with lockout feature) and open transition contactor-based (2-position and 3-position) designs. It is also used as the replacement kit for older ATC-300 controllers. It is critical to identify the application that needs a replacement kit. The ATC-300+ is NOT used on closed transition designs.

The ATC-300+ controller will have the lock out feature enabled. If not required, then the feature is jumpered out.

Ordering the breaker-based kit does not assure that the lockout feature (option 16) will be supplied. A note needs to be supplied with the order entry.

The controllers have a style number (typically 6D32360Gxx) on the back of the board. This style number is the board level style used in the controller. IT WILL NOT identify what controller replacement kit will be needed.

If there is trouble identifying the correct controller type, pressing the Help button will provide a scrolling Rev number, Firmware ID number and a series of catalog numbers that an Eaton factory representative can use for identification. The catalog number will be a series of 1s and 0s.

ATC-300 Replacement Kits

Switch Type	Controller Type	Replacement Style Number ①
Magnum-Based Design		
ATC-300+ controller is not available	—	—
Breaker-Based Design		
Breaker open transition	ATC-300+	**8160A00G100** ②
Contactor-Based Design		
2-position open transition	ATC-300+	**8160A00G104**
2-position closed transition	—	—
3-position open transition	ATC-300+	**8160A00G108**
3-position closed transition	—	—

Examples: Replacement Kit Style Number Selection

Example 1—Breaker-Based Design
Review 5th and 6th character in the ATS 15-character catalog number.

- If the 5th and 6th character is FD, KD, LD, MD, NB, then select 816000G100
- Example: ATV3**KD**A30300XSU implies 8160A00G100

Example 2—Contactor-Based Design
Review 5th and 6th character to determine if the ATS is a two-position or a three-position, and then select replacement kit accordingly.

Note: C2 is two-position and C3 or C5 is a three-position.

- Example: ATC3**C2**X30200XSU implies 8160A00G104
- Example: ATC3**C3**X30400XSU implies 8160A00G108
- Example: ATC3**C5**X30600XSU implies 8160A00G108

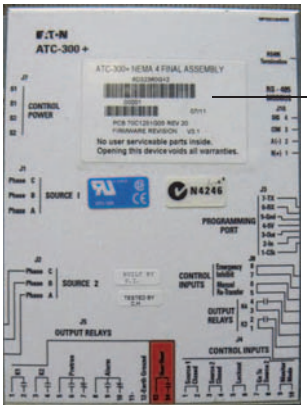

ATC-300+ Rear View

ATC-300+ PCB Style Number

6D32360Gxx

Note: This style number will not identify the replacement kit. The ATS catalog number is required to identify the replacement kit. The 15-character catalog number is on the ATS nameplate located on interior door of the ATS.

Notes

① The replacement style number 8160A00Gxx will include the printed circuit board style number (6D32360Gxx) shown on back of the controller.

② Identify if lockout feature 16 is required.

ATC-600 and ATC-800 Controller Replacement Kits

The ATC-600 is used on molded-case switch and breaker-based designs up to 1000 A. It is also used on open transition Magnum power case switch and breaker designs up to 5000 A.

The ATC-800 has been used on closed transition Magnum power case switch and breaker-based designs up to 5000 A. The ATC-800 is currently being used on open and closed transition contactor-based designs up to 1200 A.

Older automatic transfer switches may have used what is referred to as IQ Controllers. Controller replacements for those units can be ordered as ATC-600 for open transition and ATC-800 for closed transition.

In some cases, both the ATC-600 and ATC-800 controllers have been used on medium voltage transfer switches.

When ordering the replacement kit, always provide the original GO# of the ATS to correctly identify the features supplied with the controller. This feature set will then be used to program the replacement controller.

See the table below for the replacement kit style numbers for automatic transfer switches with ATC-600 or ATC-800 controllers. Because each controller was specifically supplied with the standard features and any order-specific optional features, there is no practical way to create a replacement kit style number for each variation of the features supplied. Thus, when ordering the replacement kit 8160A00GXX, the job-specific controller features must be specified. Order-specific features need to be included with the order entry.

See Feature List Steps table on **Page V2-T5-90** for identifying the features to be supplied on the order entry.

On the back of the ATC-800/600 controllers is a style number similar to a 2D7858GXX. This style number only identifies the basic control board that is included in the replacement kit per the table on this page. The replacement kit style number listed on this page must be used to order the replacement kit.

Board Level Style Number 2D78580GXX

ATC-600/800 Replacement Kits

Switch Type	Controller Type	Replacement Style Number
Magnum-Based Design		
Magnum open transition	ATC-600	**8160A00G03** ①
Magnum open transition	ATC-600	**8160A00G41** ②
Magnum closed transition	ATC-800	**8160A00G05** ①
Magnum closed transition	ATC-800	**8160A00G42** ②
Breaker-Based Design		
Breaker open transition	ATC-600	**8160A00G03** ①
Breaker open transition	ATC-600	**8160A00G41** ②
Contactor-Based Design		
2-position open transition	ATC-800	**8160A00G43** ②
2-position closed transition	ATC-800	**8160A00G43** ②
3-position open transition	ATC-800	**8160A00G43** ②
3-position closed transition	ATC-800	**8160A00G43** ②

Type	Replacement Style Number
ATC-600/800 Connectors	
J4 19-pin	**67A2590H25**
J5 22-pin	**67A2590H26**
Source 1 4-pin	**1268C07H31**
Source 2 4-pin	**1268C07H31**
Load 4-pin	**1268C07H31**
J7 4-pin	**1268C07H31**

Notes

① Kit includes one J4 (19-pin), one J5 (22-pin), four 4-pin connectors (S1, S2, Load, J7 Power) and pins.

② Kit does not include any connectors/pins.

Feature List

The replacement controller needs to match the features originally supplied. The easiest way to supply this list is to provide the **original order number** from the original shipment. The ATS product line maintains a database with the original feature list. The general order (GO) number is on the ATS nameplate located on the inside of the door. In addition, it is very helpful to also supply the **15-digit ATS catalog number** that can be found on the ATS nameplate.

The existing controller also has a catalog number feature code that defines what features are included. Pressing the Help Lamp Test button will show this code on a scrolling display.

If this information is not supplied on order entry, then the order will be placed on manufacturing hold until the information is supplied.

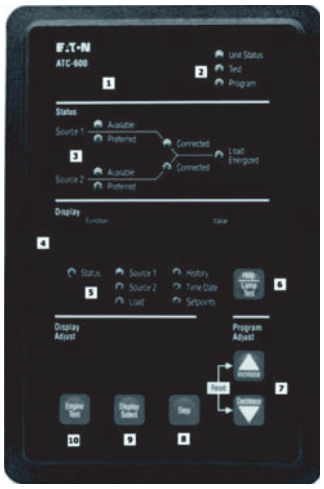

Feature code example (3f-e3-31-032)

Press Help Lamp Test button to initiate the Display Screen Readout

Feature List Steps

Step	Action
A.1	Identify replacement style number from table on **Page V2-T5-89**.
A.2	Identify original general order (GO) number. ①②
A.3	Order style number with GO information in the order notes. ③ If the original GO number is hard to identify or is unavailable, then one of the following steps below can be taken.
B.1	Provide the 9-digit feature code from the ATC-800 or ATC-600 controller. Feature code is viewable from ATC-600 or ATC-800 readout screen by pressing the Help button. Controller must be able to be powered up to view this feature code. On older controllers, the feature code may be 7 or 8 characters. Feature code example (3f-e3-31-032).
C.1	If the above information is not available, then provide a detailed listing of features to be supplied with the controller. The following questions must be answered.
	Switch Type
	Molded-case switch
	Power case switch, open transition
	Power case switch, closed transition
	Contactor open transition, 2-position
	Contactor open transition, 3-position
	Contactor closed transition, 2-position
	Contactor closed transition, 2-position
	Medium voltage WLI or breaker
	Medium voltage open transition
	Medium voltage closed transition
	Features
	5C source 2 O–F monitoring
	5E/G source 2 O–V monitoring
	Bypass TDEN/TDNE
	10 preferred source
	16 overcurrent trip
	23 plant exerciser
	Source 1 O–V monitoring
	26D go to emergency
	Source 1 U–F monitoring
	Source 1 O–F monitoring
	29J manual retransfer
	32A/B delayed transition
	32A TDN time delay neutral
	32B time delay load voltage
	32C in-phase/TDNLV
	32D in-phase/TDN
	35 pretransfer signal
	36 emergency inhibit
	37 service entrance
	45 remote sequencing
	46 PT ratio
	47C closed/in-phase transition
	47D closed transition only
	47E closed/in-phase/TDN
	47F closed/TDNLV

Notes

① Not replacement order number.

② If ATS is mounted in Eaton motor control center or Eaton switchboard, the ATS order number must be supplied, not the overall gear General Order number. This ATS order number is located on the ATS label.

③ If the original GO number is not supplied on order entry, then the order will be placed on manufacturing hold until the feature list is supplied.

ATC-900 Controller Replacement Guide

The ATC-900 controller is used on any of Eaton's automatic transfer switches. It can be used on contactor-based, molded case switch-based, and Magnum power case switch-based designs. In addition, the ATC-900 is used on either open or closed transition type switches. The ATC-900 controller is provided as a replacement controller for existing designs. The selection guide below provides the different style number replacement kits.

ATC-900 Replacement Kit Selector Table

Switch Type	Number of Positions	Transition	Style Number Kit
Contactor-based	3	Open	**8160A90G01**
Contactor-based	2	Open	**8160A90G07**
Contactor-based	3	Closed	**8160A90G13**
Bypass contactor-based	3	Open	**8160A90G19**
Bypass contactor-based	3	Closed	**8160A90G25**
Molded case switch-based	3	Open	**8160A90G31**
Magnum-based	3	Open	**8160A90G37**
Magnum-based	3	Closed	**8160A90G43**

In addition, the ATC-900 controller can be used to retrofit and upgrade existing automatic transfer switches using either an ATC-600 or an ATC-800 controller.

Refer to the controller field upgrade selection below. The upgrade kit includes the ATC-900 controller and the wire harness adapter kit.

Retrofit/Upgrade Selector Kit for ATC-600 or ATC-800

Switch Type	Style Number Kit
Contactor-based	**8160A91G01**
Molded case switch-based	**8160A91G01**
Magnum-based	**8160A91G01**
Bypass contactor	**8160A91G04**

ATC-900 (Top Left and Right Side Views)

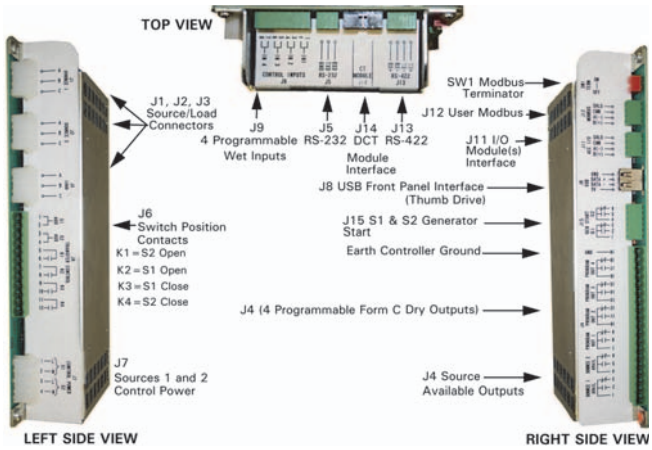

ATC-900 Mating Connectors (Plugs)

Connector Designation	Number of Pins	Connector Part Number
J1	3	**1268C07H41**
J2	3	**1268C07H41**
J3	3	**1268C07H41**
J4	19	**67A2590H25**
J5	3	**66A8190H01**
J6	12	**67A2590H32**
J7	4	**1268C07H31**
J8	USB	**M22-USB-SA**
J9	8	**66A8190H04**
J11	4	**66A8190H02**
J12	4	**66A8190H02**
J13	4	**66A8190H02**
J14	n/a	From DCT Module
J15	6	**66A8190H03**
DCT Module		
J18	2	**66A8190H05**
I/O Module		
J1 120 Vac Power	4	**1268C07H31**
J2 Inputs and GND	10	**67A2590H28**
J3 Communications	4	**66A8190H02**
J4 Outputs Form C	12	**67A2590H32**

Note

The connectors to the ATC- 900 can be ordered separately; however, connector kit style number 8160A92G01 can be ordered that includes connectors for J4, J6, J9, J11 and J15 plus the USB port.

Contents

Description ***Page***

Standard and Optional Features
- Contactor-Based—Automatic Transfer Switch Features **V2-T5-91**
- Breaker-Based—Automatic Transfer Switch Features **V2-T5-99**
- Magnum-Based—Automatic Transfer Switch Features **V2-T5-103**
- Feature Description **V2-T5-107**
- Glossary. **V2-T5-116**

Contactor-Based—Automatic Transfer Switch Features

		Open Transition									
		RLC1	ATC1	ATC3			ATC9			NTCE	
Feature Number	Description	C2	C2	C2	C3	C5	C2	C3	C5	C2	C3
Timers											
1	Time delay normal to emergency (TDNE) fixed 2 or 15 seconds	S	S	—	—	—	—	—	—	—	—
1A	Adjustable 0–1800 seconds	—	—	S	S	S	—	—	—	—	—
1B	Adjustable 0–9999 minutes	—	—	—	—	—	S	S	S	—	—
2	Time delay engine start (TDES) fixed 3 seconds	S	S	—	—	—	—	—	—	—	—
2A	Adjustable 0–120 seconds	—	—	S	S	S	S	S	S	—	—
3	Time delay emergency to normal (TDEN) fixed 5 minutes	S	S	—	—	—	—	—	—	—	—
3A	Adjustable 0–1800 seconds	—	—	S	S	S	—	—	—	—	—
3B	Adjustable 0–9999 minutes	—	—	—	—	—	S	S	S	—	—
4	Time delay engine cooldown (TDEC) fixed 5 minutes	S	S	—	—	—	—	—	—	—	—
4A	Adjustable 0–1800 seconds	—	—	S	S	S	—	—	—	—	—
4B	Adjustable 0–9999 minutes	—	—	—	—	—	S	S	S	—	—
Emergency (S2) Source Sensing											
5H	Phase reversal protection	—	—	S	S	S	S	S	S	—	—
5J	All phase undervoltage/underfrequency	S	S	S	S	S	S	S	S	—	—
5K	All phase overvoltage/overfrequency	—	—	S	S	S	S	S	S	—	—
5L	All phase voltage unbalance	—	—	S	S	S	S	S	S	—	—
5M	All phase voltage phase loss	—	—	—	—	—	S	S	S	—	—
5N	All phase overfrequency	—	—	—	—	—	S	S	S	—	—
System or Engine Test											
6B	Engine test pushbutton	S	S	S	S	S	S	S	S	—	—
6C	Remote engine test input	—	—	—	—	—	C	C	C	—	—
6D	Maintained 2-position test switch	—	—	—	—	—	O	O	O	—	—
6H	Maintained 4-position test switch	—	—	—	—	—	O	O	O	—	—
7	Time delay emergency fail (TDEF) fixed 6 seconds	S	S	—	—	—	—	—	—	—	—
7A	Adjustable 0–6 seconds	—	—	S	S	S	S	S	S	—	—
Pushbutton Bypass											
8C	Bypass TDEN	—	—	S	S	S	S	S	S	—	—
8D	Bypass TDNE	—	—	S	S	S	S	S	S	—	—
8E	Bypass TDNE/TDEN (input)	—	—	—	—	—	C	C	C	—	—
Maintenance Selector Switch											
9B	Electrical operator isolator switch	—	—	O	O	O	O	O	O	—	—

S = Standard, O = Optional, C = Configurable

Contactor-Based—Automatic Transfer Switch Features, continued

Feature Number	Description	Open Transition RLC1 C2	ATC1 C2	ATC3 C2	ATC3 C3	ATC3 C5	ATC9 C2	ATC9 C3	ATC9 C5	NTCE C2	NTCE C3
Preferred Source Selector											
	Preferred source selector (programmed)	—	—	—	—	—	S	S	S	—	—
10A	Preferred source selector input	—	—	—	—	—	C	C	C	—	—
10C	Preferred source selector with selector switch	—	—	—	—	—	O	O	O	—	—
10B	Utility to utility or utility to generator	—	—	—	—	—	S	S	S	—	—
10D	Generator to generator	—	—	—	—	—	S	S	S	—	—
Indicating Lights/LEDs											
12C	Normal (S1) source connected	S	S	S	S	S	S	S	S	S	S
12D	Emergency (S2) source connected	S	S	S	S	S	S	S	S	S	S
12G	Normal (S1) source available	S	S	S	S	S	S	S	S	S	S
12H	Emergency (S2) source available	S	S	S	S	S	S	S	S	S	S
12L	Normal (S1) source tripped (requires feature 16)	—	—	—	—	—	—	O	O	—	—
12M	Emergency (S2) source tripped (requires feature 16)	—	—	—	—	—	—	O	O	—	—
Source Available Contacts											
14C	Normal (S1) source available 4 Form C	—	—	O	O	O	O	O	O	O	O
14D	Emergency (S2) source available 4 Form C	—	—	O	O	O	O	O	O	O	O
14E	Normal (S1) source available 1 Form C	—	—	—	—	—	S	S	S	—	—
14F	Emergency (S2) source available 1 Form C	—	—	—	—	—	S	S	S	—	—
14G	Normal (S1) source available 2 Form C	—	S	S	S	S	O	O	O	S	S
14H	Emergency (S2) source available 2 Form C	—	S	S	S	S	O	O	O	S	S
Position Contacts											
15E	Normal (S1) source position 1 Form C	—	S	S	S	S	S	S	S	S	S
15F	Emergency (S2) source position 1 Form C	—	S	S	S	S	S	S	S	S	S
15G	Normal (S1) source position 3 Form C	—	O	O	O	O	O	O	O	O	O
15H	Emergency (S2) source position 3 Form C	—	O	O	O	O	O	O	O	O	O
15R	Normal (S1) source position 1 Form C (relay OUTPUT)	—	—	—	—	—	C	C	C	—	—
15S	Emergency (S2) source position 1 Form C (relay OUTPUT)	—	—	—	—	—	C	C	C	—	—
Integral Overcurrent Protection											
16N	Normal (S1) switch only	—	—	—	—	—	—	—	—	—	—
16E	Emergency (S2) switch only	—	—	—	—	—	—	—	—	—	—
16B	Normal (S1) and emergency (S2) switches	—	—	—	—	—	—	—	—	—	—
16S	Service equipment/overcurrent protection normal (S1) and emergency (S2)	O	—	—	—	—	—	—	—	—	—
Breaker with O/C Trip											
17N	Normal (S1) Breaker Only with 100% load rating	—	—	—	O	O	O	O	O	O	O
Metering (Specify normal (S1), emergency (S2) or load side for 18A thru E)											
18	Integrated load metering (DCT module)	—	—	—	—	—	O	O	O	—	—
18A	IQ 250/260	—	O	O	O	O	O	O	O	O	O
18B	PX4000/6000/8000	—	—	—	—	—	—	—	—	—	—
18D	IQ 130/140/150	—	O	O	O	O	O	O	O	O	O
18E	PXM2250/2260/2270	—	O	O	O	O	O	O	O	O	O
18J	Integrated metering (DCT module—load side only)	—	—	—	—	—	O	O	O	—	—
21A	Non-standard terminals	—	—	—	—	—	—	—	—	—	—
22	Ground bus	—	—	S	S	S	S	S	S	S	S
22C	Special ground bar—contact factory	—	—	—	—	—	—	—	—	—	—
22D	16 conductor ground bus 500 or 750 kcmil	—	—	—	—	—	—	—	O	—	—
Plant Exerciser											
23A	Selectable—disabled/7-, 14-, 28-day interval, fixed 15 minutes load/no load, with fail-safe	S	S	—	—	—	—	—	—	—	—
23K	Selectable—disabled 7-, 14-, 28-day interval, 0–600 minutes load/no load, with fail-safe	—	—	S	S	S	—	—	—	—	—
23L	24-hour, 7-day, 365-day programmable plant exerciser	—	—	O	O	O	—	—	—	—	—
23M	Selectable—disabled 7-, 14-, 28-, 365-day interval, 0–600 minutes load/no load, with fail-safe	—	—	—	—	—	S	S	S	—	—

S = Standard, O = Optional, C = Configurable

Contactor-Based—Automatic Transfer Switch Features, continued

Feature Number	Description	Open Transition RLC1 C2	ATC1 C2	ATC3 C2	C3	C5	ATC9 C2	C3	C5	NTCE C2	C3
Normal (S1) Source Sensing											
26D	Go to emergency (S2) input	—	—	S	S	S	C	C	C	—	—
26E	Go to emergency (S2) input with selector switch ①	—	—	—	—	—	—	O	O	—	—
26H	Phase reversal protection	—	—	S	S	S	O	S	S	—	—
26J	All phase undervoltage/underfrequency	—	—	S	S	S	S	S	S	—	—
26K	All phase overvoltage/overfrequency	—	—	S	S	S	S	S	S	—	—
26L	All phase voltage unbalance	—	—	S	S	S	O	S	S	—	—
26M	All phase voltage phase loss	—	—	—	—	—	S	S	S	—	—
26P	All phase undervoltage	S	S	—	—	—	—	—	—	—	—
Alternative Transfer Modes of Operation											
29G	Selector switch for auto or non-auto operation ①	—	—	O	O	O	O	O	O	—	—
29J	Manual (pushbutton) transfer E to N; automatic N to E ①	—	—	O	O	O	O	O	O	—	—
29L	Manual retransfer on/off input	—	—	—	—	—	C	C	C	—	—
29M	Manual retransfer on/off input with selector switch ①	—	—	—	—	—	O	O	O	—	—
29K	Manual retransfer input	—	—	—	—	—	C	C	C	—	—
Open Transfer Operation Modes											
32A	Time delay neutral adjustable 0–120 seconds (delayed transition)	—	—	—	S	—	—	C	C	—	—
32B	Load voltage decay adjustable 2–30% nominal voltage	—	—	—	—	—	—	C	C	—	—
32C	In-phase transition defaults to load voltage decay	—	—	—	—	—	—	C	C	—	—
32D	In-phase transition defaults to time delay neutral	—	—	—	—	S	—	—	—	—	—
32E	Delay transition timer adjustable 3–60 seconds	—	—	—	—	—	—	—	—	—	—
32F	In-phase transition	S	S	S	—	—	S	—	—	—	—
32G	Time delay neutral fixed 0 or 2 seconds (delayed transition)	—	—	—	—	—	—	—	—	—	—
Logic Extender Cable (Open Enclosures Only)											
34A	48 inches (1219 mm)	—	—	—	—	—	—	—	—	—	—
34C	96 inches (2438 mm)	—	O	O	O	O	—	—	—	O	O
34E	144 inches (3658 mm)	—	—	—	—	—	—	—	—	—	—
34F	100 inches (2540 mm) (fixed mount only)	—	—	—	—	—	—	—	—	—	—
35A	Pre-transfer signal contacts 1 Form C	—	—	S	S	S	C	C	C	—	—
35B	Pre-/post-transfer signal	—	—	—	—	—	C	C	C	—	—
36	Load shed from emergency (S2 inhibit)	—	—	—	S	S	C	C	C	—	—
36A	Load shed—S2 inhibit with keyed switch (INPUT)	—	—	—	—	—	O	O	O	—	—
37	Go to "isolated" position (not SE rated)	—	—	—	—	—	C	C	C	—	—
Suitable for Use as Service Equipment Requires 16B, N or S											
37A	Without ground fault protection	—	—	O	O	O	O	O	O	O	O
37B	With ground fault protection required at 1000 A or more if the electrical service is a solidly grounded wye system of more than 150 V to ground but not exceeding 600 V phase to phase	—	—	O	O	O	O	O	O	O	O
Stainless Steel Device Covers											
38A	SS cover for device plate or SE disconnect	—	—	O	O	O	O	O	O	O	O
38B	SS cover for controller	—	O	O	O	O	O	O	O	—	—
Space Heater with Thermostat											
41A	100 watts	—	O	O	O	O	O	O	O	O	O
41E	375 watts	—	—	—	—	—	—	—	—	—	—
42	IBC/CBC seismic qualified	S	S	S	S	S	S	S	S	S	S
Load Management Contacts											
45A–K	Load sequencing contacts (1)	—	—	—	—	—	C	C	—	—	—
45L	Selective load shed (assignable to multiple out put contacts)	—	—	—	—	—	C	C	C	—	—

S = Standard, O = Optional, C = Configurable

Note

① When these options are selected with the ATC-900 controller, the associated input or output will be factory fixed and cannot be reconfigured by the user.

Contactor-Based—Automatic Transfer Switch Features, continued

Feature Number	Description	Open Transition RLC1 C2	ATC1 C2	ATC3 C2	ATC3 C3	ATC3 C5	ATC9 C2	ATC9 C3	ATC9 C5	NTCE C2	NTCE C3
Communications											
48D	PXG400 gateway (includes Modbus)	—	—	O	O	O	O	O	O	—	—
48F	Modbus—MPONI module (PONI not required with ATC-300+)	—	—	O	O	O	—	—	—	—	—
48F	Modbus communication—no PONI required	—	—	S	S	S	S	S	S	—	—
48G	Modbus TCP/IP gateway	—	—	—	—	—	O	O	O	—	—
48P	Power supply for remote annunciator	—	—	O	O	O	O	O	O	—	—
48RAC	Remote annunciator with control (includes Modbus)	—	—	O	O	O	O	O	O	—	—
48MRAC	Remote annunciator with control multi-switch (includes Modbus)	—	—	O	O	O	—	—	—	—	—
48U	USB port	—	—	—	—	—	S	S	S	—	—
49A	Sensing isolation transformer Magnum	—	—	—	—	—	O	O	O	—	—
49B	Sensing isolation transformer	—	—	O	O	O	O	O	O	—	—
49C	Multi-tap voltage transformer (non AG only)	—	S	S	S	S	S	S	S	S	S
49C	Multi-tap voltage transformer (option only on fixed)	—	—	—	—	—	—	—	—	—	—
TVSS up to 480 V (Connected to Normal)											
51D1	50 kA—CVX	—	—	O	O	O	O	O	O	O	O
51F1	100 kA—CVX	—	—	O	O	O	O	O	O	O	O
Surge Protection Device with 12 ft Cable (on Normal)											
51S1	50 kA—SPD ①	—	—	—	—	—	—	—	—	—	—
51S2	80 kA—SPD ①	—	—	—	—	—	—	—	—	—	—
51S3	100 kA—SPD ①	—	—	—	—	—	—	—	—	—	—
51S4	120 kA—SPD ①	—	—	—	—	—	—	—	—	—	—
51S5	160 kA—SPD ①	—	—	—	—	—	—	—	—	—	—
51S6	200 kA—SPD ①	—	—	—	—	—	—	—	—	—	—
51S7	250 kA—SPD ①	—	—	—	—	—	—	—	—	—	—
51S8	300 kA—SPD ①	—	—	—	—	—	—	—	—	—	—
51S9	400 kA—SPD ①	—	—	—	—	—	—	—	—	—	—
52B	24 V generator battery power	—	—	—	—	—	—	—	—	—	—
52C	24 V onboard power supply (charger and batteries)	—	—	—	—	—	—	—	—	—	—
54B	Upgrade to 316 stainless steel	—	—	O	O	O	O	O	O	O	O
60	Control power transformer (240/120 V single-phase and 208 V only)	—	O	O	—	—	—	—	—	—	—
61A	UPS device	—	—	—	—	—	—	—	—	—	—
61B	UPS 120 Vac terminal block input	—	—	—	—	—	—	—	—	—	—
80A	Emergency (S2) inhibit contact	—	—	—	O	O	C	C	C	—	—
Monitoring Outputs											
81A	General alarm indication contact	—	—	—	—	—	C	C	C	—	—
81B	ATS not in automatic	—	—	—	—	—	C	C	C	—	—
81C	ATS in test	—	—	—	—	—	C	C	C	—	—
81D	Engine test aborted	—	—	—	—	—	C	C	C	—	—
81E	Cooldown in process	—	—	—	—	—	C	C	C	—	—
81F	Engine start contact status	—	—	—	—	—	C	C	C	—	—
81G	Emergency inhibit on	—	—	—	—	—	C	C	C	—	—
81GL	Emergency inhibit on with white indicating light ②	—	—	—	—	—	O	O	O	—	—
81H	ATS on bypass	—	—	—	—	—	C	C	C	—	—
Inputs											
81J	Lockout	—	—	—	—	—	C	C	C	—	—
81K	Monitor mode	—	—	—	—	—	C	C	C	—	—
81L	Remote load test	—	—	—	—	—	C	C	C	—	—
Three Source ATS Control (Master/Slave)											
90A	Master control output	—	—	—	—	—	C	C	C	—	—
90B	Slave input	—	—	—	—	—	C	C	C	—	—

S = Standard, O = Optional, C = Configurable

Notes

① Add feature package B or C (e.g., 51S4B).
B: LED indication and audible alarm, Form C contact, EMI/RFI filtering (standard)
C: B and surge counter with Reset button (standard with surge)

② When these options are selected with the ATC-900 controller, the associated input or output will be factory fixed and cannot be reconfigured by the user.

Contactor-Based—Automatic Transfer Switch Features, continued

Feature Number	Description	Open Transition BIC3 C	BIC3 D	BIC9 C	BIC9 D	Closed Transition CBC9 C	CBC9 D	CTC9 C3
Timers								
1A	Adjustable 0–1800 seconds	S	S	—	—	—	—	—
1B	Adjustable 0–9999 minutes	—	—	S	S	S	S	S
2A	Adjustable 0–120 seconds	S	S	S	S	S	S	S
3A	Adjustable 0–1800 seconds	S	S	—	—	—	—	—
3B	Adjustable 0–9999 minutes	—	—	S	S	S	S	S
4A	Adjustable 0–1800 seconds	S	S	—	—	—	—	—
4B	Adjustable 0–9999 minutes	—	—	S	S	S	S	S
Emergency (S2) Source Sensing								
5H	Phase reversal protection	S	S	S	S	S	S	S
5J	All phase undervoltage/underfrequency	S	S	S	S	S	S	S
5K	All phase overvoltage/overfrequency	S	S	S	S	S	S	S
5L	All phase voltage unbalance	—	—	O	O	O	O	O
5M	All phase voltage phase loss	—	—	S	S	S	S	S
5N	All phase overfrequency	—	—	S	S	S	S	S
System or Engine Test								
6B	Engine test pushbutton	S	S	S	S	S	S	S
6C	Remote engine test input	—	—	C	C	C	C	C
6D	Maintained 2-position test switch	—	—	O	O	O	O	O
6H	Maintained 4-position test switch	—	—	O	O	O	O	O
7A	Adjustable 0–6 seconds	S	S	S	S	S	S	S
Pushbutton Bypass								
8C	Bypass TDEN	S	S	S	S	S	S	S
8D	Bypass TDNE	S	S	S	S	S	S	S
8E	Bypass TDNE/TDEN (input)	—	—	C	C	C	C	C
Maintenance Selector Switch								
9B	Electrical operator isolator switch	O	O	O	O	O	O	O
Preferred Source Selector								
	Preferred source selector (programmed)	—	—	S	S	S	S	S
10A	Preferred source selector input	—	—	C	C	C	C	C
10C	Preferred source selector with selector switch	—	—	O	O	O	O	O
10B	Utility to utility or utility to generator	—	—	S	S	S	S	S
10D	Generator to generator	—	—	S	S	S	S	S
Indicating Lights/LEDs								
12C	Normal (S1) source connected	S	S	S	S	S	S	S
12D	Emergency (S2) source connected	S	S	S	S	S	S	S
12G	Normal (S1) source available	S	S	S	S	S	S	S
12H	Emergency (S2) source available	S	S	S	S	S	S	S
12L	Normal (S1) source tripped (requires feature 16)	—	—	O	O	O	O	O
12M	Emergency (S2) source tripped (requires feature 16)	—	—	O	O	O	O	O
Source Available Contacts								
14C	Normal (S1) source available 4 Form C	O	O	O	O	O	O	O
14D	Emergency (S2) source available 4 Form C	O	O	O	O	O	O	O
14E	Normal (S1) source available 1 Form C	—	—	S	S	S	S	S
14F	Emergency (S2) source available 1 Form C	—	—	S	S	S	S	S
14G	Normal (S1) source available 2 Form C	S	S	O	O	O	O	O
14H	Emergency (S2) source available 2 Form C	S	S	O	O	O	O	O

S = Standard, O = Optional, C = Configurable

Contactor-Based—Automatic Transfer Switch Features, continued

Feature Number	Description	Open Transition BIC3 C	BIC3 D	BIC9 C	BIC9 D	Closed Transition CBC9 C	CBC9 D	CTC9 C3
Position Contacts								
15E	Normal (S1) source position 1 Form C	S	S	S	S	S	S	S
15F	Emergency (S2) source position 1 Form C	S	S	S	S	S	S	S
15G	Normal (S1) source position 3 Form C	O	O	O	O	O	O	O
15H	Emergency (S2) source position 3 Form C	O	O	O	O	O	O	O
15R	Normal (S1) source position 1 Form C (relay OUTPUT)	—	—	C	C	C	C	C
15S	Emergency (S2) source position 1 Form C (relay OUTPUT)	—	—	C	C	C	C	C
Integral Overcurrent Protection								
16N	Normal (S1) switch only	—	—	—	—	—	—	—
16E	Emergency (S2) switch only	—	—	—	—	—	—	—
16B	Normal (S1) and emergency (S2) switches	—	—	—	—	—	—	—
16S	Service equipment/overcurrent protection normal (S1) and emergency (S2)	—	—	—	—	—	—	—
Metering (Specify normal (S1), emergency (S2) or load side for 18A thru E)								
18	Integrated load metering (DCT module)	—	—	O	O	O	O	O
18A	IQ 250/260	O	O	O	O	O	O	O
18B	PX4000/6000/8000	—	O	—	—	—	—	—
18D	IQ 130/140/150	O	O	O	O	O	O	O
18E	PXM2250/2260/2270	O	O	O	O	O	O	O
18J	Integrated metering (DCT module—load side only)	—	—	O	O	O	O	O
20A	Rear bus connections	—	—	—	—	—	—	—
21A	Non-standard terminals (optional in IES for centers)	—	—	—	—	—	—	—
22	Ground bus	S	S	—	—	—	—	—
22C	Special ground bar—contact factory	—	—	—	—	—	—	—
22D	16 conductor ground bus 500 or 750 kcmil	O	O	O	O	O	—	—
Plant Exerciser								
23A	Selectable—disabled 7-, 14-, 28-day interval, fixed 15 minutes load/no load, with fail-safe	—	—	—	—	—	—	—
23K	Selectable—disabled 7-, 14-, 28-day interval, 0–600 minutes load/no load, with fail-safe	S	S	—	—	—	—	—
23L	24-hour, 7-day, 365-day programmable plant exerciser	O	O	—	—	—	—	—
23M	Selectable—disabled 7-, 14-, 28-, 365-day interval, 0–600 minutes load/no load, with fail-safe	—	—	S	S	S	S	S
Normal (S1) Source Sensing								
26D	Go to emergency (S2) input	S	S	C	C	C	C	C
26E	Go to emergency (S2) input with selector switch ①	—	—	O	O	O	O	O
26H	Phase reversal protection	S	S	S	S	S	S	S
26J	All phase undervoltage/underfrequency	S	S	S	S	S	S	S
26K	All phase overvoltage/overfrequency	S	S	S	S	S	S	S
26L	All phase voltage unbalance and phase loss	—	—	O	O	O	O	O
26L	All phase voltage unbalance	S	S	S	S	S	S	S
Alternative Transfer Modes of Operation								
29D	Dual ATS bypass	S	S	S	S	S	S	—
29G	Selector switch for auto or non-auto operation ①	O	O	O	O	O	O	O
29J	Manual (pushbutton) transfer E to N; automatic N to E ①	O	O	O	O	O	O	O
29L	Manual retransfer on/off input	—	—	C	C	C	C	C
29M	Manual retransfer on/off input with selector switch ①	—	—	O	O	O	O	O
29K	Manual retransfer input	—	—	C	C	C	C	C

S = Standard, O = Optional, C = Configurable

Note

① When these options are selected with the ATC-900 controller, the associated input or output will be factory fixed and cannot be reconfigured by the user.

Contactor-Based—Automatic Transfer Switch Features, continued

Feature Number	Description	Open Transition BIC3 C	BIC3 D	BIC9 C	BIC9 D	Closed Transition CBC9 C	CBC9 D	CTC9 C3
Open Transfer Operation Modes								
32A	Time delay neutral adjustable 0–120 seconds (delayed transition)	S	S	C	C	—	—	—
32B	Load voltage decay adjustable 2–30% nominal voltage	—	—	C	C	—	—	—
32C	In-phase transition defaults to load voltage decay	—	—	—	—	—	—	—
32D	In-phase transition defaults to time delay neutral	—	—	—	—	—	—	—
32E	Delay transition timer adjustable 3–60 seconds	—	—	—	—	—	—	—
32F	In-phase transition	—	—	—	—	—	—	—
32G	Time delay neutral fixed 0 or 2 seconds (delayed transition)	—	—	—	—	—	—	—
Load Control								
35A	Pre-transfer signal contacts 1 Form C	S	S	C	C	C	C	C
35B	Pre-/post-transfer signal	—	—	C	C	C	C	C
36	Load shed from emergency (S2 inhibit)	S	S	C	C	C	C	C
36A	Load shed—S2 inhibit with keyed switch (INPUT)	—	—	O	O	O	O	O
37	Go to "isolated" position (not SE rated)	—	—	C	C	C	C	C
Suitable for Use as Service Equipment Requires 16B, N or S								
37A	Without ground fault protection	—	—	—	—	—	—	—
37B	With ground fault protection required at 1000 A or more if the electrical service is a solidly grounded wye system of more than 150 V to ground but not exceeding 600 V phase to phase	—	—	—	—	—	—	—
Stainless Steel Device Covers								
38A	SS cover for device plate or SE disconnect	O	O	O	O	O	O	O
38B	SS cover for controller	O	O	O	O	O	O	O
Space Heater with Thermostat								
41A	100 watts	O	O	O	O	O	O	O
41E	375 watts	—	—	—	O	—	O	—
42	IBC/CBC seismic qualified	S	S	S	S	S	S	S
Load Management Contacts								
45A–K	Load sequencing contacts (1)	—	—	C	C	C	C	C
45L	Selective load shed (assignable to multiple out put contacts)	—	—	C	C	C	C	C
Closed Transition Operational Modes (User Must Specify)								
47C	Closed/in-phase transition default to load voltage decay	—	—	—	—	—	—	—
47D	Closed transition	—	—	—	—	C	C	C
47E	Closed/in-phase transition default to time delay neutral	—	—	—	—	—	—	—
47F	Closed transition load voltage decay	—	—	—	—	C	C	C
47G	Closed transition time delay neutral	—	—	—	—	C	C	C
47H	Parallel limit timer	—	—	—	—	—	—	—
Communications								
48A	INCOM—IPONI module	—	—	—	—	—	—	—
48D	PXG400 gateway (includes Modbus)	O	O	O	O	O	O	O
48F	Modbus—MPONI module (PONI not required with ATC-300+)	O	O	—	—	—	—	—
48F	Modbus communication—no PONI required	S	S	S	S	S	S	S
48G	Modbus TCP/IP gateway	O	O	O	O	O	O	O
48P	Power supply for remote annunciator	O	O	O	O	O	O	O
48RAC	Remote annunciator with control (includes Modbus)	O	O	O	O	O	O	O
48MRAC	Remote annunciator with control multi-switch (includes Modbus)	—	—	—	—	—	—	—
48R	Remote annunciator	—	—	S	S	S	S	S
48U	USB port	—	—	—	—	—	—	—
49A	Sensing isolation transformer Magnum	—	—	O	O	O	O	O
49B	Sensing isolation transformer	—	—	O	O	O	O	O
49C	Multi-tap voltage transformer (non AG only)	—	—	—	—	—	—	S
49C	Multi-tap voltage transformer (option only on fixed)	S	S	S	S	S	S	—

S = Standard, O = Optional, C = Configurable

Contactor-Based—Automatic Transfer Switch Features, continued

Feature Number	Description	Open Transition BIC3 C	BIC3 D	BIC9 C	BIC9 D	Closed Transition CBC9 C	CBC9 D	CTC9 C3
TVSS up to 480 V (Connected to Normal)								
51D1	50 kA—CVX	O	—	O	—	O	—	O
51F1	100 kA—CVX	O	—	O	—	O	—	O
Surge Protection Device with 12 ft Cable (on Normal)								
51S1	50 kA—SPD ①	—	O	—	O	—	O	—
51S2	80 kA—SPD ①	—	O	—	O	—	O	—
51S3	100 kA—SPD ①	—	O	—	O	—	O	—
51S4	120 kA—SPD ①	—	O	—	O	—	O	—
51S5	160 kA—SPD ①	—	O	—	O	—	O	—
51S6	200 kA—SPD ①	—	O	—	O	—	O	—
51S7	250 kA—SPD ①	—	—	—	—	—	—	—
51S8	300 kA—SPD ①	—	—	—	—	—	—	—
51S9	400 kA—SPD ①	—	—	—	—	—	—	—
52B	24 V generator battery power	—	—	—	—	—	—	—
52C	24 V onboard power supply (charger and batteries)	—	—	—	—	—	—	—
54A	Front access cabinet	—	—	—	—	—	—	—
54B	Upgrade to 316 stainless steel	O	O	O	O	O	O	—
59A	Silver-plated bus	S	S	—	S	—	S	—
59B	Tin-plated bus	O	O	—	—	—	—	—
61A	UPS device	O	O	—	—	—	—	—
61B	UPS 120 Vac terminal block input	S	S	—	—	—	—	—
80A	Emergency (S2) inhibit contact	S	S	C	C	C	C	C
Monitoring Outputs								
81A	General alarm indication contact	—	—	C	C	C	C	C
81B	ATS not in automatic	—	—	C	C	C	C	C
81C	ATS in test	—	—	C	C	C	C	C
81D	Engine test aborted	—	—	C	C	C	C	C
81E	Cooldown in process	—	—	C	C	C	C	C
81F	Engine start contact status	—	—	C	C	C	C	C
81G	Emergency inhibit on	—	—	C	C	C	C	C
81GL	Emergency inhibit on with white indicating light ②	—	—	O	O	O	O	O
81H	ATS on bypass	—	—	C	C	C	C	C
Inputs								
81J	Lockout	—	—	C	C	C	C	C
81K	Monitor mode	—	—	C	C	C	C	C
81L	Remote load test	—	—	C	C	C	C	C
Three Source ATS Control (Master/Slave)								
90A	Master control output	—	—	C	C	C	C	C
90B	Slave input	—	—	C	C	C	C	C

S = Standard, O = Optional, C = Configurable

Notes

① Add feature package B or C (e.g., 51S4B).
B: LED indication and audible alarm, Form C contact, EMI/RFI filtering (standard)
C: B and surge counter with Reset button (standard with surge)

② When these options are selected with the ATC-900 controller, the associated input or output will be factory fixed and cannot be reconfigured by the user.

Breaker-Based—Automatic Transfer Switch Features

Feature Number	Description	Open Transition ATH1 ATV1	ATH3 ATV3	ATH9 ATV9	NTHE NTVE	MTHX MTVX	Closed Transition MBHE
Timers							
1	Time delay normal to emergency (TDNE) fixed 2 or 15 seconds	S	—	—	—	—	—
1A	Adjustable 0–1800 seconds	—	S	—	—	—	—
1B	Adjustable 0–9999 minutes	—	—	S	—	—	—
2	Time delay engine start (TDES) fixed 3 seconds	S	—	—	—	—	—
2A	Adjustable 0–120 seconds	—	S	S	—	—	—
3	Time delay emergency to normal (TDEN) fixed 5 minutes	S	S	—	—	—	—
3A	Adjustable 0–1800 seconds	—	—	—	—	—	—
3B	Adjustable 0–9999 minutes	—	—	S	—	—	—
4	Time delay engine cooldown (TDEC) fixed 5 minutes	S	—	—	—	—	—
4A	Adjustable 0–1800 seconds	—	S	—	—	—	—
4B	Adjustable 0–9999 minutes	—	—	S	—	—	—
Emergency (S2) Source Sensing							
5H	Phase reversal protection	—	S	S	—	—	—
5J	All phase undervoltage/underfrequency	S	S	S	—	—	—
5K	All phase overvoltage/overfrequency	—	S	S	—	—	—
5L	All phase voltage unbalance	—	—	O	—	—	—
5L	All phase voltage phase loss	—	—	S	—	—	—
5N	All phase overfrequency	S	—	S	—	—	—
System or Engine Test							
6B	Engine test pushbutton	S	S	S	—	—	—
6C	Remote engine test input	—	—	C	—	—	—
6D	Maintained 2-position test switch	—	—	O	—	—	—
6H	Maintained 4-position test switch	—	—	O	—	—	—
7	Time delay emergency fail (TDEF) fixed 6 seconds	S	—	—	—	—	—
7A	Adjustable 0–6 seconds	—	S	S	—	—	—
Pushbutton Bypass							
8C	Bypass TDEN	—	S	S	—	—	—
8D	Bypass TDNE	—	S	S	—	—	—
8E	Bypass TDNE/TDEN (input)	—	—	C	—	—	—
Maintenance Selector Switch							
9B	Electrical operator isolator switch	—	O	O	—	—	—
Preferred Source Selector							
	Preferred source selector (programmed)	—	—	S	—	—	—
10A	Preferred source selector input	—	—	C	—	—	—
10C	Preferred source selector with selector switch	—	—	O	—	—	—
10B	Utility to utility or utility to generator	—	—	S	—	—	—
10D	Generator to generator	—	—	S	—	—	—
Indicating Lights/LEDs							
12C	Normal (S1) source connected	S	S	S	S	—	S
12D	Emergency (S2) source connected	S	S	S	S	—	S
12G	Normal (S1) source available	S	S	S	S	—	—
12H	Emergency (S2) source available	S	S	S	S	—	—
12L	Normal (S1) source tripped (requires feature 16)	—	O	O	O	—	—
12M	Emergency (S2) source tripped (requires feature 16)	—	O	O	O	—	—
Source Available Contacts							
14C	Normal (S1) source available 4 Form C	—	O	O	O	—	—
14D	Emergency (S2) source available 4 Form C	—	O	O	O	—	—
14E	Normal (S1) source available 1 Form C	—	—	S	—	—	—
14F	Emergency (S2) source available 1 Form C	—	—	S	—	—	—
14G	Normal (S1) source available 2 Form C	S	S	O	O	—	—
14H	Emergency (S2) source available 2 Form C	S	S	O	O	—	—

S = Standard, O = Optional, C = Configurable

Breaker-Based—Automatic Transfer Switch Features, continued

Feature Number	Description	Open Transition ATH1 ATV1	ATH3 ATV3	ATH9 ATV9	NTHE NTVE	MTHX MTVX	Closed Transition MBHE
Position Contacts							
15E	Normal (S1) source position 1 Form C	S	S	S	—	—	—
15F	Emergency (S2) source position 1 Form C	S	S	S	—	—	—
15G	Normal (S1) source position 3 Form C	O	O	O	—	—	—
15H	Emergency (S2) source position 3 Form C	O	O	O	—	—	—
15R	Normal (S1) source position 1 Form C (relay OUTPUT)	—	—	C	—	—	—
15S	Emergency (S2) source position 1 Form C (relay OUTPUT)	—	—	C	—	—	—
Integral Overcurrent Protection							
16N	Normal (S1) switch only	—	O	O	O	O	—
16E	Emergency (S2) switch only	—	O	O	O	O	—
16B	Normal (S1) and emergency (S2) switches	—	O	O	O	O	—
Metering (Specify normal (S1), emergency (S2) or load side for 18A thru E)							
18	Integrated load metering (DCT module)	—	—	—	—	—	—
18A	IQ 250/260	O	O	O	O	—	—
18B	PX4000/6000/8000	—	—	—	—	—	—
18D	IQ 130/140/150	O	O	O	O	—	—
18E	PXM2250/2260/2270	O	O	O	O	—	—
18J	Integrated metering (DCT module—load side only)	—	—	O	O	—	—
20A	Rear bus connections	—	O	O	O	O	—
21A	Non-standard terminals (optional in IES for centers)	O	O	O	O	O	O
22	Ground bus with provisions to attach to neutral	—	—	O	—	—	—
Plant Exerciser							
23A	Selectable—disabled 7-, 14-, 28-day interval, fixed 15 minutes load/no load, with fail-safe	S	—	—	—	—	—
23K	Selectable—disabled 7-, 14-, 28-day interval, 0–600 minutes load/no load, with fail-safe	—	S	—	—	—	—
23L	24-hour, 7-day, 365-day programmable plant exerciser	—	O	—	—	—	—
23M	Selectable—disabled 7-, 14-, 28-, 365-day interval, 0–600 minutes load/no load, with fail-safe	—	—	S	—	—	—
Normal (S1) Source Sensing							
26D	Go to emergency (S2) input	—	S	C	—	—	—
26E	Go to emergency (S2) input with selector switch ①	—	—	O	—	—	—
26H	Phase reversal protection	—	S	S	—	—	—
26J	All phase undervoltage/underfrequency	—	S	S	—	—	—
26K	All phase overvoltage/overfrequency	—	S	S	—	—	—
26L	All phase voltage unbalance and phase loss	—	—	O	—	—	—
26L	All phase voltage unbalance	—	S	S	—	—	—
26M	Allows operation with generator with utility sensing	O	—	—	—	—	—
26P	(available only through a field installed kit) (not in IES)	S	—	—	—	—	—
Alternative Transfer Modes of Operation							
29G	Selector switch for auto or non-auto operation ①	—	O	O	—	—	—
29J	Manual (pushbutton) transfer E to N; automatic N to E ①	—	O	O	—	—	—
29L	Manual retransfer on/off input	—	—	C	—	—	—
29M	Manual retransfer on/off input with selector switch ①	—	—	O	—	—	—
29K	Manual retransfer input	—	—	C	—	—	—

S = Standard, O = Optional, C = Configurable

Note

① When these options are selected with the ATC-900 controller, the associated input or output will be factory fixed and cannot be reconfigured by the user.

Breaker-Based—Automatic Transfer Switch Features, continued

Feature Number	Description	Open Transition ATH1 ATV1	ATH3 ATV3	ATH9 ATV9	NTHE NTVE	MTHX MTVX	Closed Transition MBHE
Open Transfer Operation Modes							
32A	Time delay neutral adjustable 0–120 seconds (delayed transition)	—	S	C	—	—	—
32B	Load voltage decay adjustable 2–30% nominal voltage	—	—	C	—	—	—
32C	In-phase transition defaults to load voltage decay	—	—	—	—	—	—
32D	In-phase transition defaults to time delay neutral	—	—	—	—	—	—
32E	Delay transition timer adjustable 3–60 seconds	—	—	—	S	—	—
32F	In-phase transition	—	—	—	—	—	—
32G	Time delay neutral fixed 0 or 2 seconds (delayed transition)	S	—	—	—	—	—
Logic Extender Cable (Open Enclosures Only)							
34A	48 inches (1219 mm)	—	—	O	O	—	—
34C	96 inches (2438 mm)	—	—	O	O	—	—
34E	144 inches (3658 mm)	—	—	O	O	—	—
34F	100 inches (2540 mm) (fixed mount only)	—	—	—	—	—	—
35A	Pre-transfer signal contacts 1 Form C	—	S	C	—	—	—
35B	Pre-/post-transfer signal	—	—	C	—	—	—
36	Load shed from emergency (S2 inhibit)	—	O	C	—	—	—
36A	Load shed—S2 inhibit with keyed switch (INPUT)	—	—	O	—	—	—
37	Go to "isolated" position (not SE rated)	—	—	C	—	—	—
Suitable for Use as Service Equipment Requires 16B, N or S							
37A	Without ground fault protection	—	O	O	O	—	—
37B	With ground fault protection required at 1000 A or more if the electrical service is a solidly grounded wye system of more than 150 V to ground but not exceeding 600 V phase to phase	—	O	O	O	—	—
Stainless Steel Device Covers							
38A	SS cover for device plate or SE disconnect	—	O	O	O	—	—
38B	SS cover for controller	O	O	O	—	—	—
Distribution Panel (For 240/120 V Only)							
39A	225 A with (2) 200 A feeders	—	O	—	—	—	—
39B	300 A with (3) 200 A feeders	—	O	—	—	—	—
39C	400 A with (4) 200 A feeders	—	O	—	—	—	—
Space Heater with Thermostat							
41A	100 watts	O	O	O	O	O	O
42	IBC/CBC seismic qualified	S	S	S	S	S	S
Load Management Contacts							
45A–K	Load sequencing contacts (1)	—	—	C	—	—	—
45L	Selective load shed (assignable to multiple out put contacts)	—	—	C	—	—	—
Communications							
48D	PXG400 gateway (includes Modbus)	—	O	O	—	—	—
48F	Modbus communication—no PONI required	—	—	S	—	—	—
48G	Modbus TCP/IP gateway	—	—	O	—	—	—
48P	Power supply for remote annunciator	—	O	O	—	—	—
48RAC	Remote annunciator with control (includes Modbus)	—	O	O	—	—	—
48MRAC	Remote annunciator with control multi-switch (includes Modbus)	—	O	—	—	—	—
48U	USB port	—	—	S	—	—	—
49B	Sensing isolation transformer	—	O	O	—	—	—
49C	Multi-tap voltage transformer ①	S	S	S	S	S	—
49C	Multi-tap voltage transformer (option only on fixed)	—	—	—	—	—	—

S = Standard, O = Optional, C = Configurable

Note

① On dedicated voltage 240 V or 208 V, multi-tap transformer is not included as standard.

Breaker-Based—Automatic Transfer Switch Features, continued

Feature Number	Description	Open Transition ATH1 ATV1	ATH3 ATV3	ATH9 ATV9	NTHE NTVE	MTHX MTVX	Closed Transition MBHE
TVSS up to 480 V (Connected to Normal)							
51D1	50 kA—CVX	—	O	O	O	O	—
51F1	100 kA—CVX	—	O	O	O	O	—
Surge Protection Device with 12 ft Cable (on Normal)							
51S1	50 kA—SPD ①	—	—	—	—	—	—
51S2	80 kA—SPD ①	—	—	—	—	—	—
51S3	100 kA—SPD ①	—	—	—	—	—	—
51S4	120 kA—SPD ①	—	—	—	—	—	—
51S5	160 kA—SPD ①	—	—	—	—	—	—
51S6	200 kA—SPD ①	—	—	—	—	—	—
51S7	250 kA—SPD ①	—	—	—	—	—	—
51S8	300 kA—SPD ①	—	—	—	—	—	—
51S9	400 kA—SPD ①	—	—	—	—	—	—
52B	24 V generator battery power	—	—	—	—	—	—
52C	24 V onboard power supply (charger and batteries)	—	—	—	—	—	—
54A	Front access cabinet	—	—	—	—	—	—
54B	Upgrade to 316 stainless steel	—	O	O	O	O	—
55B	Source swap (normal—bottom / emergency—top)	—	—	—	—	—	—
60	Control power transformer (240/120 V single-phase and 208 V only)	O	O	—	—	—	—
61A	UPS device	—	—	—	—	—	—
61B	UPS 120 Vac terminal block input	—	—	—	—	—	—
80A	Emergency (S2) inhibit contact	—	O	C	—	—	—
Monitoring Outputs							
81A	General alarm indication contact	—	—	C	—	—	—
81B	ATS not in automatic	—	—	C	—	—	—
81C	ATS in test	—	—	C	—	—	—
81D	Engine test aborted	—	—	C	—	—	—
81E	Cooldown in process	—	—	C	—	—	—
81F	Engine start contact status	—	—	C	—	—	—
81G	Emergency inhibit on	—	—	C	—	—	—
81GL	Emergency inhibit on with white indicating light ②	—	—	O	—	—	—
81H	ATS on bypass	—	—	C	—	—	—
Inputs							
81J	Lockout	—	—	C	—	—	—
81K	Monitor mode	—	—	C	—	—	—
81L	Remote load test	—	—	C	—	—	—
Three Source ATS Control (Master/Slave)							
90A	Master control output	—	—	C	—	—	—
90B	Slave input	—	—	C	—	—	—

S = Standard, O = Optional, C = Configurable

Notes

① Add feature package B or C (e.g., 51S4B).
B: LED indication and audible alarm, Form C contact, EMI/RFI filtering (standard)
C: B and surge counter with Reset button (standard with surge)

② When these options are selected with the ATC-900 controller, the associated input or output will be factory fixed and cannot be reconfigured by the user.

Magnum-Based—Automatic Transfer Switch Features

Feature Number	Description	Open Transition ATV9 MG	NTVE MG	BIV9 MG	Closed Transition CTV9 MG	CBV9 MG
Timers						
1B	Adjustable 0–9999 minutes	S	—	S	S	S
2A	Adjustable 0–120 seconds	S	—	S	S	S
3A	Adjustable 0–1800 seconds	—	—	—	—	—
3B	Adjustable 0–9999 minutes	S	—	S	S	S
4A	Adjustable 0–1800 seconds	—	—	—	—	—
4B	Adjustable 0–9999 minutes	S	—	S	S	S
Emergency (S2) Source Sensing						
5H	Phase reversal protection	S	—	S	S	S
5J	All phase undervoltage/underfrequency	S	—	S	S	S
5K	All phase overvoltage/overfrequency	S	—	S	S	S
5L	All phase voltage unbalance	O	—	O	O	O
5L	All phase voltage phase loss	S	—	S	S	S
5N	All phase overfrequency	S	—	S	S	S
System or Engine Test						
6B	Engine test pushbutton	S	—	S	S	S
6C	Remote engine test input	C	—	C	C	C
6D	Maintained 2-position test switch	O	—	O	O	O
6H	Maintained 4-position test switch	O	—	O	O	O
7A	Adjustable 0–6 seconds	S	—	S	S	S
Pushbutton Bypass						
8C	Bypass TDEN	S	—	S	S	S
8D	Bypass TDNE	S	—	S	S	S
8E	Bypass TDNE/TDEN (input)	C	—	C	C	C
Maintenance Selector Switch						
9B	Electrical operator isolator switch	O	—	O	O	O
Preferred Source Selector						
	Preferred source selector (programmed)	S	—	S	S	S
10A	Preferred source selector input	C	—	C	C	C
10C	Preferred source selector with selector switch	O	—	O	O	O
10B	Utility to utility or utility to generator	S	S	S	S	S
10D	Generator to generator	S	S	S	S	S
Indicating Lights/LEDs						
12C	Normal (S1) source connected	S	S	S	S	S
12D	Emergency (S2) source connected	S	S	S	S	S
12G	Normal (S1) source available	S	S	S	S	S
12H	Emergency (S2) source available	S	S	S	S	S
12L	Normal (S1) source tripped (requires feature 16)	O	O	O	O	O
12M	Emergency (S2) source tripped (requires feature 16)	O	O	O	O	O
Source Available Contacts						
14C	Normal (S1) source available 4 Form C	O	O	O	O	O
14D	Emergency (S2) source available 4 Form C	O	O	O	O	O
14E	Normal (S1) source available 1 Form C	S	—	S	S	S
14F	Emergency (S2) source available 1 Form C	S	—	S	S	S
14G	Normal (S1) source available 2 Form C	O	—	O	O	O
14H	Emergency (S2) source available 2 Form C	O	—	O	O	O

S = Standard, O = Optional, C = Configurable

Magnum-Based—Automatic Transfer Switch Features, continued

Feature Number	Description	Open Transition ATV9 MG	NTVE MG	BIV9 MG	Closed Transition CTV9 MG	CBV9 MG
Position Contacts						
15E	Normal (S1) source position 1 Form C	S	—	S	S	S
15F	Emergency (S2) source position 1 Form C	S	—	S	S	S
15G	Normal (S1) source position 3 Form C	O	—	O	O	O
15H	Emergency (S2) source position 3 Form C	O	—	O	O	O
15R	Normal (S1) source position 1 Form C (relay OUTPUT)	C	—	C	C	C
15S	Emergency (S2) source position 1 Form C (relay OUTPUT)	C	—	C	C	C
Integral Overcurrent Protection						
16N	Normal (S1) switch only	O	O	O	O	O
16E	Emergency (S2) switch only	O	O	O	O	O
16B	Normal (S1) and emergency (S2) switches	O	O	O	O	O
Metering (Specify normal (S1), emergency (S2) or load side for 18A thru E)						
18	Integrated load metering (DCT module)	O	—	O	O	O
18A	IQ 250/260	O	O	O	O	O
18B	PX4000/6000/8000	—	O	—	—	—
18D	IQ 130/140/150	O	O	O	—	—
18E	PXM2250/2260/2270	O	O	O	—	—
18J	Integrated metering (DCT module—load side only)	O	O	O	O	O
20A	Rear bus connections	O	O	O	O	O
21A	Non-standard terminals (optional in IES for centers)	O	O	O	O	O
22	Ground bus with provisions to attach to neutral	O	S	O	O	O
22A	18 conductor ground bus 500 or 750 kcmil	S	O	S	S	S
22B	30 conductor ground bus 500 or 750 kcmil	O	O	O	O	O
22C	Special ground bar—contact factory	O	O	O	O	O
22D	16 conductor ground bus 500 or 750 kcmil	—	—	—	—	—
Plant Exerciser						
23M	Selectable—disabled 7-, 14-, 28-, 365-day interval, 0–600 minutes load/no load, with fail-safe	S	—	S	S	S
Normal (S1) Source Sensing						
26D	Go to emergency (S2) input	C	—	C	C	C
26E	Go to emergency (S2) input with selector switch ①	O	—	O	O	O
26H	Phase reversal protection	S	—	S	S	S
26J	All phase undervoltage/underfrequency	S	—	S	S	S
26K	All phase overvoltage/overfrequency	S	—	S	S	S
26L	All phase voltage unbalance and phase loss	O	—	O	O	O
26L	All phase voltage unbalance	S	—	S	S	S
Alternative Transfer Modes of Operation						
29D	Dual ATS bypass	—	—	—	—	—
29G	Selector switch for auto or non-auto operation ①	O	—	O	O	O
29J	Manual (pushbutton) transfer E to N; automatic N to E ①	O	—	O	O	O
29L	Manual retransfer on/off input	C	—	C	C	C
29M	Manual retransfer on/off input with selector switch ①	O	—	O	O	O
29K	Manual retransfer input	C	—	C	C	C

S = Standard, O = Optional, C = Configurable

Note

① When these options are selected with the ATC-900 controller, the associated input or output will be factory fixed and cannot be reconfigured by the user.

Magnum-Based—Automatic Transfer Switch Features, continued

Feature Number	Description	Open Transition ATV9 MG	NTVE MG	BIV9 MG	Closed Transition CTV9 MG	CBV9 MG
Open Transfer Operation Modes						
32A	Time delay neutral adjustable 0–120 seconds (delayed transition)	C	—	C	C	C
32B	Load voltage decay adjustable 2–30% nominal voltage	C	—	C	C	C
32C	In-phase transition defaults to load voltage decay	C	—	C	C	C
32D	In-phase transition defaults to time delay neutral	C	—	C	C	C
Logic Extender Cable (Open Enclosures Only)						
34F	100 inches (2540 mm) (fixed mount only)	O	O	—	—	—
35A	Pre-transfer signal contacts 1 Form C	C	—	C	C	C
35B	Pre-/post-transfer signal	C	—	C	C	C
36	Load shed from emergency (S2 inhibit)	C	—	C	C	C
36A	Load shed—S2 inhibit with keyed switch (INPUT)	O	—	O	O	O
37	Go to "isolated" position (not SE rated)	C	—	C	C	C
Suitable for Use as Service Equipment Requires 16B, N or S						
37A	Without ground fault protection	O	O	O	O	O
37B	With ground fault protection required at 1000 A or more if the electrical service is a solidly grounded wye system of more than 150 V to ground but not exceeding 600 V phase to phase	O	O	O	O	O
Stainless Steel Device Covers						
38A	SS cover for device plate or SE disconnect	O	O	O	O	O
38B	SS cover for controller	O	O	O	O	O
Space Heater with Thermostat						
41A	100 watts	—	—	—	—	—
41E	375 watts	O	O	O	O	O
42	IBC/CBC seismic qualified	S	S	S	S	S
Load Management Contacts						
45A–K	Load sequencing contacts (1)	C	—	C	C	C
45L	Selective load shed (assignable to multiple out put contacts)	C	—	C	C	C
Closed Transition Operational Modes (User Must Specify)						
47C	Closed/in-phase transition default to load voltage decay	—	—	—	C	C
47D	Closed transition	—	—	—	C	C
47E	Closed/in-phase transition default to time delay neutral	—	—	—	C	C
47F	Closed transition load voltage decay	—	—	—	—	—
47G	Closed transition time delay neutral	—	—	—	—	—
47H	Parallel limit timer	—	—	—	S	S
Communications						
48D	PXG400 gateway (includes Modbus)	O	—	O	O	O
48G	Modbus TCP/IP gateway	O	—	O	O	O
48P	Power supply for remote annunciator	O	—	O	O	O
48RAC	Remote annunciator with control (includes Modbus)	O	—	O	O	O
48MRAC	Remote annunciator with control multi-switch (includes Modbus)	O	—	O	O	O
48U	USB port	S	—	S	S	S
49A	Sensing isolation transformer Magnum	O	—	O	O	O
49B	Sensing isolation transformer	O	—	O	O	O
49C	Multi-tap voltage transformer (non AG only)	S	S	S	S	S

S = Standard, O = Optional, C = Configurable

Magnum-Based—Automatic Transfer Switch Features, continued

Feature Number	Description	Open Transition ATV9 MG	NTVE MG	BIV9 MG	Closed Transition CTV9 MG	CBV9 MG
Surge Protection Device with 12 ft Cable (on Normal)						
51S1	50 kA—SPD ①	O	O	O	O	O
51S2	80 kA—SPD ①	O	O	O	O	O
51S3	100 kA—SPD ①	O	O	O	O	O
51S4	120 kA—SPD ①	O	O	O	O	O
51S5	160 kA—SPD ①	O	O	O	O	O
51S6	200 kA—SPD ①	O	O	O	O	O
51S7	250 kA—SPD ①	O	O	O	O	O
51S8	300 kA—SPD ①	O	O	O	O	O
51S9	400 kA—SPD ①	O	O	O	O	O
52B	24 V generator battery power	—	—	—	—	—
52C	24 V onboard power supply (charger and batteries)	—	—	—	—	—
54A	Front access cabinet	O	O	O	O	O
54B	Upgrade to 316 stainless steel	—	—	—	—	—
55B	Source swap (normal—bottom / emergency—top)	O	O	O	O	O
57A	Magnum breaker lift device (1) NEMA 1 only	O	O	—	—	—
57B	Magnum breaker lift device bypass (2) NEMA 1 only	—	—	O	O	O
58A	Shutterless cassette (drawout only)	S	S	S	S	S
58B	Shuttered cassette (drawout only)	O	O	O	O	O
59A	Silver-plated bus	S	S	S	S	S
59B	Tin-plated bus	O	O	O	O	O
61A	UPS device	—	O	—	—	—
61B	UPS 120 Vac terminal block input	—	O	—	—	—
80A	Emergency (S2) inhibit contact	C	—	C	C	C
Monitoring Outputs						
81A	General alarm indication contact	C	—	C	C	C
81B	ATS not in automatic	C	—	C	C	C
81C	ATS in test	C	—	C	C	C
81D	Engine test aborted	C	—	C	C	C
81E	Cooldown in process	C	—	C	C	C
81F	Engine start contact status	C	—	C	C	C
81G	Emergency inhibit on	C	—	C	C	C
81GL	Emergency inhibit on with white indicating light ②	O	—	O	O	O
81H	ATS on bypass	C	—	C	C	C
Inputs						
81J	Lockout	C	—	C	C	C
81K	Monitor mode	C	—	C	C	C
81L	Remote load test	C	—	C	C	C
Three Source ATS Control (Master/Slave)						
90A	Master control output	C	—	C	C	C
90B	Slave input	C	—	C	C	C

S = Standard, O = Optional, C = Configurable

Notes

① Add feature package B or C (i.e., 51S4B).
B: LED indication + audible alarm, Form C contact, EMI/RFI filtering (standard)
C: B + surge counter with Reset button (standard with surge)

② When these options are selected with the ATC-900 controller, the associated input or output will be factory fixed and cannot be reconfigured by the user.

Feature Description

Timers

1. Time Delay Normal to Emergency (TDNE)

Provides a time delay to allow for the generator to warm up before transferring the load to the emergency source. Timing begins only after the Emergency Source becomes available and is deemed good based on the programmable voltage and frequency set points in the controller.

2. Time Delay Engine Start (TDES)

Provides a time delay before initiating the generator start cycle. This is to account for momentary power outages or voltage fluctuations of the normal source. Provides a Form C contact to the generator starter circuit.

3. Time Delay Emergency to Normal (TDEN)

Provides a time delay of the retransfer operation to permit stabilization of the normal source. Timing begins only after the normal source becomes available and is deemed good based on the programmable voltage and frequency set points in the controller. This function is fail-safe protected.

4. Time Delay Engine Cooldown (TDEC)

Provides a time delay before initiating the generator stop cycle after the retransfer operation. This allows the generator to cool down by running unloaded. Timing begins on completion of the retransfer cycle.

Source 2 Sensing

5. Source 2—Monitoring and Protection

Provides monitoring and protection based on the Source 2 voltage and/or frequency set points. All **Feature 5** monitoring and protection functions are fail-safe operations.

5H. Three-Phase Rotation Protection

Provides three-phase reversal sensing in order to protect against transferring to an out-of-phase source. The controller will treat the opposite source as unavailable if the sources are out of phase, based on programmable set points in the controller.

5J. All-Phase Undervoltage/ Underfrequency Protection

Provides undervoltage/ underfrequency monitoring and protection based on programmable set points in the controller.

5K. All-Phase Overvoltage/ Overfrequency Protection

Provides overvoltage/ overfrequency monitoring and protection based on programmable set points in the controller.

5L. Three-Phase Voltage Unbalance/Phase Loss

Provides phase loss detection from blown fuses on the Source 2 supply circuit.

5M. All Phase Voltage Phase Loss

Provides phase loss detection on the Source 2 supply circuit.

6B. Test Operators

Automatic transfer switches are provided with a controller faceplate test pushbutton that simulates a loss of the Source 1 as standard. All programmed time delays (TDNE, TDEN, etc.) will be performed as part of the test. Engine run time of the test is equal to the plant exerciser programmed set point. All tests are fail-safe protected.

6C. Remote Engine Test (INPUT)

Provides an input to initiate a test to simulate a loss of the Source 1 as standard. All programmed time delays (TDNE, TDEN, etc.) will be performed as part of the test. Engine run time of the test is equal to the plant exerciser programmed set point. All tests are fail-safe protected. The test is initiated via remote momentary contact closure.

6D. Maintained 2 Position Test Switch

Provides a door-mounted 2-position test switch marked "Auto" and "Test". Available with ATC-900 controller only.

6H. 4-Position Test Selector Switch (FPSS)

Provides a door-mounted 4-position, maintained contact selector switch marked "Auto," "Test," "Engine Start," and "Off." The FPSS is fail-safe protected, except for the "Off Position." Transfer switch operation is determined by the switch position. Transfer switch operations are as follows:

"Auto"—Automatic operation mode.

"Test"—A load test is performed until the switch is moved to another position.

"Engine Start"—A no-load test is performed until the switch is moved to another position.

"Off"—The automatic transfer controller and engine start contact are disabled. A white pilot light is provided to indicate that the FPSS is in the "Off" position.

7. Time Delay Emergency Fail (TDEF)

Provides a time delay that prevents a connected emergency source from being declared "unavailable" based on the customer's set points. This is to account for momentary generator fluctuations. If the Source 2 remains in a failed state, then 0.5 seconds after the TDEF timer expires the transfer switch will proceed with the programmed sequence for retransfer if Source 1 is available. This time delay is only implemented when Source 2 is a generator.

Note: This feature is also enabled when large loads cause generator output to drop below customer set points.

8. Time Delay Bypass Push-button

Provides a momentary contact pushbutton to bypass the TDNE (**Feature 1**) and/or TDEN (**Feature 3**) time delays. The Time Delay Bypass Pushbutton contact, when closed, will reduce any or all of the programmed time delay to zero. Must be executed when TDNE or TDEN timer is displayed on the controller.

8C. Bypass Time Delay Emergency to Normal (TDEN)

8D. Bypass Time Delay Normal to Emergency (TDNE)

8E. Bypass TDNE/TDEN (INPUT)

Provides input to bypass the TDNE (**Feature 1**) and/or TDEN (**Feature 2**) time delays. The Time Delay Bypass Pushbutton contact, when closed, will reduce any or all of the programmed time delay to zero. Must be executed when TDNE or TDEN timer is displayed on the controller. The bypass time delay feature is initiated via remote momentary contact closure.

8F. Bypass Timers—External Pushbutton Input

Provides an input from a customer supplied external pushbutton to bypass or reduce the programmed time delays to zero for TDEN and TDNE.

9B. Maintenance Selector Switch (MSS)

Provides a 2-position, maintained contact selector switch marked "Operate" and "Disable." When the MSS is placed in the "Disable" position, the controller logic will be disconnected from the transfer motor circuit. The MSS is placed in the "Operate" position for normal automatic operation.

9C. Monitor Mode Selector Switch

Provides a 2-position selector switch to enable/disable Monitor Mode on the controller. When enabled, the controller will monitor the availability, connected state and voltage conditions and will initiate a transfer.

10. Preferred Source Selector

Provides a means to designate either Source 1 or Source 2 as the "Preferred" source. The "Preferred" source is the source that the transfer switch will connect the load to if it is available.

Note: This is a programmable software feature not an actual switch.

10A. Preferred Source Selector (INPUT)

Provides a means to designate either Source 1 or Source 2 as the "Preferred" source using a remote contact or device panel mounted contact closure. The "Preferred" source is the source that the transfer switch will connect the load to if it is available.

10B. Preferred Source Selector

Provides a programmable source selector for use on systems comprised of dual utility or utility and engine/generator power sources.

10C. Preferred Source Selector with Selector Switch

Provides a means to designate either Source 1 or Source 2 as the "Preferred" source via device panel mounted selector switch control. The "Preferred" source is the source that the transfer switch will connect the load to if it is available.

10D. Preferred Source Selector

Provides a programmable source selector for use on systems comprised of dual engine/generator power sources. (Dual engine starting circuits are provided.)

12C. Source 1—Load Connected

Provides a green indication that indicates the load is connected to Source 1 when lit.

12D. Source 2—Load Connected

Provides a red indication that indicates the load is connected to Source 2 when lit.

12G. Source 1—Present

Provides a white or amber indication "Depending on the Controller" that Source 1 has power; however, this does not indicate whether Source 1 is acceptable.

12H. Source 2—Present

Provides an amber indication that Source 2has power; however, this does not indicate whether Source 2 is acceptable.

Overcurrent Trip Indication

Available only with integral overcurrent protection (**Feature 16**) (shown on automatic transfer controller display).

12L. Source 1 Trip Indication

The automatic transfer controller display will read "Lockout" if the Source 1 circuit breaker is in the "tripped" position.

12M. Source 2 Trip Indication

The automatic transfer controller display will read "Lockout" if the Source 2 circuit breaker is in the "tripped" position.

14. Relay Auxiliary Contacts

14C. Source 1 Present

Provides 4 Form C relay auxiliary contacts. The relay is energized when Source 1 is present.

14D. Source 2 Present

Provides 4 Form C relay auxiliary contacts. The relay is energized when Source 2 is present.

14E. Source 1 Available

Provides 1 Form C relay auxiliary contact. The relay is energized when Source 1 is available and within the controller's programmable set points.

14F. Source 2 Available

Provides 1 Form C relay auxiliary contact. The relay is energized when Source 2 is available and within the controller's programmable set points.

14G. Source 1 Present

Provides 2 Form C relay auxiliary contacts. The relay is energized when Source 1 is present.

14H. Source 2 Present

Provides 2 Form C relay auxiliary contacts. The relay is energized when Source 2 is present.

14J. Source 1 Present

Provides 4 Form C relay auxiliary contacts. The relay is energized when Source 1 is present.

14K. Source 2 Present

Provides 4 Form C relay auxiliary contacts. The relay is energized when Source 2 is present.

14L. Source 1 Present

Provides 2 Form C relay auxiliary contacts. The relay is energized when Source 1 is present.

14M. Source 2 Present

Provides 2 Form C relay auxiliary contacts. The relay is energized when Source 1 is present.

15. Switch Position Indication Contact

Provides a contact that indicates if the power switching device is in the "open" or "closed" position.

15E. Source 1 Position Indication Contact

Provides 1 Form C contact that indicates the position of the Source 1 power switching device.

15F. Source 2 Position Indication Contact

Provides 1 Form C contact that indicates the position of the Source 2 power switching device.

15G. Source 1 Position Indication Contact

Provides 3 Form C contact that indicates the position of Source 1 power switching device.

15H. Source 2 Position Indication Contact

Provides 3 Form C contact that indicates the position of Source 1 power switching device.

15K. Normal (S1) Breaker Position Indication 1 Form C (Output)

Provides 1 Form C contact of the breaker indicating the breaker position.

15L. Normal (S1) Breaker Position Indication 2 Form C (Output)

Provides 2 Form C contact of the breaker indicating the breaker position.

15M. Source 2 Load Shed Contacts

Provides 4 Form C contacts to initiate a load circuit disconnect while on Source 2. This gives the user the capability of selectively choosing not to run certain loads while on Source 2.

15R. Normal (S1) Source Position 1 Form C (Relay OUTPUT)

Provides 1 Form C relay contact that indicates the position of the Source 1 power switching device.

15S. Emergency (S2) Source Position 1 Form C (Relay OUTPUT)

Provides 1 Form C relay contact that indicates the position of the Source 2 power switching device.

16B. Integral Overcurrent Protection on Both Power Source Switching Devices

Provides integral overcurrent protection on both Source 1 and Source 2 power switching devices.

16E. Integral Overcurrent Protection on the Source 2 Power Switching Device

Provides integral overcurrent protection on the Source 2 power switching device.

16N. Integral Overcurrent Protection on the Source 1 Power Switching Device

Provides integral overcurrent protection on the Source 1 power switching device.

16S. External Overcurrent Protection on the Source 1 Power Switching Device

Provides overcurrent protection on the Source 1 power switching device.

17. Breaker with an Overcurrent Trip Unit

17H. Padlockable Handle Lock Hasp

Provides a means to padlock the breaker supplied only on a service entrance rated contactor based design. The padlock kit is provided as a ship loose item and able to be customer mounted as a mechanical means to lock out the breaker.

17N. Normal (S1) Breaker with Eaton 310+ Trip Unit

The UL 1008 integrated service entrance rated contactor design has a 100% load rating.

18. Metering

The ATS controller provides voltage and frequency readings. If additional metering functions are required, Eaton offers a series of digital meters that may be added to the ATS. The meter type can provide simple current and voltage readings or more capable meters providing Power, Demand and energy readings.

Available with an optional communications interface. (See **Feature 48**—Communications for available communication modules.)

Feature 18 metering options include all required external devices (CTs, etc.) for a fully functioning metering system.

18J. Integrated Metering (LOAD Side)

This metering option incorporates basic load metering into the ATC-900 using the add-on DCT module. In addition to the standard voltage and frequency metering, the DCT module adds current, real power, reactive power, apparent power, and power factor. This option also enables the selective load shed feature (option 45L).

IQ 130/140/150 (Option 18d)

IQ 130

This digital meter provides basic current and voltage per phase (L-L, L-N) and min./max. readings (I, V). Optional communication RS-485, Modbus RTU.

IQ 140

In addition to basic current and voltage, will provide frequency, power measurements real, reactive and apparent power, total (W, VAR, VA). Optional communication RS-485, Modbus RTU.

IQ 150

In addition to basic current/voltage/frequency and power readings, will provide Energy Real reactive and apparent (Wh, VAR, VAh). Optional communication RS-485, Modbus RTU.

IQ 250/260 (Option 18a)

IQ 250

This digital meter provides current per phase and current demand, voltage (L-L, L-N) and frequency. Power, energy and demand readings. Real, reactive and apparent power and energy, power factor. RS-485 communications, Modbus RTU or ASCII. Optional I/O slots available.

IQ 260

In addition to all of the features of the IQ 250, power quality analysis is available with THD voltage and current per phase.

Power Xpert 2000 (Option 18e)

Provides either a Power Xpert PXM 2250, PXM 2260 or PXM 2270 meter.

Power Xpert 4000, 6000, 8000 (Option 18b)

Provides one of the Power Xpert Meters with or without graphic displays.

20A. Rear Bus Provisions

Provides Source 1, Source 2 and Load Circuit rear accessible bus stabs with provision for bus bar connection. Eaton transfer switches are provided with either front or rear (dependent on switch type) connected solderless screw-type terminals for power cable connection as standard.

21A. Optional Power Cable Connection Terminals

Eaton transfer switches are provided as standard with Source 1, Source 2 and load circuit solderless screw-type terminals for power cable connection. Alternate terminal wire sizes, and compression lug provisions may be available dependent on transfer switch type and ampere rating.

Plant Exerciser

23A. Plant Exerciser With Fail-Safe

Provides a means for automatic testing of the engine generator set or standby power system. All programmed time delays in the controller will be performed during plant exerciser operations.

Programmable set points for test intervals are start time, either disabled, daily, 7, 14 or 28 days.

15-minute fixed engine test time.

Test may be performed with or without load transfer. Test may be manually cancelled during the operation. This function is fail-safe protected.

23K. Plant Exerciser With Fail-Safe

Provides a means for automatic testing of the engine generator set or standby power system. All programmed time delays in the controller will be performed during plant exerciser operations.

Programmable set points for test intervals are start time, either disabled, daily, 7, 14 or 28 days, engine test time.

Test may be performed with or without load transfer. Test may be manually cancelled during the operation. This function is fail-safe protected.

23M. Selectable—Disabled, 7, 14, 28 or Day Interval, or Calendar Date, 0–600 Minutes, Load/No Load, with Fail-safe

Provides a means for automatic testing of the engine generator set or standby power system. All programmed time delays in the controller will be performed during plant exerciser operations. Programmable set points for test intervals are start time, engine test time and either disabled, daily, 7, 14 or 28 days or up to 12 specific calendar dates. Test may be performed with or without load transfer. Test may be manually cancelled during the operation. This function is fail-safe protected. This feature includes independent time delays for time delay normal to emergency, time delay emergency to normal and time delay for engine cooldown.

Source 1 Sensing

26. Source 1—Monitoring and Protection

Provides Source 1 monitoring and protection functions. If Source 1 fails, then the automatic transfer controller will begin the sequence of operations necessary to transfer the load to Source 2. All **Feature 26** monitoring and protection functions are fail-safe operations.

26D. Go to Emergency (Source 2)

Provides the capability for an external contact closure to initiate a transfer to the Source 2 power source. This includes starting the generator, performing the programmed time delays and the transfer operation. Retransfer will occur when the external contact is opened. This is a fail-safe function.

26E. Go to Emergency (S2) Input with Selector Switch

Provides a device panel mounted selector switch labeled, "Auto/Go to Source 2", to initiate a transfer to the Source 2 power source. This includes starting the generator, performing the programmed time delays and the transfer operation. Retransfer will occur when the external contact is opened. This is a fail-safe function.

26H. Three-Phase Rotation Protection

Provides three-phase reversal sensing in order to protect against transferring to an out-of-phase source. The controller will treat the opposite source as unavailable if the sources are out of phase, based on programmable set points in the controller.

26J. All-Phase Undervoltage/ Underfrequency Protection

Provides all-phase undervoltage/underfrequency monitoring and protection based on programmable set points in the controller.

26K. All-Phase Overvoltage/ Overfrequency Protection

Provides all-phase overvoltage/overfrequency monitoring and protection based on programmable set points in the controller.

26L. Three-Phase Voltage Unbalance/ Phase Loss

Provides phase loss detection from blown fuses on the Source 1.

26M. All-Phase Voltage Phase Loss

Provides phase loss detection on the Source 1 supply circuit.

26N. All-Phase Undervoltage Protection

Provides undervoltage protection for Source 1 (ATC-100 Controller only).

29. Transfer Operation Modes

Provides standard or optional transfer modes, mode selection devices and operational methods for transfer switches.

29D. Dual ATS Bypass

Provides an active controller while the bypass isolation switch is in the bypass mode.

29G. Automatic/Manual Operation With Selector Switch

Provides 2-position selector switch (labeled Auto/manual) that permits selection of the automatic or manual transfer. When in the "Auto" position, the transfer switch operates with fully automatic transfer, retransfer and generator startup and shutdown operations. When in the "Manual" position, manual operation is required to initiate the generator startup or retransfer with generator shutdown operations.

Note: Transfer switches with **Feature 29** must be labeled as non-automatic transfer switch equipment.

29J. Automatic Transfer or Automatic Transfer With Non-Automatic Retransfer Operation

Provides a field-selectable programmable set point that permits the transfer switch to operate in one of the following two transfer modes (A or B):

A. Fully automatic operation.

B. Automatic engine/ generator startup and automatic transfer operation from Source 1 to Source 2. Manual pushbutton operation is required to initiate the retransfer operation and engine/generator shutdown. The pushbutton for manual retransfer operation is included. This is fail-safe protected.

29K. Manual Retransfer (INPUT)

Provides an input to remotely initiate a manual retransfer from Source 2 to Source 1.

29L. Manual Retransfer On/ Off (INPUT)

Provides an input to remotely enable or disable the manual retransfer feature.

29M. Manual Retransfer On/Off Input with Selector Switch

Provides a device panel mounted selector switch to enable or disable the manual retransfer feature. Selection of this option automatically adds option 29J.

32. Delayed Transition Transfer Modes for Open Transition Transfer Switches

Provides delayed transition transfer modes for an open transition transfer switch. Often used in systems with inductive loads, a delayed transition transfer switch may prevent or reduce inrush currents due to out-of-phase switching of inductive loads.

32A. Time Delay Neutral

Provides a time delay in the neutral position during the transfer and retransfer operations during which both Source 1 and Source 2 are disconnected from the load circuit. This allows inductive loads time to reach a safe voltage and eliminate back EMF. The time delay is programmable and is the same for both transfer and retransfer operations. This is a passive feature that requires the consulting engineer/installer to determine the settings based on how the user will operate the facility. Adjustable 0–120 seconds.

32B. Load Voltage Decay

Provides load voltage measurement to sense back EMF that is generated when the transfer switch is the neutral position. It provides a delay in transfer in either direction if an unacceptable level is sensed as established by a programmed set point. This is an active feature that adapts to how the facility is operating in order to minimize neutral position wait time, but ensure safety. Adjustable 2–30% of nominal voltage.

32C. In-Phase Transition With Default to Load Voltage Decay

Provides in-phase transition, which is a feature that will permit a transfer or retransfer between two available sources that have a phase angle difference near zero. The in-phase transition feature includes permissible frequency difference and synchronization time set points. In the event Source 1 and Source 2 fail to synchronize within the permitted frequency difference and time, then the controller defaults to the load voltage decay operation as described in **Feature 32B**. Adjustable frequency difference 0.0–3.0 Hz. Adjustable synchronization time allowance 1–60 minutes.

32D. In-Phase Transition With Default to Time Delay Neutral

Provides in-phase transition, which is a feature that will permit a transfer or retransfer only between two available sources that have a phase angle difference near zero. The in-phase transition feature includes permissible frequency difference and synchronization time set points. In the event Source 1 and Source 2 fail to synchronize within the permitted frequency difference and time, then the controller defaults to the time delay neutral operation as described in **Feature 32A**. Adjustable frequency difference 0.0–3.0 Hz. Adjustable synchronization time allowance 1–60 minutes.

32E. Delayed Transition

The transfer and retransfer operations during which both Source 1 and Source 2 are disconnected from the load circuit. The time delay is programmable and the same for both transfer and retransfer operation. Adjustable 3–60 seconds.

32F. In-Phase Transition

Provides in-phase transition, this feature will permit a transfer or retransfer between two available sources that have a phase angle difference of 8 degrees or less. The in-phase transition feature includes permissible frequency difference and synchronization time set points. In the event Source 1 and Source 2 fail to synchronize within the permitted frequency difference and time, the Alarm relay will energize and "Failed to Sync" will be displayed on Line 1 of the controller. After resetting the alarm, another in-phase transition may be attempted or a non-synchronized transfer may be initiated by failing the connected source. The adjustable frequency difference is 0.0 to 3.0 Hz. If the synchronization does not occur within a specified amount of time, the Alarm relay will energize and the failure will be logged into the transfer history as either "Sync Fail - Freq" or "Sync Fail - Phase" depending on whether the frequency difference or the phase difference was excessive.

32G. Time Delay Neutral

This feature provides a time delay in the neutral position during the transfer and retransfer operations during which both the utility source and the generator source are disconnected from the load circuit. TDN cannot be implemented on a transfer switch using a 2-position contactor.

Jumper selectable at disable (0 seconds) or enable (2 seconds).

Logic Extender Cable

34A. 48 Inches (1219 mm)

Provides logic extension cable with connectors.

34C. 96 Inches (2438 mm)

Provides logic extension cable with connectors.

34E. 144 Inches (3658 mm)

Provides logic extension cable with connectors.

34F. 100 Inches (2540 mm)

Provides logic extension only for open Magnum ATS.

35A. Pre-Transfer Signal with 1 Form C Contact

Provides a signal prior to the transferring of the load. Will not transfer until the programmable delay set point in the controller is reached. The pre-transfer time delay option, if both sources are not available, will ignore the time delay set in the controller.

35C. Pre-/Post-Transfer Signal (OUTPUT)

Provides a Form C contact signal prior to and after a transfer from S1 to S2 or S2 back to S1. Will not transfer until the programmable delay set point in the controller is reached. If both sources are not available, this option will ignore the time delay set in the controller. The time delay is programmable for 0–120 seconds pre transfer and 0–120 seconds post transfer.

35D. Post-Transfer Signal with 1 Form C Contact

Provides a Form C output from the ATC-900 to signal that the switch did transfer. The time delay is programmable for 0–120 seconds but does not start to count down until connected to the new source.

36. Load Shed From Emergency

Provides the capability for an external NC contact to initiate a load circuit disconnection from the Source 2 power source. If the load circuit is connected to Source 2 and the contact is opened, then a retransfer to Source 1 is completed if Source 1 is available. If Source 1 is not available, then the transfer switch will transfer to neutral. If the load circuit is connected to Source 1 and the contact is open, then a transfer Source 2 is prohibited.

36A. Load Shed—S2 Inhibit with Keyed Switch (INPUT)

Provides a device panel mounted selector switch to initiate a load circuit disconnection from the Source 2 power source. If the load circuit is connected to Source 2 and the selector switch is switched to the "S2 Inhibit/Enabled" position, then a retransfer to Source 1 is completed if Source 1 is available. If Source 1 is not available, then the transfer switch will transfer to neutral. If the load circuit is connected to Source 1 and the switch is in the "S2 Inhibit" position, then a transfer Source 2 is prohibited.

37. Go to Neutral (not SE Rated) (INPUT)

Provides an input to transfer a three-position transfer switch from either of the connected sources to the off or neutral position. This features applies only to those transfer switches with three-position power device using a remote contact closure. When the signal is removed, the transfer switch will transfer back to the available, preferred source.

Service Equipment Rated Transfer Switch

Provides the label "suitable for use as service equipment" and the features necessary to meet the requirements for the label. Includes service disconnect with visible indication and neutral assembly with removable link. **Feature 16B** or **16N** must be selected separately for a molded case or power case switch design and 17N for a service rated contactor design.

37A. Service Equipment Rated Transfer Switch Without Ground Fault Protection

Provides service equipment rating for an application that does not require ground fault protection.

37B. Service Equipment Rated Transfer Switch With Ground Fault Protection

Provides service equipment rating for an application that requires ground fault protection.

38. Steel Cover

Provides protection for a device panel as option 38a and protection for the controller as option 38b.

39. Distribution Panel

The distribution panel feature uses a panelboard design with bolt-on circuit breakers type EHD. Bolt-on breakers are designed to hold up to the changes in temperature and humidity that an industrial application calls for. (240/120 Vac single-phase systems only.)

39A. 225 A With (2) 200 A Feeders

39B. 300 A With (3) 200 A Feeders

39C. 400 A With (4) 200 A Feeders

41. Space Heater With Thermostat

Provides a space heater and adjustable thermostat. External control power is not required. Availability is dependent on transfer switch type.

41A. Space Heater With Thermostat—100 Watt

Provides 100-watt space heater with an adjustable thermostat.

41E. Space Heater With Thermostat—375 Watt

Provides 375-watt space heater with an adjustable thermostat.

42. Seismic Qualification

45. Load Sequencing Capability

Provides the capability for sequential closure of up to 10 addressable relays after a transfer. Each addressable relay provides (1) Form C contact. A single adjustable time delay between each of the relay closures is provided. Operates via a sub-network. Adjustable 1–120 seconds.

45A–J. Load Sequencing Contacts (1–10) (OUTPUT)

Provides the capability for sequential contact closure of up to 10 contacts after a transfer. A single adjustable time delay between each of the relay closures is provided. Operates using the configurable output contacts (Form C). Adjustable 0–120 seconds. Each individual configurable contact has its own adjustable time delay. When more than one contact is supplied, they start the timing sequence at the same time.

45L. Selective Load Shed

Provides an output contact that opens to shed a customer load if the measured kW value exceeds the load shed kW set point value. The load will be picked up if the load restore set point is attained.

47. Transfer Modes for Closed Transition Transfer Switches

Provides available transition transfer modes for a closed transition transfer switch. Closed transition is a "make before break" transfer and retransfer scheme that will parallel (a maximum of 100 ms) Source 1 and Source 2 providing a seamless transfer when both sources are available. The closed transition feature includes permissible voltage difference frequency difference and synchronization time allowance set points. The phase angle difference between the two sources must be near zero for a permitted transfer. These are all programmable set points in the controller.

47C. Closed Transition With Default to In-Phase Transition With Default to Load Voltage Decay

Provides a closed transition transfer as the primary transfer mode. In the event Source 1 and Source 2 fail to synchronize within the permitted voltage difference, frequency difference, phase angle difference and time, then the controller defaults to the in-phase transition with default to load voltage decay operations as described in **Feature 32C** and **32B**. Adjustable frequency difference 0.0–0.3 Hz. Adjustable voltage difference 1–5% volts. Adjustable synchronization time allowance 1–60 minutes.

47D. Closed Transition

Provides a closed transition transfer as the primary transfer mode. Only under a fail-safe condition (i.e., loss of the connected source) will the controller transfer to the alternate source using the load voltage decay operation as described in **Feature 32B**. Adjustable frequency difference 0.0–0.3 Hz. Adjustable voltage difference 1–5% V.

47E. Closed Transition With Default to In-Phase Transition With Default to Time Delay Neutral

Provides a closed transition transfer as the primary transfer mode. In the event Source 1 and Source 2 fail to synchronize within the permitted voltage difference, frequency difference, phase angle difference and time, then the controller defaults to the in-phase transition with default to time delay neutral operation as described in **Features 32D** and **32A**. Adjustable frequency difference 0.0–0.3 Hz. Adjustable voltage difference 1–5 percent volts. Adjustable synchronization time allowance 1–60 minutes.

47F. Closed/Load Voltage Decay

Controllers equipped with Feature Set 47F will perform a closed transition when both sources are synchronized in frequency, phase and voltage. Failure to synchronize will result in an open transition Time Delay Load Voltage Decay transfer. Time Delay Load Voltage Decay uses the load voltage measurements to sense back EMF that is generated when the transfer switch is in the Neutral position.

It provides a delay in transfer in either direction if an unacceptable level is sensed as established by a customer programmed level. The transfer will not take place until the back EMF decays below the acceptable programmed level. This feature has a separate setting of enabling or disabling the operation. If disabled, the transfer switch will not delay in the Neutral position and will transfer between the sources as fast as possible. This feature is not available with the Time Delay Neutral Optional **Feature 32A**.

47G. Closed/Time Delay Neutral

Controllers equipped with Feature Set 47F will perform a closed transition transfer when both sources are synchronized in frequency, phase and voltage. Failure to synchronize will result in an open transition Time Delay Neutral transfer. Time Delay Neutral provides a time delay in the transfer switch neutral position when both sources are open. This delay takes place when the load is transferred in either direction to prevent excessive in-rush currents due to out-of-phase switching of large motor loads.

47H. Parallel Limit Timer

Provides an independent timing relay with NO contact (watchdog timer) activated only during a closed transition transfer. The timing is set to 100 ms per code requirements and will initiate a contact closure that can be used by the end user to annunciate an alarm or to trip an upstream breaker.

48. Communication Modules

Provides communications modules for the transfer switch controllers.

48D. Ethernet Communication (PXG900 Gateway)

Translates Modbus RTU, QCPort or INCOM to Modbus TCP. The PXG900 Gateway includes embedded Web server monitoring of up to 64 connected devices.

48F. Modbus Communication (MPONI)

Provides Modbus RTU protocol via communications module.

48G. Modbus TCP/IP

Provides a third-party device for Modbus 485 to Modbus TCP/IP pass through.

48M1–48M4. I/O Module

Each I/O module provides four additional user configurable inputs and outputs. Up to four additional I/O modules can be added, either by the factory or in the field.

48MRAC. Multi-view Remote Annunciator with Control

Provides remote monitoring of source availability, source position and test status for up to eight transfer switches with the ATC-300+ or ATC-900 controller. Operates using Modbus protocol.

48P. Remote Annunciator Power Supply

Provides a remote mounted power supply providing DC power to the remote annunciator.

48RAC. Remote Annunciator with Control

Provides remote monitoring and control via a color touch screen display for the controllers. Operates using Modbus protocol (MPONI required for the ATC-600/800).

48U. USB Port for Memory Stick

Provides a device panel mounted USB port for uploading or downloading controller set points and for downloading event history.

49. Sensing Isolation Transformer

Provides a set of control power transformers that converts the delta system sensing to a wye sensing input to the controller. The sensing isolation transformer is recommended for high resistance grounded systems and for grounded delta systems.

49A. Sensing Isolation Transformer

Option 49A is available for Magnum ATSs.

49B. Sensing Isolation Transformer

Option 49B is available for MCCB and contactor transfer switches.

49C. Multi-Tap Control Power Transformer

The multi-tap control power transformer is used to step-down voltage to 120 Vac for the transfer switch control circuit. Incoming voltage can be adjusted by moving the tap on the primary side from 208 V, 240 V or 480 V for 60 Hz applications or 220 V, 380 V, 415 V, 600 V for 50 Hz applications.

Option 51. Surge Protection Device

Two types of surge protection devices are used in Eaton automatic transfer switches. Both types meet the requirements for UL 1449 3rd Edition for surge suppression devices and are CE marked. The type CVX is used on Eaton wallmount ATS designs and the Eaton type SPD are used on floor-standing designs.

CVX

The CVX device features a Thermally Protected Metal Oxide Varistor technology and comes with high intensity LED phase status indicators.

SPD

The SPD features a Thermally Protected Metal Oxide Varistor technology. It comes with dual-colored protection status indicators for each phase and for neutral-ground protection mode. It comes with an audible alarm with silence button and a Form C contact.

An optional SPD with surge counter feature package is available. This provides six-digit surge counter with reset button.

51S1B. 50 kA—SPD standard source 1

51S2B. 80 kA—SPD standard source 1

51S3B. 100 kA—SPD standard source 1

51S4B. 120 kA—SPD standard source 1

51S5B. 160 kA—SPD standard source 1

51S6B. 200 kA—SPD standard source 1

51S7B. 250 kA—SPD standard source 1

51S8B. 300 kA—SPD standard source 1

51S9B. 400 kA—SPD standard source 1

51S1C. 50 kA—SPD standard with surge counter source 1

51S2C. 80 kA—SPD standard with surge counter source 1

51S3C. 100 kA—SPD standard with surge counter source 1

51S4C. 120 kA—SPD standard with surge counter source 1

51S5C. 160 kA—SPD standard with surge counter source 1

51S6C. 200 kA—SPD standard with surge counter source 1

51S7C. 250 kA—SPD standard with surge counter source 1

51S8C. 300 kA—SPD standard with surge counter source 1

51S9C. 400 kA—SPD standard with surge counter source 1

51SC8. Remote display panel (8 feet standard)

51SC12. Remote display panel (12 feet)

51SC4. Remote display panel (4 feet)

54. Front Access

54A. Front access cabinet available for all Magnum products. This option will add an additional pull section mounted on the side of the switch.

54B. Upgrade to 316 Stainless Steel

Provides a stainless enclosure with 316 grade. Contact plant for availability.

55B. Source Swap (Normal Bottom/Emergency Top)

Provides ability to designate the Normal Source to be physically located at the bottom of the structure and the Emergency Source to be at the top of the structure. Contact plant for availability.

59a. Silver-Plated Bus

Silver-plated bus is a standard feature for all Magnum-based designs.

59b. Tin-Plated Bus

Tin-plated bus is available as an option for Magnum-based designs.

60. Dedicated Voltage Control Power Transformer

The dedicated voltage control power transformer can be selected for 208/240 V systems where an added buffer is preferred between the incoming power and the micro-processor controller's control power input.

61A. UPS Device with Terminal Block Input

Provides a factory mounted and wired UPS sized to provide power to the ATC controller and the bypass isolation logic controller. Inputs to the UPS are wired out to a terminal block.

61B. UPS 120 Vac Ready, Terminal Block Input

Provides a terminal block input only for customer supplied external mounted UPS that provides power to the logic controller supplied in bypass isolation switches.

61C. Power Loss Buffer for ELC

Provides ride-through power for the ELC contained in automatic transfer switches with bypass isolation. This feature does not provide continuous power for microprocessor controller.

61D. UPS 120 Vac Ready, Terminal Block Ready

Provides a terminal block input only for customer supplied external mounted UPS that provides power to the ATC controller.

61E. 24 Vdc Ready, Terminal Block Ready

Provides a terminal block input only for customer supplied external 24 Vdc power to the ATC900 controller (requires the DCT Module).

61F. Power Loss Buffer ATC Comm (Requires DCT Module)

Provides ride-through power for the ATC-900 controller to maintain communications during a power loss. The power loss buffer provides 24 Vdc to the controller (requires the DCT module).

81A. General Alarm Contact (OUTPUT)

Provides a remote indication that an alarm condition exists on the ATC-900. Remains on until all alarms are resolved and reset at the controller.

81B. ATS Not in Automatic (OUTPUT)

Provides remote indication that the ATS is not in automatic mode.

81C. ATS in Test (OUTPUT)

Provides remote indication that the ATS is currently running a test. The test could be initiated by the device panel engine test pushbutton or automatically using the programmed engine exerciser.

81D. Engine Test Aborted (OUTPUT)

Provides remote indication that an engine test has been aborted. The ATC-900 event log contains detailed event information that can help assess the reason the test was aborted.

81E. Cooldown in Process (OUTPUT)

Provides remote indication that an engine cooldown is in progress.

81F. Engine Start Contact Status (OUTPUT)

Provides remote indication that the engine start contact is calling for the generator to start.

81G. LOAD SHED—S2 Inhibit On (OUTPUT)

Provides remote indication that the emergency inhibit is on.

81GL. LOAD SHED—S2 Inhibit On with White Indicating Light

Provides a 30 mm pilot light on the transfer switch device panel to indicate that S2 Inhibit is on.

81H. ATS on Bypass (OUTPUT)

Provides remote indication that the bypass switch is carrying the load.

81J. Lockout

Provides an input to temporarily disable automatic control. This feature is used to indicate a tripped breaker in a breaker-based transfer switch. It is treated as an alarm and the alarm must be reset to continue automatic operation.

81K. Monitor Mode

Provides an input to disable automatic control in the ATC-900 controller. This function is used for when manual operation is required. The controller continues to accurately monitor source status and set points can be changed; however, no action will be initiated by the controller.

81L. Remote Load Test

Provides an input to initiate a system test using a remote contact closure. The test will run based on the programmed engine test settings in the controller. The settings include with or without load, engine run time, and independent test time delays.

81M. Load Bank Control (OUTPUT)

Provides a remote output to disconnect a load bank if Source 1 fails while the load bank is running. The load bank control output is turned on when an unloaded engine test is in process and the load is connected to the source that is not under test. It is off at all other times. If, while an engine test is in process, the non-test source fails (i.e., Source 1), the test is aborted, which will cause load bank control relay to turn off in anticipation of transferring load to the generator.

81N. Health (OUTPUT)

Provides a remote indication that an alarm condition or loss of control power exists on the ATC-900. Remains on until an alarm condition occurs or control power is lost.

90A. Master Control (OUTPUT)

Provides the user with the ability to use two independent transfer switches in three source systems consisting of a utility and two generator sources. In a three-source system, the Master ATS controls the engine starting and stopping of the Slave ATS. The slave input receives the engine start signal from the Master controller.

90B. Slave Input (INPUT)

The ATC-900 Master/Slave controller functionality provides the user with the ability to use two independent transfer switches in three source systems consisting of a utility and two generator sources. In a three-source system, the Master ATS controls the engine starting and stopping of the Slave ATS. The slave input receives the engine start signal from the Master controller.

Glossary

With respect to their use in this document and as they relate to switch operation, the following terminology is defined:

Available—A source is defined as "available" when it is within its undervoltage/overvoltage/underfrequency/overfrequency (if applicable) set point ranges for the nominal voltage and frequency setting.

Fail-safe—A feature that prevents disconnection from the only available source and will also force a transfer or retransfer operation to the only available source.

Retransfer—Retransfer is defined as a change of the load connection from the secondary to primary source.

Source 1—is the primary source or normal source or normal power source or normal. (Except when Source 2 has been designated the "Preferred Source.")

Source 2—is the secondary source or emergency source or emergency power source or emergency or standby or backup source. (Except when Source 2 has been designated the "Preferred Source.")

Source 1—Failed or fails—Source 1 is defined as "failed" when it is outside of its undervoltage or overvoltage or underfrequency or overfrequency (if applicable) set point ranges for the nominal voltage and frequency setting.

Source 2—Failed or fails—Source 2 is defined as "failed" when it is outside of its undervoltage or overvoltage or under-frequency or overfrequency (if applicable) set point ranges for the nominal voltage and frequency setting for a time exceeding 0.5 seconds after the time delay emergency fail (TDEF) time delay expires.

Transfer—"Transfer" is defined as a change of the load connection from the primary to secondary source except when specifically used as "Transfer to Neutral."

Transfer to Neutral—"Transfer to Neutral" is defined as when the load circuits are disconnected from both Source 1 and Source 2.

Transient Voltage Surge Suppression

Eaton's Clipper Power System —Visor™ series transient voltage surge suppression (TVSS) components can be integrated into any closed transition soft load switch. Surge current ratings 100 kA, 160 kA and 200 kA per phase provide a range of cost-effective facility-wide protection solutions. Status indication on each phase is standard with any TVSS option. Metering and communication capabilities are also available. See Appendix C for details.

Communications

Optional communication capability via Communication Gateway is available, allowing remote data access, control, programming, system interface and dispatch.

System Interface

A system control panel provides a user-friendly interface to the closed transition soft load controller, allowing operators to easily monitor the switching devices position and manually test the generator and the system operations.

Switching Devices Status Lights

- Source 1 open (green)
- Source 1 closed (red)
- Source 1 trip (amber)
- Source 2 open (green)
- Source 2 closed (red)
- Source 2 trip (amber)

Front Panel Control Switches and Lights

The combination of the following pilot devices can be implemented on the unit:

- AUTO/TEST switch
- SYSTEM TEST switch
- TEST MODE switch
- ALARM SILENCE switch
- READY FOR OPERATION lamp (white)—verifies the ATC-5000 status

Optional Intergral Overcurrent Protection Capability

For service entrance applications, Digitrip microprocessor-based trip units can be integrated into the power switching devices. This eliminates the need for the separate upstream protective device, saving installation cost and space. Available with various combinations of long, short, instantaneous and ground fault protection, Digitrips can communicate with Eaton's IMPACC and PowerNet Power Management Systems.

Optional On-Board 24 Vdc Power Supply

On-board 24 Vdc power supply circuit, consisting of two 12 Vdc gel-cell UPS type batteries and battery charger, is available on the unit to provide DC control power to soft load transfer switch components. Engine battery can be connected in the "best battery" circuit as well, further improving the system's reliability.

Optional Components

Description	
Service Entrance Rating	
16N	Overcurrent protection—normal
16E	Overcurrent protection—emergency
16B	Overcurrent protection—both
37A	Service entrance
37B	Service entrance with ground fault
Metering	
18O	IQ Analyzer—normal
18P	IQ Analyzer—emergency
18Q	IQ Analyzer—N/E selectable
18U	IQ Analyzer—load
Plant Exerciser	
23J	Automatic 24 hours/7 days selectable load/no load
Expanded Controller I/O	
25A	Additional discrete and analog I/O for Genset control and monitoring
Space Heater and Thermostat	
41C	400 W heater with thermostat
Surge Protection	
51M4B	Engine control (24 Vdc) surge device
51NA1	100 kA surge device with AdVisor Source 1
51NS1	100 kA surge device with SuperVisor Source 1
51NN1	100 kA surge device with NetVisor Source 1
51QA1	160 kA surge device with AdVisor Source 1
51QS1	160 kA surge device with SuperVisor Source 1
51QN1	160 kA surge device with NetVisor Source 1
51SA1	200 kA surge device with AdVisor Source 1
51SS1	200 kA surge device with SuperVisor Source 1
51SN1	200 kA surge device with NetVisor Source 1
On-Board 24 Vdc Power Supply	
24C	Battery charger and gel-cell batteries
Protective Devices	
53A	Beckwith M-3410A
53B	Schweitzer SEL-547
53C	Basler BE1-951
53D	Beckwith M-3520
53E	Schweitzer SEL-351
53F	Basler BE1-IPS100
Communication	
54B	External Communication Gateway
54C	Serial Modbus Over Ethernet
Field Startup	
56A	2-day startup (includes 1 day for travel)

Remote Annunciator Controller

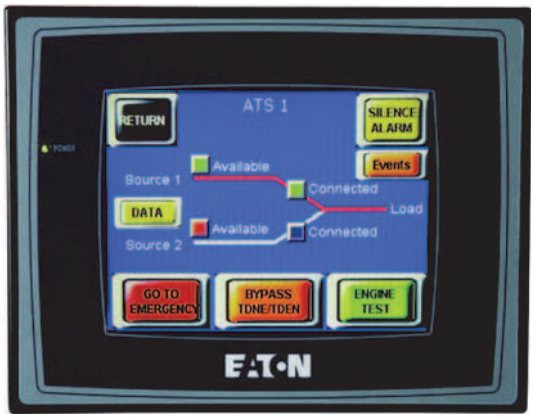

Contents

Description	*Page*
Remote Annunciator Controller	**V2-T5-118**
Dimensions	**V2-T5-120**
Wiring Diagram	**V2-T5-120**

5

Remote Annunciator Controller

Product Description

Eaton's HM*i* remote annunciator controller series provides users with the ability to remotely monitor and control multiple transfer switches from one intuitive, touchscreen user interface.

Remote Monitoring, Enhanced Safety

Tightening arc-flash regulations and requirements for personal protective equipment are driving more and more end users toward the use of remote monitoring and control devices. Eaton's HM*i* remote annunciator controller offers a simple and cost-effective means of providing transfer switch monitoring and control.

Designed to meet today's most common specifications, including the City of Chicago Electrical Code, the HM*i* remote annunciator controller connects to Eaton's ATC-300+, 600 or 800 controller via Modbus® 485 and serves as an extension of the transfer switch controller.

One Product, Multiple Advantages

The HM*i* remote annunciator controller has a multi-view option that allows end users to monitor and control one to four transfer switches. Additional product advantages include the ability to:

- Initiate a transfer to the generator for peak shaving
- Perform a remote test based on programmed engine exerciser set points
- View and silence system alarms
- Perform basic troubleshooting using the source data and alarm history screens

Features

- Monitors and controls one to four transfer switches
- Mimics bus display for source availability, source position and preferred source monitoring
- Audible alarm with alarm silence option when on source 2
- Remote control features include transfer to source 2, engine test, time delay bypass and alarm silence
- Date- and time-stamped alarm history
- 6-inch color touch-screen display
- User-assignable transfer switch designations
- Compatible with Eaton's ATC-300+, ATC-600 and ATC-800 ① microprocessor controllers
- Password protection for all control functions
- Modbus 485 communication
- Flush mounted

Design Highlights

- Uses Eaton's HM*i* (human-machine interface) series
- Display type: 6-inch TFT, LED backlight
- NEMA® 4X / IP65
- 24 Vdc operating voltage (power supply optional)
- 85 dB multi-tone-frequency alarm buzzer
- Operating temperature 32° to 122 °F (0° to 50 °C)
- Storage temperature –4° to 140 °F (–20° to 60 °C)
- 3 V lithium battery backup (CR2032 x 1)

ATS Individual Unit Screen

- Monitors source availability, source position indication, alarm status, ATS in test, communication status and ATS in non-automatic mode for a single transfer switch
- Initiates peak shaving and engine tests, bypass time delays ① and silence audible alarms

Note

① Requires MPONI communication module for use with the ATC-600 or ATC-800 controller.

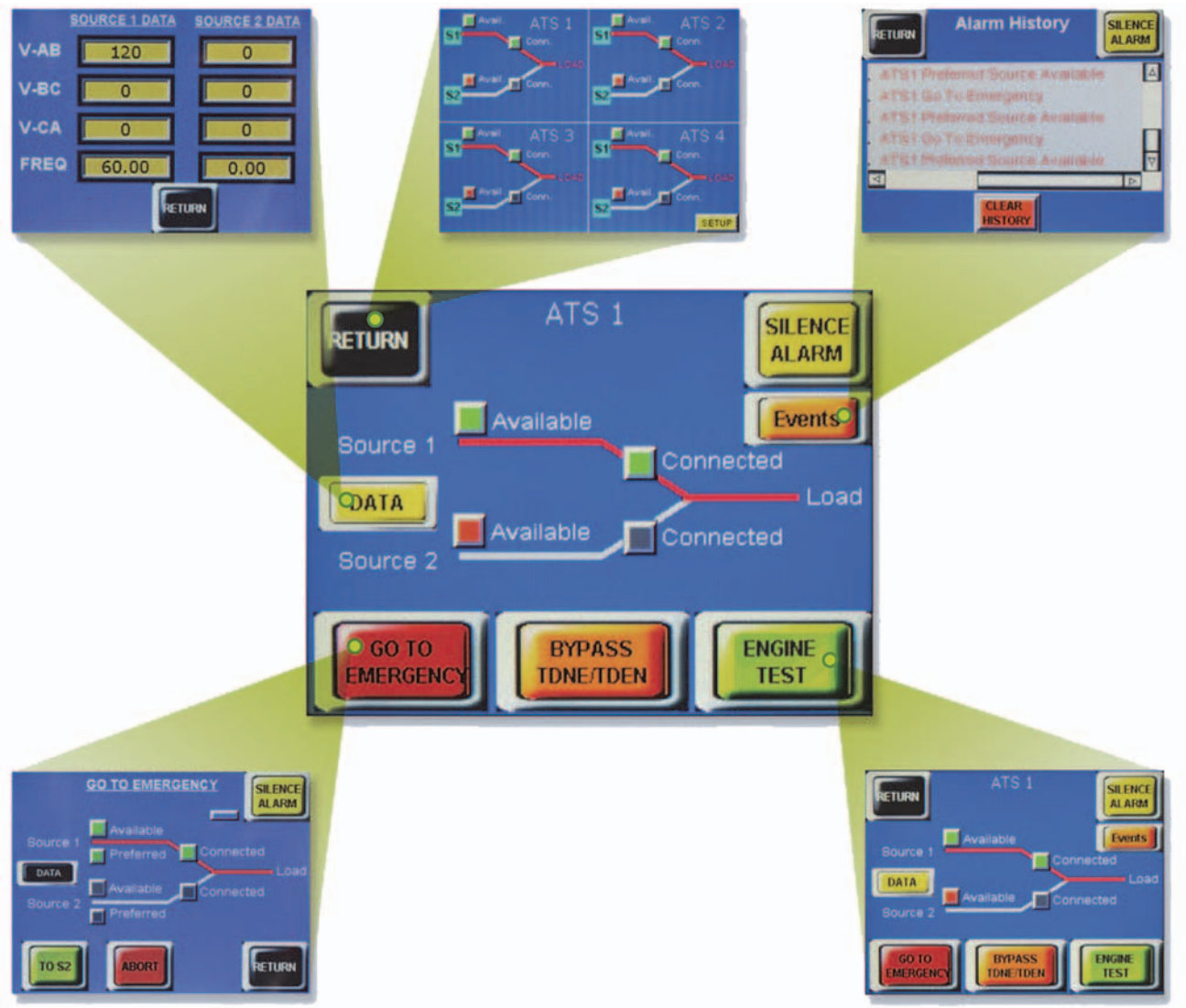

ATS Multi-Unit Screen (ATC-300+ Only)

- Monitors source availability, source position and alarm status for up to four transfer switches
- Password-protected setup screen for transfer switch designations
- Access to the ATS individual unit home screen

Source Data Screen

- Monitors values for source 1 and source 2 voltage and frequency

Alarm Screen

- Monitors all alarm messages with the touch of a button right from the HM*i* display. Alarm messages include:
  - Source 2 closed (audible alarm)
  - Overvoltage
  - Undervoltage
  - Overfrequency
  - Plant exerciser
  - Engine test
  - Remote engine test
  - Voltage unbalance ①
  - Phase reversal ①
  - Go to emergency
  - Lockout
  - Failed to sync (phase angle)
  - Failed to sync (frequency difference)
  - Engine test or plant exerciser
  - Source 1 error
  - Source 2 error

Engine Test Screen

- Provides password protected control to start and abort an engine test. The engine test will run according to the controller-programmed set points for duration and with or without load
- Provides control to bypass the source 1 to source 2 and source 2 to source 1 time delays

Go To Emergency Screen (Peak Shaving)

- Provides password protected control to force transfer to source 2 regardless of the condition of source 1. This feature is failsafe, meaning the ATS will automatically return to source 1 in the event of a source 2 failure
- Provides control to bypass the source 1 to source 2 and source 2 to source 1 time delays

Note

① ATC-300+ controller only.

Dimensions

Approximate Dimensions in Inches (mm)

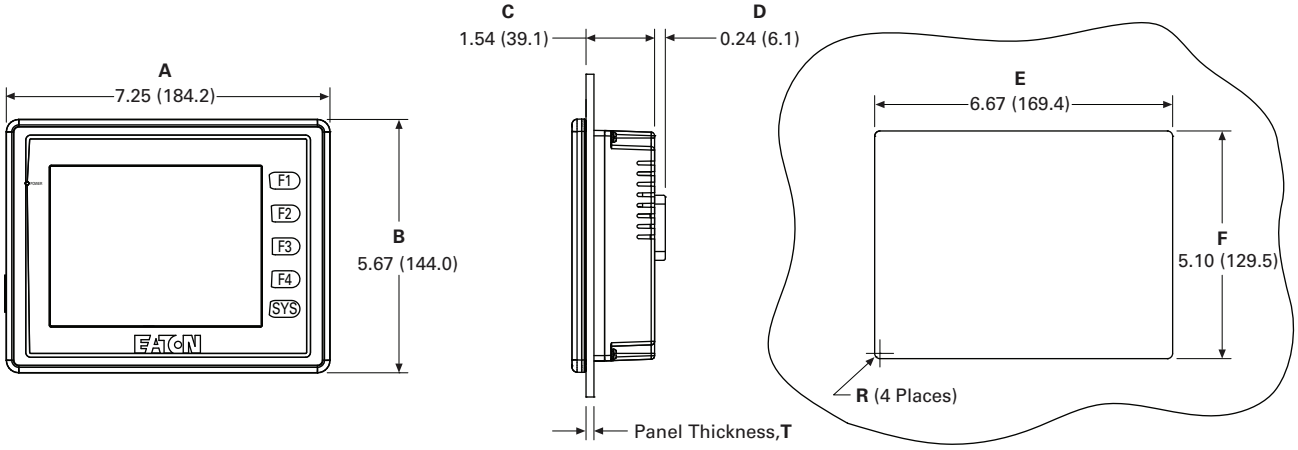

Front View Side View Cutout

Catalog Number	Dimension A	Dimension B	Dimension C	Dimension D	Dimension E +0.04 (1.0) –0	Dimension F +0.04 (1.0) –0	Radius R	Panel Thickness T
HM106CU	7.25 (184.2)	5.67 (144.0)	1.54 (39.1)	0.24 (6.1)	6.67 (169.4)	5.10 (129.5)	0.12 (3.0)	0.06–0.12 (1.5–3.0)

Wiring Diagram

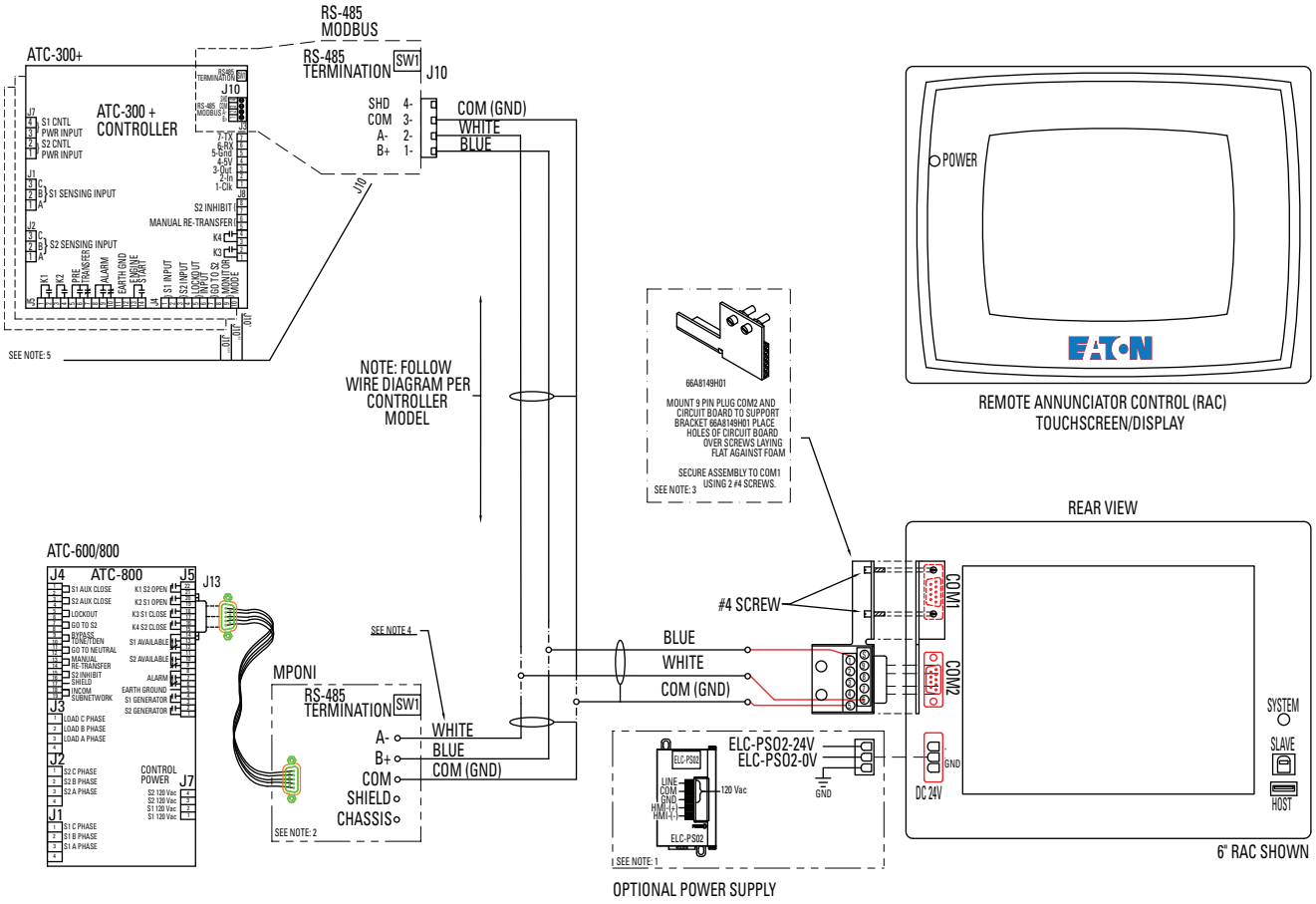

kW Conversion Chart

kW to Ampere Conversion Chart

Three-Phase Ampere Table at Common Line-to-Line Voltage

kW ①	200 V	208 V	220 V	230 V	240 V	380 V	400 V	415 V	460 V	480 V	600 V
5.0	18	17	16	16	15	9	9	9	8	8	6
7.5	27	26	25	24	23	14	13	13	12	11	9
10.0	36	34	33	31	30	19	18	17	16	15	12
15.0	54	52	49	47	45	28	27	26	24	23	18
20.0	72	69	66	63	60	38	36	35	31	30	24
25.0	90	87	82	78	75	47	45	43	39	38	30
30.0	108	104	98	94	90	57	54	52	47	45	36
40.0	144	139	131	126	120	76	72	70	63	60	48
50.0	180	173	164	157	150	95	90	87	78	75	60
60.0	217	208	197	188	180	114	108	104	94	90	72
75.0	271	260	246	235	226	142	135	130	118	113	90
80.0	289	278	262	251	241	152	144	139	126	120	96
100.0	361	347	328	314	301	190	180	174	157	150	120
125.0	451	434	410	392	376	237	226	217	196	188	150
150.0	541	520	492	471	451	285	271	261	235	226	180
175.0	631	607	574	549	526	332	316	304	275	263	210
200.0	722	694	656	628	601	380	361	348	314	301	241
250.0	902	867	820	784	752	475	451	435	392	376	301
300.0	1083	1041	984	941	902	570	541	522	471	451	361
350.0	1263	1214	1148	1098	1052	665	631	609	549	526	421
400.0	1443	1388	1312	1255	1203	760	722	696	628	601	481
500.0	1804	1735	1640	1569	1504	950	902	870	784	752	601
600.0	2165	2082	1968	1883	1804	1140	1083	1043	941	902	722
700.0	2526	2429	2296	2197	2105	1329	1263	1217	1098	1052	842
800.0	2887	2776	2624	2510	2406	1519	1443	1391	1255	1203	962
900.0	3248	3123	2952	2824	2706	1709	1624	1565	1412	1353	1083
1000.0	3609	3470	3280	3138	3007	1899	1804	1739	1569	1503	1203

Note

① At 0.8 power factor.

Pow-R-Way III Upward Elbow

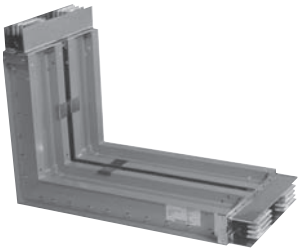

6.1 Pow-R-Way III

Pow-R-Way III Busway

Product Description V2-T6-2
Features, Benefits and Functions V2-T6-12
Standards and Certifications V2-T6-13
Product Support V2-T6-13
Catalog Number Selection V2-T6-14
Product Selection V2-T6-15
Technical Data and Specifications V2-T6-19
Dimensions V2-T6-23

6.2 Pow-R-Flex

Pow-R-Flex Busway

Product Description V2-T6-28
Features, Benefits and Functions V2-T6-32
Standards and Certifications V2-T6-33
Technical Data and Specifications V2-T6-38
Dimensions V2-T6-41

6.3 100 A Busway

100 A Busway

Product Description V2-T6-46
Application Description V2-T6-46
Product Selection V2-T6-46
Options and Accessories V2-T6-47
Technical Data and Specifications V2-T6-48

Learn Online

Pow-R-Way III Busway

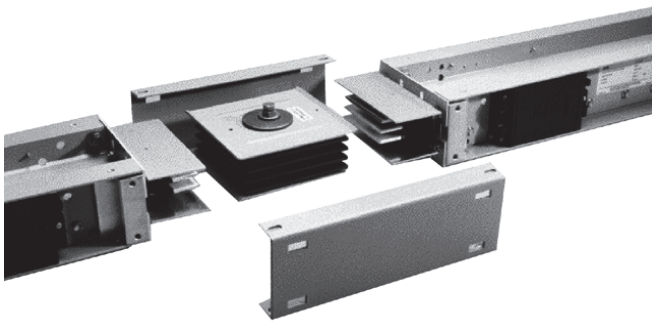

Contents

Description	*Page*
Pow-R-Way III Busway	
Features, Benefits and Functions	**V2-T6-12**
Standards and Certifications	**V2-T6-13**
Product Support	**V2-T6-13**
Catalog Number Selection	**V2-T6-14**
Product Selection	**V2-T6-15**
Technical Data and Specifications	**V2-T6-19**
Dimensions	**V2-T6-23**

Pow-R-Way III Busway

Product Description

Superior Housing Design and a True Sandwich Design Maximize Busway Performance

Eaton's Pow-R-Way III® is constructed with a lightweight and durable, two-piece, aluminum-extruded housing. The non-ventilated housing design excludes potential points of penetration by moisture or dust. Busbars for plug-in applications have full-sized conductor tabs welded by a fully automated state-of-the-art welding process. This design extends the contact surfaces outside of the busway housing and into the plug-in outlet. The benefits of the true sandwich design for both plug-in and feeder busway include improved coordination and heat dissipation, better bracing and the elimination of the "chimney effect."

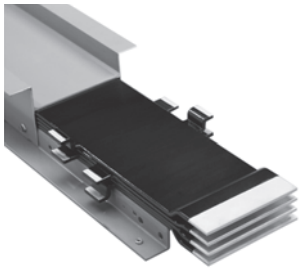

Cut-Away Section of Plug-In Busway

Epoxy Insulation Provides Exceptional Performance

The phase and neutral bars are insulated with Class B, 130 °C, epoxy insulation applied by an automated fluidized bed process. This application insulates the conductors in a precise and controlled manner to ensure smooth, continuous, high quality protection. Following the epoxy insulation process, all contact surfaces are silver-plated to provide an extremely durable connection. Tin-plating is also an option.

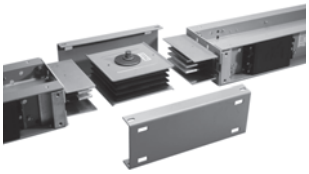

Indoor Joint Assembly

Pow-R-Way III Bridge Joint Reduces Installation Time and Provides Flexibility for Future Modifications

Pow-R-Way III joint connections are made with the rugged Pow-R-Bridge joint package. A Pow-R-Bridge is installed on each section of busway prior to shipment. Job site connections are made quickly by releasing the bridge joint bolt, moving the next section into place, and retightening the bolt. Torque-indicating, double-headed bolts with fall-away instruction tags are provided to ensure that proper installation torque is achieved. The Pow-R-Bridge provides an adjustment in section length of up to ±0.5-inch (12.7 mm) at each joint.

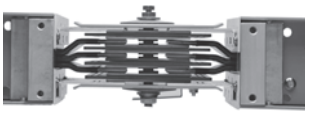

Bridge Joint Assembly

Pow-R-Way III Offers Grounding and Neutral Options to Meet Every Customer Preference and Need

The aluminum housing is UL listed as a 50% integral ground path and is provided as a standard, economical ground system. A 50% internal ground bar is also available. In certain industrial applications, a ground path greater than 50% may be required. Pow-R-Way III can solve this problem in a cost-efficient manner through combining the 50% integral housing ground with the 50% internal ground. To meet the growing demand for grounding isolation, Pow-R-Way III also offers a 50% isolated ground bar. When customers are concerned about harmonics and overheating generated by nonlinear loads, Pow-R-Way III provides a solution through a fully rated 200% capacity neutral bar.

Joint End

A Space-Saving Innovation—The Corner Joint Elbow

The Pow-R-Way III corner joint combines the features of the Pow-R-Bridge with reduced elbow leg lengths. Due to its compact design, the corner joint allows for layouts that provide optimum use of space and increases available plug-in openings.

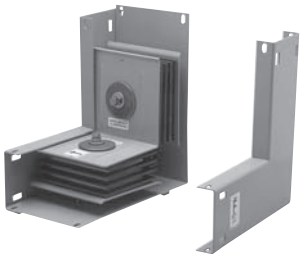

Upward Corner Joint

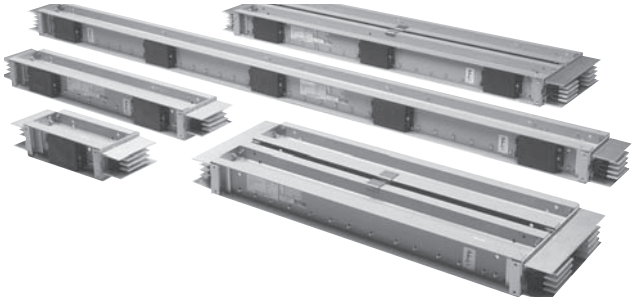

Straight Lengths

A Complete Line of Fittings for Indoor and Outdoor Applications

Pow-R-Way III offers an extensive range of fittings to meet every application need. Flanges, elbows, end cable tap boxes and end closers are used in basic busway routing. For more complex layouts, combination elbows and offsets can be used along with transformer throats, vault flanges, reducers and expansion joints.

Standard Switchboard Flange

End Cable Tap Box

Plug-In Unit

Outdoor Joint Assembly

Upward Elbow

Enhanced Bus Plug Design Facilitates Installation and Improves Safety

Pow-R-Way III plug-in protective devices are available in circuit breaker and fusible switch designs. Standard features include: oversized enclosures, extended ground and neutral bars, line side barriers, bus plug alignment pin, busway interlock and improved clamp and guides.

Advanced bus plugs provide protection, communication and coordination capabilities using the Visor™ Series (SPD), Energy Sentinel™, Digitrip™ IQ OPTIM™, Advantage™ motor control components and receptacle plugs.

Final Busway Assembly

Rearward Corner Joint Assembly

High 6-Cycle Short-Circuit Ratings Optimize Coordination Between Busway and Power Equipment and Meet High Quality Standards

All ratings of Pow-R-Way III have been tested to 6-cycle standards and have achieved a minimum rating of 85 kA and a maximum rating of 200 kA rms symmetrical.

Typical Busway Installation (Torque Indicating Bolt)

General Information

- Determine the total footage, all fittings and accessories for entire busway run. Price the total footage by type and system requirements. Round footage up to the nearest foot. Add the fabrication charge for the fittings. Add any additional accessories required for the total price of the busway run
- See NEC 364.11 for Reducer Application
- Fusible reducers are 600 V maximum; fuses are not included

Transformer Connections

- Transformer tap bus extensions do not include drilling or lugs
- Transformer throats include flexible connectors

Commercial Metering Connections

- For use with 33MM, 37MM and 37SS meter stack modules; order separately
- Main breaker units include circuit breaker and trip units
- 1200 A or greater main devices must be center fed when installing 800 A residential meter sockets and 1200 A commercial meter sockets
- Spacer kit 3MMBSK may be required when stacks are mounted on right-hand side in EUSERC areas
- Class T fuse clips only; fuses not included
- Compatible with indoor corner elbow accessory 3MMEB12 and 3MMEB16
- In-line metering PTO with no overcurrent protection should only be used with six meter sockets/tenant main circuit breakers or less, or applied per local code

Plug-In

- Straight sections of plug-in busway are available in 2 ft (0.6 m) increments from 2 ft (0.6 m) minimum to 10 ft (3 m) maximum. Pow-R-Bridge joint is included

Sprinkler-Proof Plug-In

- For sprinkler-proof plug-in, multiply the plug-in price by 1.15 and use outdoor pricing for the feeder busway

Feeder

- Straight sections of feeder busway are available in 1/8-inch (3.2 mm) increments from 16 inches (406 mm) minimum to 10 ft (3 m) maximum. Pow-R-Bridge joint is included. Busway must carry at least a 50% load in all outdoor applications

Hangers/Pow-R-Bridge

- The busway price includes one horizontal hanger per 10 ft (3 m) of busway and one Pow-R-Bridge joint per connection. All vertical hangers and any additional horizontal hangers should be added to the total price

Ground

- A 50% integral housing ground is provided as standard. The housing ground can be used in combination with the internal ground or the isolated ground to achieve a 100% ground rating

Standard and Flush Flanges

Flanges provide a direct connection to low voltage switchgear, switchboards, motor control centers and other apparatus. Cutout dimensions and drilling plans are provided with the customer drawings, and it is the responsibility of the switchgear manufacturer to provide the opening, flange drillings, connecting hardware and bus risers in their equipment. For proper coordination between busway and other equipment, detailed drawings, including switchgear orientation, must accompany the order. A standard flange can be supplied to the left or right of a section, as required. A flush flange is used when the busway must lay close to the top of a switchboard. The edge of the busway is 1.25 of the switchboard.

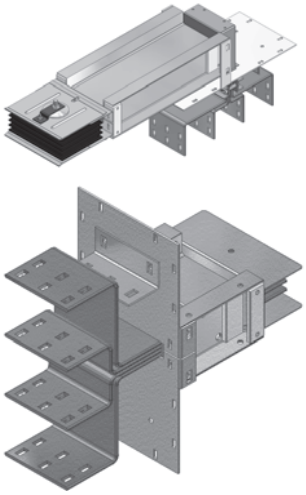

Elbow Flanges

An elbow flange is a combination of a standard elbow and a standard flange fabricated into a single fitting. Elbow flanges are typically used when the minimum leg lengths for either the standard elbow or the standard flange cannot be maintained.

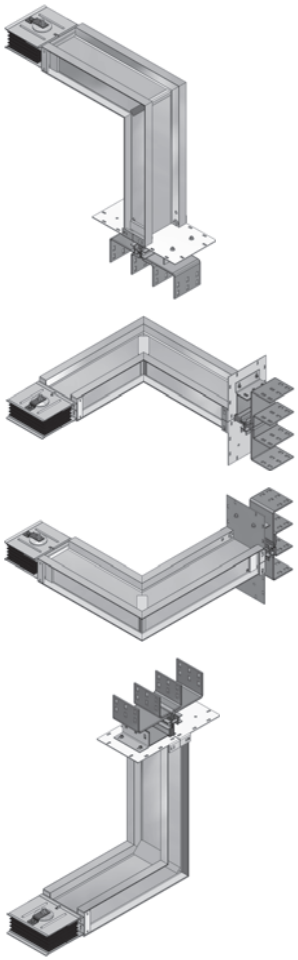

Traditional Indoor and Outdoor Elbows

Elbows are used to make 90° changes in the direction of busway runs. The four types that are available are forward, rearward, upward and downward.

Corner Joint Elbows

The Pow-R-Way III corner joint elbow can be installed in areas where a traditional 90° turn could never have been accomplished before.

Pow-R-Way III corner joint elbows can solve any serious pathway problem and contribute to successful layouts with minimal space requirements. The corner joint elbow is UL listed for indoor applications only and is also certified for seismic withstand capability to worst-case, Zone 4 levels.

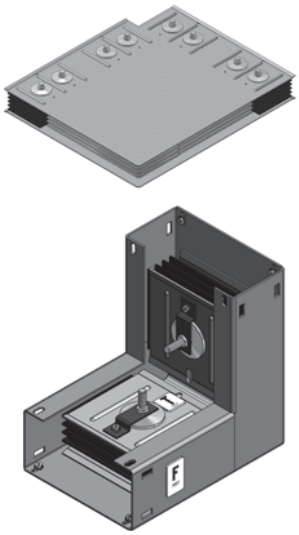

For Indoor Use Only

Special Angle Elbows

Special angle elbows are traditional elbows that allow the direction of the busway runs to change at angles greater than 90°. They allow easy routing through non-traditional corridors. The four types offered are forward, rearward, upward and downward.

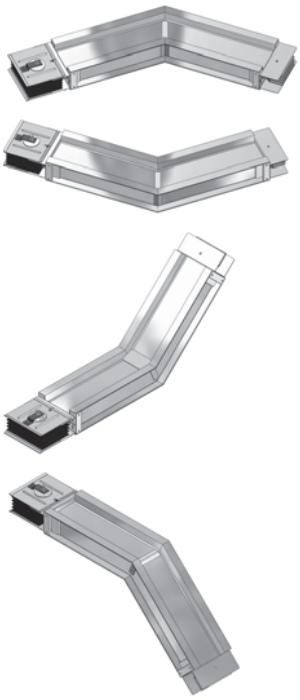

Tees

A tee is a busway fitting suitable for connection in three directions.

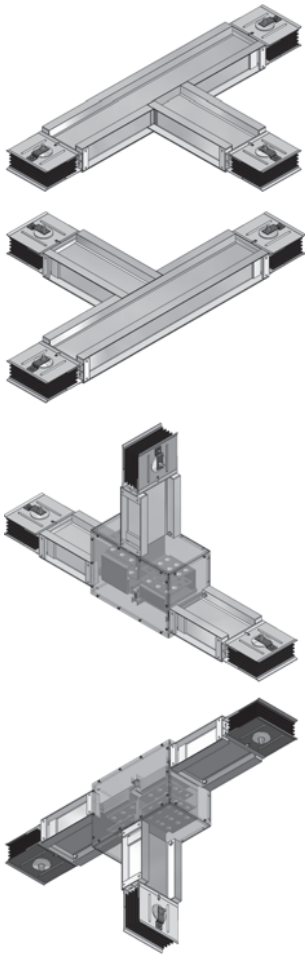

Crosses

A cross is a busway fitting suitable for connection in four directions. It is applied when a bus run must branch off in three directions, all in the same plane.

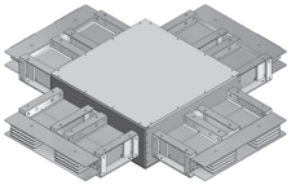

End Cable Tap Box

End cable tap boxes are used to feed a run of busway with cable and conduit or where loads served by busway are connected without the need for overcurrent protection.

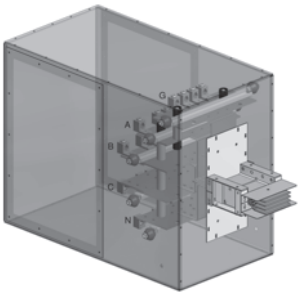

Center Cable Tap Box

Center cable tap boxes are used to center feed a run of busway with cable and conduit or where loads served by the busway are connected without the need for overcurrent protection.

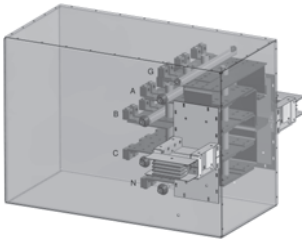

Weatherheads

Weatherheads are used for service entrance connections to busway.

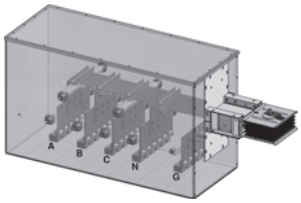

Vault Flanges

Vault flanges are used to enter a utility vault for termination to the utility transformer. Each vault flange is custom designed to meet each specific utility specification. Vault flanges may look similar to those shown in figure below.

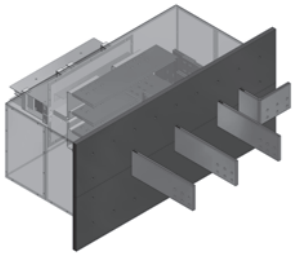

Expansion Joints

Expansion joints accommodate the expansion and contraction of busbars with respect to the enclosure. They compensate for the difference in the coefficient of expansion of the aluminum housing and the copper or aluminum busbars. Expansion joints must be used wherever a run of busway crosses an expansion joint of a building. They should also be installed in the center of extremely long straight runs of busway; one every 300 ft (91 m) for copper or one every 225 ft (68 m) for aluminum.

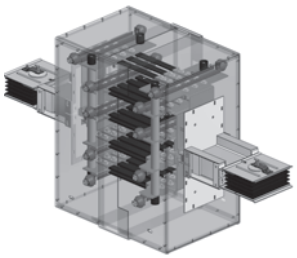

Phase Transpositions

Phase transposition fittings are used in applications where a phase rotation is needed due to a change in phasing from the source equipment to the load equipment. Both 90° and 180° rotations are possible. In each case, all conductors are rotated.

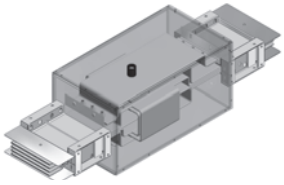

Non-Protected Reducers

Non-protected reducers are used to reduce the ampacity of the busway without overcurrent devices. Per NEC Section 364.11, for industrial applications, no overcurrent protection is required where the busway is reduced in size, provided the length of the smaller busway does not extend more than 50 ft (15.2 m) and has a current rating of at least one-third of the first upstream overcurrent device.

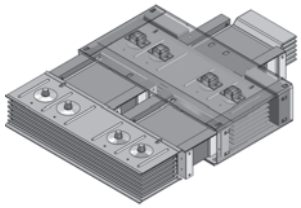

Protected Reducers

Protected reducers are used to reduce the ampacity of busway using either a circuit breaker or a fused, non-automatic circuit breaker overprotection device. Both serve as a disconnecting means. The line side of the cubicle is connected to the higher rated busway and the load side is connected to the lower (reduced) rated busway.

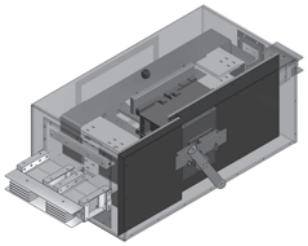

Transformer Throat Connections

A transformer throat is used when making connections to a liquid-filled substation transformer. All transformer throat connections include flexible connectors between the transformer low voltage spades and Pow-R-Way III busbars. For transformers with drilled flanges, the busway will bolt to the transformer throat instead of using a sealing ring.

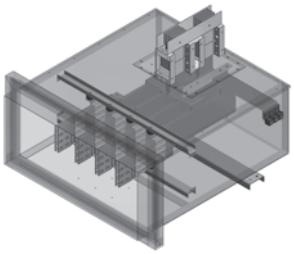

Transformer Flange Connections

Transformer flange connections are used when making a connection to a dry-type substation transformer. Transformer flange connections include flexible connectors between the transformer low voltage spades and the Pow-R-Way III flange busbars.

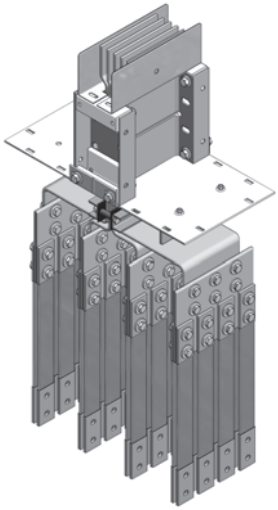

Single-Phase Transformer Taps

Single-phase transformer taps arrangements are used for connections to three single-phase transformers. The bus extensions do not include drilling or lugs.

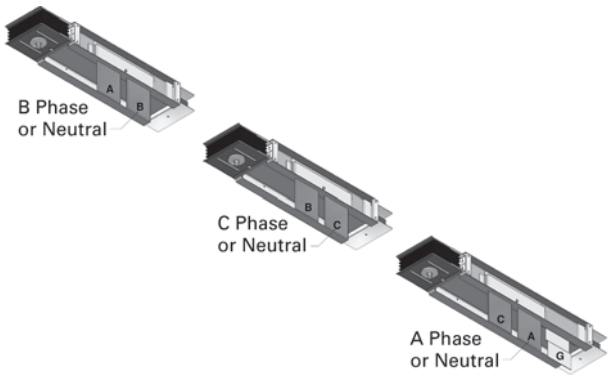

Three-Phase Transformer Taps

Three-phase transformer taps are used when making connections to a three-phase transformer. The bus extensions do not include drilling or lugs.

In-Line Power Takeoff

Main Circuit Breaker PTO

The in-line main circuit breaker PTO shown in figure to the left is available with trip ratings from 300 A up to 1200 A; using L-, M- and N-Frame circuit breakers. This device is indoor rated and may be sprinkler-proofed upon request.

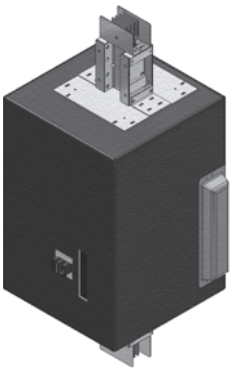

Main Fusible Switch PTO

The in-line main fusible switch PTO shown in figure to the left is available with 400, 600 and 800 A switches; using Class "T" fuses. This device is indoor rated only. The switch handle is mounted in front, eliminating interference with the meter sockets and the need for spacers between the main device and the meter stack. It comes with a hinged door, giving easy access to the fuses mounted below the main switch.

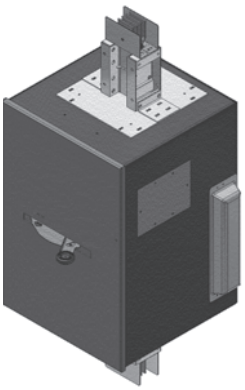

Unprotected PTO

The in-line PTO with no main device shown in figure to the left comes with 1200 A horizontal cross bus as standard. This device is intended for use with six or fewer meter sockets, or as local code permits.

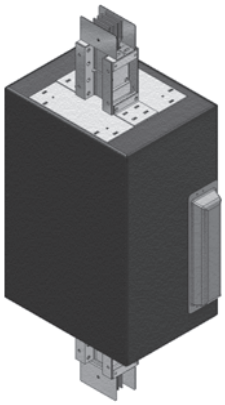

Offsets

An offset is used to avoid obstacles and to conform to the building's structure. It is two elbows fabricated into a single fitting for use where space restrictions prohibit the use of two standard 90° elbows.

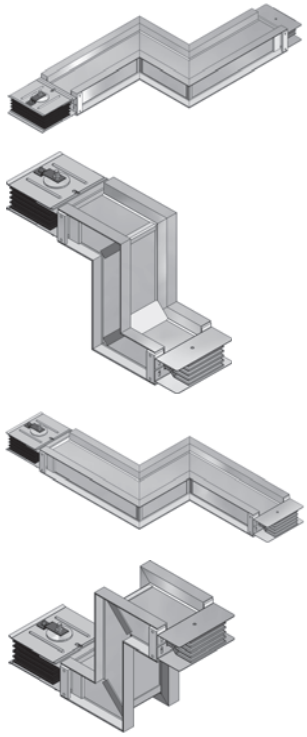

Pow-R-Way III Adapters

A complete line of adapters are available to enable the user to add to existing old-line Westinghouse® or obsolete Cutler-Hammer® bus runs with the Pow-R-Way III design. The specific Westinghouse product lines are low impedance busway, current-limiting busway, Pow-R-Way and Pow-R-Way II. The obsolete Cutler-Hammer designs are CP2, CP3 and CP4 Safetybus.

The adapters allow the incorporation of present-day technologies, available in Pow-R-Way III plug-in units, into existing busway systems. State-of-the-art features such as energy monitoring, transient voltage surge suppression and coordination/communication capabilities can all be added to existing distribution systems without having to upgrade and replace entire runs of busway.

Special adapters to competitive busway products are also available. Please contact the Greenwood factory for information.

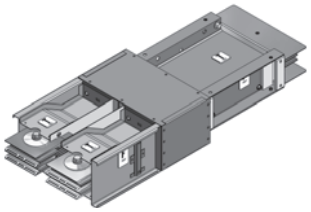

Power Where You Need it!

As a leader in providing quality, robust, cutting-edge electrical distribution equipment, Eaton understands the importance of providing usable power access in a variety of applications. Eaton's Pow-R-Way III busway continues to offer electrical distribution solutions that are flexible and without limitations, and are energy efficient, saving time and money.

Pow-R-Way III Receptacle Plug-In Units

Eaton now offers a full line of receptacle plug-in units for use on Pow-R-Way III busway. Pow-R-Way III receptacle plug-in units come fully assembled and wired, reducing installation time. They are UL listed and offer a complementary line of accessories. Eaton's unique design makes them the most flexible receptacle units in the industry.

Data Centers—Data racks continue to process more information at higher speeds with constantly changing demands. Pow-R-Way III receptacle plugs offer the highest ampere ratings in the industry. Busway and receptacle plugs above the data racks provide faster installation, faster connectivity, easier rack changes and upgrades, and will run cooler than traditional cable methods.

Retail—As retail environments change meeting customer demands, Pow-R-Way III busway and receptacle plugs help make floor layout and display changes easier. Receptacle plugs allow for easy power access, eliminating costly conduit and cable work.

Schools and Laboratories—Pow-R-Way III receptacle plugs offer safe power access for instrumentation and other lab equipment at the point of use.

Machine Shops—Pow-R-Way III busway and receptacle plugs offer quick power connection for shop equipment and make it easy to change shop layouts as demands change.

Light Industrial—Pow-R-Way III busway and receptacle plugs help make manufacturing and assembly lines more flexible. Receptacle plugs bring easy power access for tools and equipment being used on the lines.

For application and layout assistance, and for additional information, please contact your local Eaton sales office or Eaton authorized distributor.

Fused Duplex Receptacle Plug-In Unit

These units allow you to quickly add standard receptacle power and come with the following features:

- Two fix-mounted NEMA 5-20R or L5-20R duplex receptacles
- Fuse protection for each duplex receptacle
- 120 V maximum, single-phase

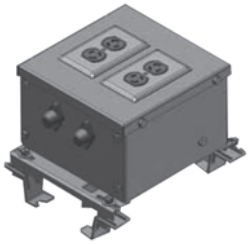

Fix-Mounted Duplex Receptacle

Single Receptacle Plug-In Unit

These units are configured to order based upon the type and size of receptacle ordered, and offer the following features:

- One single or duplex receptacle. Straight blade or twist lock, 5–30 A
- 240 V maximum, single-phase
- Type CH single-pole or two-pole circuit breaker protection
- Receptacles can be fix-mounted or cord-mounted
- Cord lengths are 1–25 feet in 1-foot increments

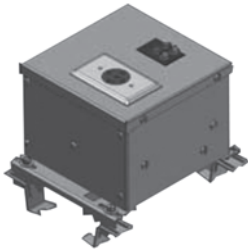

Fix-Mounted Single Receptacle

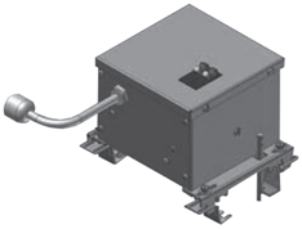

Cord-Mounted Single Receptacle

Quad Receptacle Plug-In Unit

These units are configured to order based upon the quantity, type and size of receptacles ordered. Any combination of receptacles can be ordered and offer the following features:

- Two to four receptacles. Any combination and size of standard NEMA configured receptacles
- 240 V maximum, three-phase
- Type CH single-pole, two-pole or three-pole circuit breaker protection
- Receptacles can be fix-mounted or cord-mounted
- Cord lengths are 1–25 feet in 1-foot increments

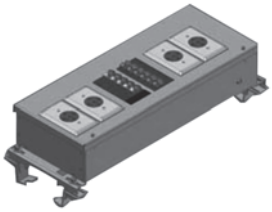

Fix-Mounted Quad Receptacle

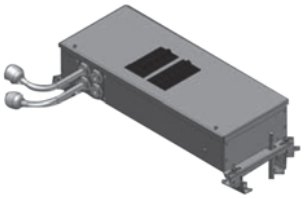

Cord-Mounted Quad Receptacle

SPD Plug-In Devices

The Pow-R-Way III plug-in device product offering includes a surge protective device (SPD) that is ideal for busway fed distribution systems. A transient voltage is a random, high-energy, short duration electrical anomaly. These high-energy surges can disrupt, damage or destroy sensitive microprocessor-based equipment. Eaton has developed the SPD family of products to ensure that quality power is supplied to commercial, industrial, medical and institutional facilities.

The SPD not only protects against externally created impulse transients such as lightning, utility capacitor switching and disturbances emitted by adjacent facilities, but it also provides needed protection against internal transients. This type of transient is generated within a facility's own distribution system. Sources of internally generated or ringwave transients are imaging, equipment, variable frequency drives, lighting dimmers, arc welders, and the switching on and off of electrical distribution equipment. It is estimated that more than 80% of surge disturbances are actually caused by internal transients.

The SPD also filters repetitive electrical line noise (EMI/RFI), which is defined as any unwanted electrical signal that produces undesirable effects in the circuits of sensitive electronic equipment or disturbances that are two times peak voltage. The suppression of AC transients is accomplished through the use of metal oxide varistors (MOVs) that provide a low impedance path to divert surges away from loads. Electrical line noise and ringing transients are eliminated by adding filtering capacitors to the suppression device.

Not all SPD units on the market have filtering capabilities. The benefits of combining SPD and filtering are reduced MOV stress, resulting in a longer life cycle, lower let-through voltage, better noise attenuation levels and increased reliability.

Without protection devices, electronic-based loads and microprocessors are not provided with the noise- and disturbance-free power that they require. Because microprocessors are now common in those facilities, specifiers must ensure that the AC power supply is properly filtered. Significant performance advantages are achieved by integrating SPD filters into busway systems. Because the SPD unit is directly connected to the busway it is able to minimize let-through voltage and to isolate critical loads that are fed from a protected busway run. Due to the integrated design, the SPD bus plug saves the user-needed wall space and greatly reduces the installed project cost. The SPD bus plug is furnished with a breaker disconnect.

SPD Bus Plug

IQ Energy Sentinel Bus Plugs

The IQ Energy Sentinel is a UL listed microprocessor-based metering module capable of communicating energy usage and demand values over Eaton's PowerNet™ power monitoring network. These innovative submetering devices are designed to mount-directly to Series C® molded-case breakers through 400 A and are available for universal mounting through 2500 A.

It offers a centralized alternative to individually mounted wattmeters, watt-hour meters and watt-demand meters. Key advantages include unmatched savings in space, lower installation costs, and the capability to communicate data readings in a variety of ways. IQ Energy Sentinels with built-in CTs and communication capability have the added benefit of overall system accuracy. The Energy Sentinel mounts on the load side of Eaton F-, J- and K-Frame breakers within the bus plug enclosure. The Energy Sentinel is also available for fusible plug-in units, which use external CTs within the plug-in enclosure.

Submetering application examples for the Energy Sentinel include energy monitoring and demand management, energy cost analysis/allocation and tenant or interdepartmental billing.

To accomplish the communication system, the customer must provide a twisted pair communication cable in 1/2-inch (12.7 mm) conduit connecting the IQ Energy Sentinel to an Eaton Central Energy Display (CED) or a customer PC to display and collect the information.

The IQ Energy Sentinel offers the user full energy monitoring capability in a compact, cost-effective module ideally suited to busway application.

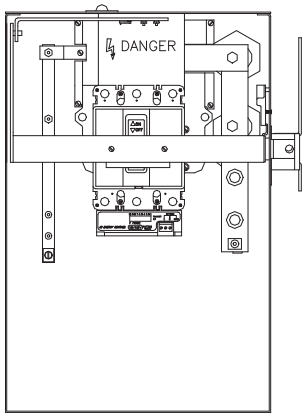

Ground Detector/Neutralizer Bus Plug

In rare cases, busbars in a busway system pick up static electricity. In order to discharge this potential, a neutralizer and a ground detector bus plug is available. The unit has three 18,000 ohm resistors connected between the busbars and the ground. Static electricity is discharged through these resistors.

A neon lamp is wired in series with the busbar and part of the resistor and burns continuously. If there is a ground anywhere on the system of a lower resistance than the path through the lamp, the lamp will go out, indicating that there is a short in the system.

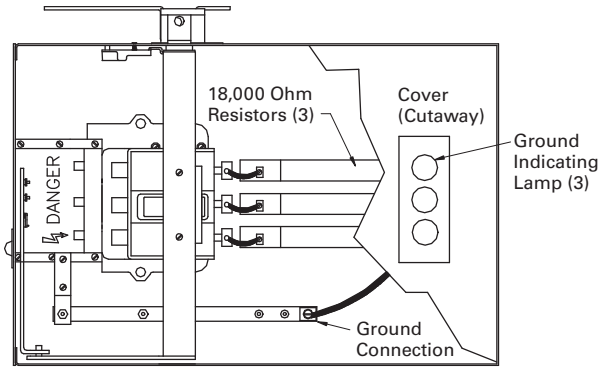

Combination Starter Bus Plugs

Eaton's Freedom™ and Advantage™ motor starters are included in the Pow-R-Way III bus plug product offering. Freedom motor starters offer state-of-the-art features that ensure greater value, flexibility and performance in the toughest commercial and industrial applications.

Advantage motor starters have features including a solid-state, heaterless overload relay with built-in ground fault protection. Advantage also features communication capabilities and an on-board micro-processor that controls the contactor magnet to eliminate burnout in low voltage or varying control circuit conditions.

Plug-in combination starters or contactors are mounted in enclosures identical to the circuit breaker and fusible switch type bus plugs including the clamp and guides, safety interlocks and guide pin. They are available from size 0 through 5 with a circuit breaker, motor circuit protector or fusible disconnect. Contact Eaton for specific application and outline dimensions.

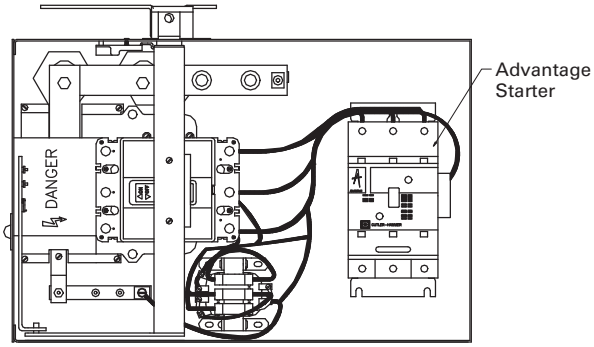

Pow-R-Way III Express Bus

Eaton continues to be a leader in providing service and product solutions to its customers. When you need a complete run of busway fast to get critical electrical loads running or meet time-sensitive deadlines, Express Bus is the solution.

Product Offering

- Indoor plug-in busway:
  - 800–2500 A copper and 800–2000 A aluminum
- Indoor feeder busway:
  - 800–2500 A copper and 800–2000 A aluminum
- Corner joints:
  - Forward (right)
  - Rearward (left)
  - Upward
  - Downward
- Tap boxes:
  - End tap box
  - Plug-in tap box
- Bus plugs:
  - Fusible
  - Circuit breaker
- Accessories:
  - End closer
  - Wall/floor flange
  - Hangers

Program Highlights

Eaton will ship 12 total pieces of busway in 5 working days or 24 total pieces in 10 working days after receipt of released order. Total pieces are inclusive of end tap boxes and corner joints.

For pricing, special requests or needs, please contact your local Eaton sale office.

Plug-in units and additional hangers are stocked and available in the warehouse.

How the Program Works

By using the form provided, it's quick and as easy as 1-2-3.

1. Write in the catalog numbers and quantities of the pieces needed.
2. Write in and extend the pricing. Obtain net multipliers from your local sales office.
3. Fax in the order sheet with a copy of your purchase order.

Once received, your order will be entered in the system and shipped within 5 to 10 working days based upon the number of pieces ordered.

Feeder and plug-in indoor busway with copper conductors are available in 10-feet and 6-feet lengths. They can be used interchangeably without the use of special adapters or special splice plates, provided they are the same current and system rating.

Pow-R-Way III is constructed with a lightweight and rugged, two-piece all-aluminum extruded housing, which is rated as a 50% ground path.

Copper busbars for plug-in applications have full-sized conductor tabs welded to their side edges to form the plug-in contact surfaces. Tabs are the same exact thickness as the conductors and are fully rated up to 800 A.

Corner Joint Elbows

When it comes to bends and turns in a bus run, the Pow-R-Way III corner joint is the most compact elbow in the industry. Given the complexity of today's industrial and commercial distribution systems and the need to coordinate layouts with HVAC, plumbing and lighting requirements, space quickly becomes a critical factor.

The Pow-R-Way III corner joint elbow can be installed in areas where traditional 90-degree elbows could never have been accomplished before.

Due to its compact design, the corner joint also allows for layouts that provide optimum utilization of space. Critical section length that would normally be required for a traditional elbow leg length can now be dedicated to maximizing usable plug-in section length.

The corner joint is as reliable as traditional elbows. It is seismic certified and exceeds the requirements of both the UBC and CBC (Zone 4). The corner joint is UL listed for indoor applications.

Corner Joint Elbows

Fittings and Accessories

End cable tap boxes are available for all ratings in the Express Bus program. One horizontal hanger will be included for every 10 feet of busway. Please specify flatwise or edgewise.

Corner Joint Elbows

Plug-In and Feeder Busway

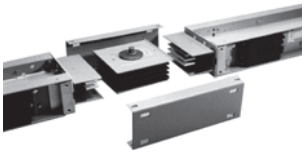

Pow-R-Bridge Assembly

Features, Benefits and Functions

Pow-R-Way* III *Offers a Full Line of Low Voltage Busway to Meet the Needs of the Global Marketplace

Eaton has combined the requirements of NEMA, UL, CSA and IEC into one design to present a world-class product in Pow-R-Way III. With standard features that include a two-piece aluminum housing, finger-safe plug-in outlets, an integral ground path and high 6-cycle short-circuit withstand ratings, Pow-R-Way III provides a busway system that can be used over a broad spectrum of industrial, commercial and institutional applications worldwide.

Product Offering

- **Plug-In Busway**
  225–5000 A copper and 225–4000 A aluminum straight sections of plug-in busway are available in 2 ft (0.6 m) incremental lengths from a 2 ft (0.6 m) minimum to 10 ft (3 m) maximum. Plug-in busway is also available as sprinkler proof
- **Feeder Busway**
  225–5000 A copper and 225–4000 A aluminum straight sections of indoor and outdoor feeder busway available in any length in 1/8-inch (3.2 mm) increments from a 16-inch (406 mm) minimum to a 10-foot (3 m) maximum. A wide range of fittings are available in indoor sprinkler-proof, or outdoor feeder busway
- **Plug-In Units**
  A full family of busway plug-in units is available. Standard plug-in units include fusible or circuit breaker protection. Advanced plug-in units include Visor Series surge suppression, communicating IQ Energy Sentinel and OPTIM circuit breakers, and Advantage combination contactors and starters. A full line of receptacle plug-in units are available

Product Features and Benefits

- The all-aluminum two-piece housing provides durability and product integrity
- The lightweight and compact design results in easy installation
- The housing combined with a true sandwich design in both plug-in and feeder busway contributes to improve coordination and high short-circuit ratings
- An epoxy insulation process ensures optimum conductor and system protection
- Silver-plated joint and contact surfaces provide high-quality connections
- Highly automated manufacturing processes result in a superior product
- The Pow-R-Bridge joint package and torque indicating bolt gives a rugged, yet flexible and easy-to-install connection
- Corner joint elbows contribute to successful layouts and minimize space limitations
- High 6-cycle short-circuit ratings optimize coordination between busway and power equipment
- This world-class product design and manufacturing meets the requirements of NEMA, CSA, Seismic and ISO® and IEEE®
- Plug-in busway design and an enhanced bus plug-in unit facilitates installation and improves safety
- Flexible ground and neutral options provide solutions for any application problem
- A full family of plug-in units is available for every power need
- Advanced bus plugs provide protection, communication and coordination capabilities

Busway Capabilities

- The busway manufacturing plant in Greenwood, SC, is able to meet your emergency or quick ship requirements with quick ship lead-times from 3 days to 2 weeks
- Customer approval drawings can be available in *2 weeks or less* to meet your project requirements
- Eaton's final field fit program ensures accurate layout and allows for minor last-minute modifications during installation
- Advanced system tools including Bid Manager™ programs provide quick and accurate product information

Standards and Certifications

- Pow-R-Way III meets the requirements of NEMA, UL 857, CSA C22.2 No. 27-94, IEEE, ANSI, IEC 439-1 and 2, IEC 529 and is manufactured in an ISO 9001 certified facility
- Pow-R-Way III meets the International Building Code standards and is certified in the Uniform Building Code® and the California Building Code to exceed Zone 4 requirements
- ANSI, NEMA, IEEE, CSA, UL 857
- 10 kAIC rms symmetrical
- Fused duplex—40 A maximum
- Single—70 A maximum
- Quad—125 A maximum

Product Support

Busway product and application support is available from a professional team of Eaton employees that includes field sales engineers, application engineers, engineering service systems and the greenwood busway product engineering services.

Additional Programs

Final Field Fit—This program was established to effectively manage the dimensional uncertainties that are often inherent in bus duct layouts. This program provides the assurance of an exact fit the first time. It allows for bus duct runs to be released for manufacture when certain dimensions are not yet determined. It also eliminates the costly delays that can occur when sections have to be remade in order to accommodate last-minute job site changes in routing. For program details, please see publication SA01702001E.

Field Measurements—For larger and more complex projects, Eaton will provide factory assistance with taking busway layout measurements. We will take full accountability of all measurements and will ensure an exact fit. Contact your local Eaton sales office for pricing and availability.

Additional Information

- Product Brochure: BR01701001E
- Technical Data: TD01701003E
- Consulting Application Guide: CA08104001E
- Electrical Solutions Catalog: CA08105001E
- ABCs of Planning/ Installation: IM01701002E
- Services and Solutions: BR01701002E

Pow-R-Way III

- Technical Data: TD01701003E
- ABCs of Busway: IM01701002E
- Brochure: BR01701001E

Service and Solutions

- Installation and Maintenance: IB01701001E
- Selling Policy: 25-000
- Discount Symbol: CE3-LV Busway CE4-LV Busway Devices

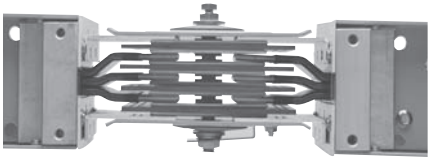

Bridge Joint Assembly

Catalog Number Selection

Breaker Unit

P3B HFD 3 015 G N

Bus Style
- **P3B** = PRWIII
- **IBP** = PRW
- **BP** = Old line

Breaker Frame
(Ex. FD, JDC, KDB)

Three-Pole Only

Trip Rating
(Ex. 015, 060, 150, 400)

Ground Option
- **G** = 50% internal
- **I** = Isolated ground (PRWIII only)

Neutral Option
- **N** = 100% neutral
- **N2** = 200% neutral (PRWIII only)
- **ZN** = Low Z (old line only)

Fusible Unit

P3F 3 6 4 R G N H

Bus Style
- **P3F** = PRWIII
- **ITAP** = PRW
- **TAP** = Old line

Three-Pole Only

Voltage
- **6** = 600 V
- **2** = 240 V

Amps
- **1** = 30
- **2** = 60
- **3** = 100
- **4** = 200
- **5** = 400
- **6** = 600
- **7** = 800

Fuse Clips
H, J, or R ≤ 600 A
T or L for 800 A

Ground Option
- **G** = 50%
- **I** = Isolated (PRWIII only)

Neutral Option
- **N** = 100% neutral
- **N2** = 200% neutral (PRWIII only)
- **ZN** = Low Z (old line only)

Mounting Options for P3F (30–200 A Only)
- **H** = Horizontal
- **V** = Vertical

SPD Series Bus Plug

P3BSPD 250 480Y 2 C

Fixed—do not change

Surge Rating (kA/Phase)

50	200
80	250
100	300
120	400
160	

Voltage Code
- **208Y** = 208Y/120 V (4W + G)
- **400Y** = 400Y/230 V (4W + G)
- **480Y** = 480Y/277 V (4W + G)
- **600Y** = 600Y/347 V (4W + G)
- **240D** = 240 Delta (3W + G)
- **480D** = 240 Delta (3W + G)
- **600D** = 240 Delta (4W + G)

Option Code
- **1** = Basic—Dual-colored LED per phase to indicate protection status of the N-G mode on units with a neutral wire, single-colored LED to indicate the lack of a neutral wire connection on systems with a neutral wire.
- **2** = Standard—Dual-colored LED per phase to indicate protection status of the N-G mode on units with a neutral wire, single-colored LED to indicate the lack of a neutral wire connection on systems with a neutral wire, audible alarm with silence button and Form C relay contact.
- **3** = Standard + Surge Counter—Dual-colored LED per phase to indicate protection status of the N-G mode on units with a neutral wire, single-colored LED to indicate the lack of a neutral wire connection on systems with a neutral wire, audible alarm with silence button, Form C relay contact, EMI/RFI filtering providing up to 50 dB of noise attenuation from 10 kHz to 100 MHz and surge counter with reset button.

Fixed—do not change

NEMA Receptacle Configuration

L 5 15 R

Blade
- **Blank** = Straight blade
- **L** = Locking blade

Voltage

1 = 125 V, two-pole, two-wire	**11** = 250 V, three-pole, three-wire
2 = 250 V, two-pole, two-wire	**14** = 25/250 V, three-pole, four-wire
5 = 125 V, two-pole, three-wire	**15** = 250 V, three-pole, four-wire
6 = 250 V, two-pole, three-wire	**18** = 120/208 V, four-pole, four-wire
10 = 125/25 V, three-pole, three-wire	**21** = 120/208 V, four-pole, five-wire

Amps

15	40
20	50
30	60

Receptacle Type
- **R** = Receptacle
- **C** = Cord receptacle

Notes

"H" clips are standard for PRW and old line unless specified by adding "R" in catalog number.

Please call Greenwood low voltage busway department for help in assigning a catalog number for a specific application.

Do not leave spaces between characters. Example: P3BFD3100N; ITAP361N.

All plug-in units come fully assembled.

Product Selection

Circuit Breaker Plug-In Units

Horizontal Install (Front View)

Horizontal Install (Rear View)

Circuit Breaker Plug-In Units

Breaker Frame	Ampere Rating	Plug-In Enclosure Catalog Number ①	100% Neutral Stab Catalog Number	50% Internal Ground Stab Catalog Number	50% Isolated Ground Stab Catalog Number	200% Neutral Stab Catalog Number
ED, EDH, EHD, EDC, FDB, FD, HFD, FDC	10–225	**P3BFD**	**P3FDN100**	**P3FG100**	**P3FDI100**	**P3FD2N100**
			P3FDN225	—	**P3FDI225**	**P3FD2N225**
JDB, JD, HJD, JDC	70–250	**P3BJD**	**P3JDN150**	—	**P3JDI150**	**P3JD2N150**
			P3JDN250	**P3JDG250**	**P3JDI250**	**P3JD2N250**
KDB, KD, DK, HKD, KDC	100–400	**P3BKD**	**P3KDN400**	**P3KDG400**	**P3KDI400**	**P3KD2N400**
LDB, LD, HLD, LDC	300–600	**P3BLD**	**P3MDN800**	**P3MDG800**	**P3MDI800**	—
MDL, HMDL	400–800	**P3BMD**	**P3MDN800**	**P3MDG800**	**P3MDI800**	—
ND, HND, NDC	400–800	**P3BND**	**P3NDN800**	**P3NDG800**	**P3NDI800**	—
FB TRI-PAC	15–100	**P3BFBP**	**P3FBPN100**	**P3FBPG100**	**P3BFBPI100**	—
LA TRI-PAC	75–400	**P3BLAP**	**P3LAPN400**	**P3LAPG400**	**P3LAPI400**	—
NB TRI-PAC	500–800	**P3BNBP**	**P3NBPN800**	**P3NBPG800**	**P3BNBPI800**	—

- Refer to **Page V2-T6-22** for breaker data; for reference only
- The enclosure, circuit breaker, neutral and ground are ordered and shipped assembled
- Housing ground connection supplied as standard at no additional charge

Circuit Breaker Plug

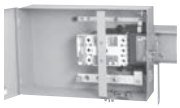

Advanced Circuit Breaker Plug-Ins

Digitrip OPTIM	Ampere Rating	Plug-In Enclosure Catalog Number	100% Neutral Catalog Number	50% Internal Ground Catalog Number	50% Isolated Ground Catalog Number
L-Frame	70–600	**P3BORPL**	**P3BORPLN600**	**P3BORPLG600**	**P3BORPLI600**

- The P3BFD, P3BJD and P3BKD plug-in units can be modified to accept breaker mounted IQ Energy Sentinels
- The IQ Energy Sentinel and the OPTIM breaker plug-in units permit multiple meters, remote monitoring, and interconnection with programmable logic controllers and building-management systems. Applications may range from revenue metering for tenant billing to a full-power management system. Consult with an Eaton application engineer or the busway product line for assistance

Notes

① Enclosure not sold separately. Refer to **Page V2-T6-14** for assembled bus plug catalog number.
See **Page V2-T6-14** for plug assembled style number configuration.

Fusible Plug-In Units

Pow-R-Way III Plug-In Opening

Fusible Plug-In Units

Ampere Rating	Three-Wire Plug 600 V Catalog Number ①	Three-Wire Plug 240 V Catalog Number ①	100% Neutral Stab Catalog Number	50% Internal Ground Stab Catalog Number	50% Isolated Ground Stab Catalog Number	200% Neutral Stab Catalog Number
30 (Horizontal)	**P3F361RGH**	**P3F321RGH**	②	②	②	②
30 (Vertical)	**P3F361RGV**	**P3F321RGV**	②	②	②	②
60 (Horizontal)	**P3F362RGH**	**P3F322RGH**	②	②	②	②
60 (Vertical)	**P3F362RGV**	**P3F322RGV**	②	②	②	②
100 (Horizontal)	**P3F363RGH**	**P3F323RGH**	②	②	②	②
100 (Vertical)	**P3F363RGV**	**P3F323RGV**	②	②	②	②
200 (Horizontal)	**P3F364RGH**	**P3F324RGH**	②	②	②	②
200 (Vertical)	**P3F364RGV**	**P3F324RGV**	②	②	②	②
400	**P3F365R**	**P3F325R**	**P3FN400**	**P3FG400**	**P3FI400**	—
600	**P3F366R**	**P3F326R**	**P3FN600**	**P3FG800**	**P3FI800**	—
800	**P3F367T**	**P3F327T**	**P3FN800**	**P3FG800**	**P3FI800**	—

- Fuses are not included
- Mechanical lugs are provided. Compression lugs are available for fusible plug-in units rated at 400 A and above. If compression lugs are required, the cable size must be specified
- Plug-in unit, neutral and ground are ordered and shipped assembled

Note: See **Page V2-T6-14** for plug assembled style number configuration.

- Housing ground connection supplied as standard at no additional charge
- R-Fuse clips are supplied as standard
- If J-Fuse clips are required, replace "R" in the catalog number with a "J" (30–600 A, 600 V only)
- 800 A, 600 V also available with L-Fuse clips; replace "T" in the catalog number with "L

Pow-R-Way III Plug (Rear View)

Special Industry Fusible Plug-In Units

Ampere Rating	Enclosure 600 V Catalog Number	100% Neutral Stab Catalog Number	50% Internal Ground Stab Catalog Number	50% Isolated Ground Stab Catalog Number	Terminal Kit Compression Lugs: Number Per Phase	Terminal Kit Compression Lugs: Wire Size	Terminal Kit Compression Lugs: Catalog Number
30	**P3F361H**	③	③	③	1	1–#12 to #10	**CTK30SC**
60	**P3F362H**	③	③	③	1	1–#8	**CTK60SC**
100	**P3F363H**	③	③	③	1	1–#4	**CTK100SC**
200	**P3F364H**	③	③	③	1	1–2/0	**CTK200BSC**
400	**P3F365H**	③	③	③	1	1–750 kcmil	**CTK400SPW**
600	**P3F366H**	③	③	③	2	2–500 kcmil	**CTK600DPM**

- Fuses are not included
- Housing ground connection supplied as standard at no additional charge
- Grounding compression lug included on 200 A and above. Lugs are ordered and shipped separately; fuses are not included
- H-Fuse clips are supplied as standard
- If J- or R-Fuse clips are required, order by description

Notes

① "H" and "V" do not denote mounting orientation of the bus plug. Horizontal (H) and Vertical (V) refer to the orientation of the bus system that the plug will be installed on.

② Neutral and ground kits are not capable of being field installed in these units. Order bus plugs with fully assembled part numbers. See Catalog Number Selection on **Page V2-T6-14** for details.

③ Grounds and neutrals must be factory assembled. Order by description. See **Page V2-T6-22.**

Special Plug-In Units

Plug-In Cable Tap Box Units

Ampere Rating	Plug-in Cable Tap Box 600 V Enclosure Catalog Number	100% Neutral Stab Catalog Number	50% Internal Ground Stab Catalog Number	50% Isolated Ground Stab Catalog Number
200	**P3PTB200**	**P3PTBN200**	**P3PTBG200**	**P3PTBI200**
400	**P3PTB400**	**P3PTBN400**	**P3PTBG400**	**P3PTBI400**
600	**P3PTB600**	**P3PTBN600**	**P3PTBG600**	**P3PTBI600**
800	**P3PTB800**	**P3PTBN800**	**P3PTBG800**	**P3PTBI800**

- Mechanical lugs are provided. If compression lugs are required, the cable size must be specified

Plug-In Combination Starters and Contactors (Non-Reversing, Three-Pole)

NEMA Size	Freedom Starter		Freedom Contact		Advantage Starter		Advantage Contact	
	Fusible	Circuit Breaker	Fusible	Circuit Breaker	Fusible	Circuit Breaker	Fusible	Circuit Breaker
0	**P3FSTR0F**	**P3BSTR0F**	**P3FCON0F**	**P3BCON0F**	**P3FSTR0A**	**P3BSTR0A**	**P3FCON0A**	**P3BCON0A**
1	**P3FSTR1F**	**P3BSTR1F**	**P3FCON1F**	**P3BCON1F**	**P3FSTR1A**	**P3BSTR1A**	**P3FCON1A**	**P3BCON1A**
2	**P3FSTR2F**	**P3BSTR2F**	**P3FCON2F**	**P3BCON2F**	**P3FSTR2A**	**P3BSTR2A**	**P3FCON2A**	**P3BCON2A**
3	**P3FSTR3F**	**P3BSTR3F**	**P3FCON3F**	**P3BCON3F**	**P3FSTR3A**	**P3BSTR3A**	**P3FCON3A**	**P3BCON3A**
4	**P3FSTR4F**	**P3BSTR4F**	**P3FCON4F**	**P3BCON4F**	**P3FSTR4A**	**P3BSTR4A**	**P3FCON4A**	**P3BCON4A**

Bolt-On Units

Circuit Breaker Bolt-On Units

Breaker Frame	Ampere Rating	Bolt-On Enclosure Catalog Number	100% Neutral Stab Catalog Number	50% Internal Ground Stab Catalog Number	50% Isolated Ground Stab Catalog Number
EHD, FDB, FD, HFD, FDC	15–225	**P3BFDBO**	**P3FDNBO**	**P3FDGBO**	**P3FDIBO**
JDB, JD, HJD, JDC	70–250	**P3BJDBO**	**P3FJDNBO**	**P3JDGBO**	**P3JDIBO**
KDB, KD, HKD, KDC	250–400	**P3BKDBO**	**P3KDNBO**	**P3KDGBO**	**P3KDIBO**
LDB, LD, HLD, LDC	300–600	**P3BLDBO**	**P3LDNBO**	**P3LDGBO**	**P3LDIBO**
MDL, HMDL	500–800	**P3BMDBO**	**P3MDNBO**	**P3MDGBO**	**P3MDIBO**
ND, HND	900–1200	**P3BNDBO**	**P3NDNBO**	**P3NDGBO**	**P3NDIBO**

- Factory assembled, refer to Eaton's busway for delivery
- Refer to **Page V2-T6-22** for breaker data, for reference only
- Bolt-on units **require a Power Take-off** at the rating of the busway
- Housing ground connection supplied as standard

Fusible Bolt-On Units

Ampere Rating	Enclosure 600 V Catalog Number	100% Neutral Stab Catalog Number	50% Internal Ground Stab Catalog Number	50% Isolated Ground Stab Catalog Number
30	**P3F361BO**	**P3FN100BO**	**P3FG100BO**	**P3FI100BO**
60	**P3F362BO**	**P3FN100BO**	**P3FG100BO**	**P3FI100BO**
100	**P3F363BO**	**P3FN100BO**	**P3FG100BO**	**P3FI100BO**
200	**P3F364BO**	**P3FN250BO**	**P3FG250BO**	**P3FI250BO**
400	**P3F365BO**	**P3FN400BO**	**P3FG400BO**	**P3FI400BO**
600	**P3F366BO**	**P3FN600BO**	**P3FG600BO**	**P3FI600BO**
800	**P3F367BO**	**P3FN800BO**	**P3FG800BO**	**P3FI800BO**
1200	**P3F369BO**	**P3FN1200BO**	**P3FG1200BO**	**P3FI1200BO**

- Factory assembled; refer to Eaton's busway for delivery
- Bolt-on units **require a power take-off** at the rating of the busway
- If neutral and ground are required, order by description with bolt-on unit
- Housing ground connection supplied as standard

Ground Detector Neutralizer Plug (Three-Wire)

Maximum Voltage	Catalog Number
600	**P3GND**

Technical Data and Specifications

Ratings

A. The busway shall be Eaton's type Pow-R-Way III: [three-phase, three-wire] [three-phase, three-wire with 50% housing ground and/or 50% internal ground] [three-phase, three-wire with 50% housing ground and/or 50% isolated ground] three-phase, four-wire with 100% neutral] [three-phase, four-wire with 100% neutral, 50% housing and/or 50% internal ground] [three-phase, four-wire with 100% neutral, 50% housing and/or 50% isolated ground] [three-phase, four-wire with 200% neutral] [three-phase, four-wire with 200% neutral, 50% housing ground, and/or 50% internal ground] [three-phase, four-wire with 200% neutral, 50% housing ground, and/or 50% isolated ground] with voltage and current ratings as indicated on the contract drawings.

B. The busway shall have a minimum of 6-cycle short-circuit rating of 85 kA rms symmetrical for ratings through 800 A, 100 kA rms symmetrical for ratings through 1350 A, 125 kA rms symmetrical for ratings through 1600 A, 150 kA rms symmetrical for ratings through 2500 A, and 200 kA rms symmetrical for ratings through 5000 A.

Construction

A. The busway and associated fittings shall consist of [aluminum] [copper] conductors totally enclosed in a two-piece extruded aluminum housing. Outdoor feeder, indoor feeder and indoor plug-in busway shall be interchangeable at the same rating without the use of adapters or special splice plates. Fittings—such as elbows, tees, flanges, etc.—shall be identical for use with both the plug-in and feeder types of busway. The busway shall be capable of being mounted flatwise, edgewise or vertically without derating. The busway shall consist of standard 10 ft (3 m) sections with special sections and fittings provided to suit the installation. Horizontal runs shall be suitable for hanging on 10 ft (3 m) maximum centers. Vertical runs shall be suitable for mounting on 16 ft (4 m) maximum centers. Provide one hanger for every 10 ft (3 m) of horizontally mounted duct. On vertical runs, provide one adjustable hanger per floor.

Bus

A. Busbars shall be fabricated from high strength, [57% conductivity aluminum] [99% conductivity copper] and suitably plated at all electrical contact surfaces.

B. Busbars shall be insulated over their entire length, except at joints and contact surfaces, with a UL-listed insulating material consisting of epoxy applied by fluidized bed process. Tape or heat-shrink sleeve insulation, or any other method of insulation that can allow air gaps or insulation breakdown, shall not be acceptable.

C. The busway shall be capable of carrying rated current continuously without exceeding a temperature rise of 55 °C based on a 40 °C ambient.

Bus Joints

A. Each busway section shall be furnished complete with joint hardware and covers. The busway joints shall be a single-bolt, non-rotating, removable bridge design. All bridge joints shall be furnished with torque-indicating double-head joint bolts and Belleville washers. The bridge joint shall utilize a captive nut retainer on the opposite side of the torque indicating bolt. The bridge joint design shall ensure proper installation without the use of a torque wrench, and provide visual indication that the joint is properly torqued. Each busway joint shall allow for a minimum length adjustment of ±0.5 inches (12.7 mm). De-energization of busway shall not be required for safe testing of joint tightness.

Housing

A. The busway housing shall be a two-piece design fabricated from extruded aluminum. The two-piece housing shall be bolted together along the bottom flange. The busway enclosure finish shall be ANSI 61 gray baked epoxy powder paint applied by an electrostatic process.

B. Outdoor feeder busway housing shall be identical to indoor feeder busway housings, and shall be UL listed for outdoor use.

Plug-In Busway

A. Where required, busway shall be of the plug-in type. Plug-in busway shall be available in standard 2-, 4-, 6-, 8- and 10-foot lengths, with plug-in openings provided on both sides of the busway sections on 2 ft (0.6 m) centers. Plug-in covers shall prevent dirt and debris from entering contact plug-in openings in the busway. The design shall allow for 10 hinged cover outlets per 10 ft (3 m) of plug-in length. Covers for plug-in openings shall have a positive screw close feature and provisions for the installation of power company seals. The contact surfaces for bus plug stabs shall be silver-plated of the same material, thickness and rating as the stab bars. The stabs shall be welded to the busbars. A standard housing ground connection shall be supplied in each plug-in opening. Positive mechanical guides for plug-in units shall be provided at each plug-in opening to facilitate unit alignment and prevent improper installation.

B. Where required, plug-in units of the types and ratings indicated on the plans and specifications shall be supplied. Plug-in units shall be mechanically interlocked with the busway housing to prevent their installation or removal when the switch is in the ON position. The enclosure of any plug-in unit shall make positive ground connection to the duct housing before the stabs make contact with the busbars. All plug-in units shall be equipped with a defeatable interlock to prevent the cover from being opened while the switch is in the ON position and prevent accidental closing of the switch while the cover is open. The plugs shall be provided with a means for padlocking the cover closed and padlocking the disconnect device in the OFF position. The operating handle and mechanism shall remain in control of the disconnect device at all times, permitting its easy operation from the floor by means of a hookstick or chain. For safety reasons, no projections shall extend into the busway housing other than the plug-in stabs. All plug-in units shall be interchangeable without alteration or moderation of plug-in duct.

C. Fusible-type plugs shall have a quick-make/quick-break disconnect switch and positive pressure fuse clips.

—OR—

C. Circuit-breaker-type plugs shall have an interrupting rating of not less than symmetrical rms amperes or be series rated as otherwise shown in the contract document and shall meet all requirements of UL Standard 489. It shall be possible to increase the interrupting rating of a breaker plug-in device having ampere ratings through 400 A up to 100 kAIC at 480 Vac and 200 kAIC at 240 Vac by changing out the circuit breaker only and leaving the enclosure intact. All breaker plug-in devices shall be Eaton type Series C.

Surge Protective Device

A. Provide surge protective device as specified in Section 16671.

Short-Circuit Withstand Ratings—rms Symmetrical Amperes for Copper Pow-R-Way III Plug-In and Feeder Busway

Ampere Rating	6-Cycle Copper
225	85,000
400	85,000
600	85,000
800	85,000
1000	100,000
1200	100,000
1350	100,000
1600	125,000
2000	150,000
2500	150,000
3200	200,000
4000	200,000
5000	200,000

Short-Circuit Withstand Ratings—rms Symmetrical Amperes for Aluminum Pow-R-Way III Plug-In and Feeder Busway

Ampere Rating	6-Cycle Aluminum
225	85,000
400	85,000
600	85,000
800	100,000
1000	100,000
1200	125,000
1350	150,000
1600	150,000
2000	150,000
2500	200,000
3200	200,000
4000	200,000
5000	—

Pow-R-Way* III *Plug-In Busway

- 225–5000 A copper
- 225–4000 A aluminum

Straight sections of plug-in busway are made only in 24-inch (609.6 mm) incremental lengths with a maximum length of 10 ft (3 m). **Page V2-T6-25** depicts the configuration of plug-in busway and Pow-R-Bridge for the available ampere ratings. See table below for reference to the proper configuration. Available in indoor and sprinkler-proof ratings.

Configuration

Ampere Rating UL 857 Cu	Ampere Rating UL 857 Al	Ampere Rating IEC 439 Cu	Configuration (see Page V2-T6-25)
225	225	225	A
400	400	400	A
600	630	630	A
800	800	1000	A
1000	1000	1200	A
1200	1200	1400	A
1350	1350	1550	A
1600	—	1800	A
2000	—	2250	A
—	1600	—	B
2500	2000	3000	B
3200	—	3800	C
4000	2500	4500	C
—	3200	—	D
5000	4000	5800	D

IEC 60529 IP Ratings

IEC 529 IP Rating	Busway Type
IP2X	Pow-R-Way III plug-in busway; plug-in outlet protects against access to live parts
IP40	Pow-R-Way III indoor plug-in and feeder busway
IP55	Pow-R-Way III sprinkler-proof plug-in busway
IP66	Pow-R-Way III outdoor feeder busway

IEC 60529 Degrees of Protection

IEC 529 IP Rating	Description
IP40	Protection against access to hazardous parts with a wire or solid foreign object 1 mm diameter. No protection against water.
IP55	Protection against access to hazardous parts with a wire and dust shall not penetrate in quantity to interfere with satisfactory operation or impair safety. Protects against water jets.
IP66	Protection against access to hazardous parts with a wire and dust shall not penetrate in quantity to interfere with satisfactory operation or impair safety. Protects against powerful water jets.

Pow-R-Way* III *Feeder Busway

- 225–5000 A copper
- 225–4000 A aluminum

Straight sections of feeder busway can be supplied in any length, at 1/8-inch (3.2 mm) increments, from a 16-inch (406.4 mm) minimum to a 10 ft (3 m) maximum. **Page V2-T6-25** illustrates the configuration of feeder busway and Pow-R-Bridge for the available ampere ratings. See table below for reference to the proper configuration.

Feeder Busway Configuration

Ampere Rating UL 857 Cu	Ampere Rating UL 857 Al	Ampere Rating IEC 439 Cu	Configuration (see Page V2-T6-25)
225	225	225	A
400	400	400	A
600	600	630	A
800	800	1000	A
1000	1000	1200	A
1200	1200	1400	A
1350	1350	1550	A
1600	—	1800	A
2000	—	2250	A
—	1600	—	B
2500	2000	3000	B
3200	—	3800	C
4000	2500	4500	C
—	3200	—	D
5000	4000	5800	D

Each section will include one factory-installed Pow-R-Bridge mounted to the left end of the busway (with the "T" to the top, when viewing the bus from the "F" side). Each Pow-R-Bridge will have a "T" label, which must always match the "T" orientation of the busway. Available in indoor, sprinkler-proof and outdoor ratings. See IEC 60529 IP Ratings table to the left for details.

Circuit Breaker Plug-In Units

Circuit Breakers

100% rated breakers are not available for use in bus plugs. Contact product line for guidance.

Ampere Rating	Interrupting Rating (kA Symmetrical) 240 Vac	480 Vac	600 Vac	Breaker Type
15–60	18	14	—	EHD
70–100	18	14	—	EHD
15–60	18	14	14	FDB
70–100	18	14	14	FDB
110–150	18	14	14	FDB
15–60	65	35	18	FD
70–100	65	35	18	FD
110–150	65	35	18	FD
175–225	65	35	18	FD
15–60	100	65	25	HFD
70–100	100	65	25	HFD
110–150	100	65	25	HFD
175–225	100	65	25	HFD
15–60	200	100	35	FDC
70–100	200	100	35	FDC
110–225	200	100	35	FDC
15–100	200	150	—	FCL
100–225	65	—	—	ED
100–225	100	—	—	EDH
100–225	200	—	—	EDC
70–225	65	35	18	JD, JDB
250	65	35	18	JD, JDB
70–225	100	65	25	HJD
250	100	65	25	HJD
70–225	200	100	35	JDC
250	200	100	35	JDC
125–250	200	200	100	LCL
250–400	65	—	—	DK
100–400	65	35	25	KD, KDB
100–400	100	65	35	HKD
100–400	200	100	65	KDC
200–400	200	200	—	LCL
300–600	65	35	25	LD, LDB
300–600	100	65	35	HLD
300–600	200	100	50	LDC
400–800	65	50	25	MDL
400–800	100	65	35	HMDL
400–800	65	50	25	ND
400–800	100	65	35	HND
400–800	200	100	50	NDC
600–1200	65	50	25	ND
600–1200	100	65	35	HND
600–1200	200	100	50	NDC

Branch Devices Earth Leakage Ground Fault Circuit Breakers

(Adjustable pickup from 30 mA to 30 A)

Ampere Rating	kAIC (Symmetrical) 480 Vac	Breaker Type
35–60	25	ELFD
70–100	25	ELFD
110–150	25	ELFD
35–60	65	ELHFD
70–100	65	ELHFD
110–150	65	ELHFD
35–60	100	ELFDC
70–100	100	ELFDC
110–150	100	ELFDC
100–250	35	ELJD
100–250	65	ELHJD
100–250	100	ELJDC
200–400	35	ELKD
200–400	65	ELHKD
200–400	100	ELKDC

Integrally Fused, Current-Limiting Circuit Breaker

Ampere Rating	Interrupting Rating (kA Symmetrical) 240 Vac	480 Vac	600 Vac	Breaker Type
15–100	200	200	200	FB-P
125–225	200	200	200	LA-P
250–400	200	200	200	LA-P
400–600	200	200	200	NB-P
700–800	200	200	200	NB-P

Fusible Switch Horsepower Ratings

Ampere Rating	240 V NEC Std.	Max.	480 V NEC Std.	Max.	600 V NEC Std.	Max.
30	3	7.5	5	15	7.5	20
60	7.5	15	15	30	15	50
100	15	30	25	60	30	75
200	25	60	50	125	60	150
400	50	125	100	250	125	350
600	75	200	150	400	200	500
800	100	250	200	500	250	500

Dimensions

Approximate Dimensions in Inches (mm)

Busbar and Housing

Three-Wire with No Neutral

Ampere Rating		Phase Bar Size		Bar Per	Wire Designation and Housing Size 50% Integral Housing Ground 3WH		50% Internal Ground Bus 3WHG		50% Internal Isolated Ground 3WI		
Cu	Al	Depth	Width	Phase	Width	Height	Width	Height	Width	Height	Figure ①
225	225	0.25 (6.4)	1.62 (41.1)	1	4.75 (120.7)	4.38 (111.3)	4.75 (120.7)	4.50 (114.3)	4.75 (120.7)	4.55 (115.6)	A
400	400	0.25 (6.4)	1.62 (41.1)	1	4.75 (120.7)	4.38 (111.3)	4.75 (120.7)	4.50 (114.3)	4.75 (120.7)	4.55 (115.6)	A
600	—	0.25 (6.4)	1.62 (41.1)	1	4.75 (120.7)	4.38 (111.3)	4.75 (120.7)	4.50 (114.3)	4.75 (120.7)	4.55 (115.6)	A
800	600	0.25 (6.4)	1.62 (41.1)	1	4.75 (120.7)	4.38 (111.3)	4.75 (120.7)	4.50 (114.3)	4.75 (120.7)	4.55 (115.6)	A
1000	—	0.25 (6.4)	2.25 (57.2)	1	5.38 (136.7)	4.38 (111.3)	5.38 (136.7)	4.50 (114.3)	5.38 (136.7)	4.55 (115.6)	A
1200	800	0.25 (6.4)	2.75 (70.0)	1	5.88 (149.4)	4.38 (111.3)	5.88 (149.4)	4.50 (114.3)	5.88 (149.4)	4.55 (115.6)	A
1350	1000	0.25 (6.4)	3.25 (82.3)	1	6.38 (162.10)	4.38 (111.3)	6.38 (162.1)	4.50 (114.3)	6.38 (162.10)	4.55 (115.6)	A
1600	1200	0.25 (6.4)	4.25 (108.0)	1	7.38 (187.5)	4.38 (111.3)	7.38 (187.5)	4.50 (114.3)	7.38 (187.5)	4.55 (115.6)	A
2000	1350	0.25 (6.4)	5.50 (139.7)	1	8.64 (219.5)	4.38 (111.3)	8.64 (219.5)	4.50 (114.3)	8.64 (219.5)	4.55 (115.6)	A
—	1600	0.25 (6.4)	6.25 (158.8)	1	9.40 (238.8)	4.38 (111.3)	9.40 (238.8)	4.50 (114.3)	9.40 (238.8)	4.55 (115.6)	A
2500	2000	0.25 (6.4)	8.00 (203.2)	1	11.17 (283.7)	4.38 (111.3)	11.17 (283.7)	4.50 (114.3)	11.17 (283.7)	4.55 (115.6)	A
3200	—	0.25 (6.4)	4.25 (108.0)	2	16.14 (410.0)	4.38 (111.3)	16.14 (410.0)	4.50 (114.3)	16.14 (410.0)	4.55 (115.6)	B
4000	2500	0.25 (6.4)	5.50 (139.7)	2	18.64 (473.5)	4.38 (111.3)	18.64 (473.5)	4.50 (114.3)	18.64 (473.5)	4.55 (115.6)	B
—	3200	0.25 (6.4)	6.25 (158.8)	2	20.16 (512.0)	4.38 (111.3)	20.16 (512.0)	4.50 (114.3)	20.16 (512.0)	4.55 (115.6)	B
5000	4000	0.25 (6.4)	8.00 (203.2)	2	23.70 (602.0)	4.38 (111.3)	23.70 (602.0)	4.50 (114.3)	23.70 (602.0)	4.55 (115.6)	B

Four-Wire with 100% Neutral

Ampere Rating		Phase and Neutral Bar Size		Bar Per	Wire Designation and Housing Size 50% Integral Housing Ground 4WH		50% Internal Ground 4WHG		50% Internal Isolated Ground 4WI		
Cu	Al	Depth	Width	Phase	Width	Height	Width	Height	Width	Height	Figure ①
225	225	0.25 (6.4)	1.62 (41.1)	1	4.75 (120.7)	4.38 (111.3)	4.75 (120.7)	4.50 (114.3)	4.75 (120.7)	4.55 (115.6)	A
400	400	0.25 (6.4)	1.62 (41.1)	1	4.75 (120.7)	4.38 (111.3)	4.75 (120.7)	4.50 (114.3)	4.75 (120.7)	4.55 (115.6)	A
600	—	0.25 (6.4)	1.62 (41.1)	1	4.75 (120.7)	4.38 (111.3)	4.75 (120.7)	4.50 (114.3)	4.75 (120.7)	4.55 (115.6)	A
800	600	0.25 (6.4)	1.62 (41.1)	1	4.75 (120.7)	4.38 (111.3)	4.75 (120.7)	4.50 (114.3)	4.75 (120.7)	4.55 (115.6)	A
1000	—	0.25 (6.4)	2.25 (57.2)	1	5.38 (111.3)	4.38 (111.3)	5.38 (111.3)	4.50 (114.3)	5.38 (111.3)	4.55 (115.6)	A
1200	800	0.25 (6.4)	2.75 (70.0)	1	5.88 (149.4)	4.38 (111.3)	5.88 (149.4)	4.50 (114.3)	5.88 (149.4)	4.55 (115.6)	A
1350	1000	0.25 (6.4)	3.25 (82.3)	1	6.38 (162.1)	4.38 (111.3)	6.38 (162.1)	4.50 (114.3)	6.38 (162.1)	4.55 (115.6)	A
1600	1200	0.25 (6.4)	4.25 (108.0)	1	7.38 (187.5)	4.38 (111.3)	7.38 (187.5)	4.50 (114.3)	7.38 (187.5)	4.55 (115.6)	A
2000	1350	0.25 (6.4)	5.50 (139.7)	1	8.64 (219.5)	4.38 (111.3)	8.64 (219.5)	4.50 (114.3)	8.64 (219.5)	4.55 (115.6)	A
—	1600	0.25 (6.4)	6.25 (158.8)	1	9.40 (238.8)	4.38 (111.3)	9.40 (238.8)	4.50 (114.3)	9.40 (238.8)	4.55 (115.6)	A
2500	2000	0.25 (6.4)	8.00 (203.2)	1	11.17 (283.7)	4.38 (111.3)	11.17 (283.7)	4.50 (114.3)	11.17 (283.7)	4.55 (115.6)	A
3200	—	0.25 (6.4)	4.25 (108.0)	2	16.14 (410.0)	4.38 (111.3)	16.14 (410.0)	4.50 (114.3)	16.14 (410.0)	4.55 (115.6)	B
4000	2500	0.25 (6.4)	5.50 (139.7)	2	18.64 (473.5)	4.38 (111.3)	18.64 (473.5)	4.50 (114.3)	18.64 (473.5)	4.55 (115.6)	B
—	3200	0.25 (6.4)	6.25 (158.8)	2	20.16 (512.0)	4.38 (111.3)	20.16 (512.0)	4.50 (114.3)	20.16 (512.0)	4.55 (115.6)	B
5000	4000	0.25 (6.4)	8.00 (203.2)	2	23.70 (602.0)	4.38 (111.3)	23.70 (602.0)	4.50 (114.3)	23.70 (602.0)	4.55 (115.6)	B

Note

① Refer to drawing on **Page V2-T6-24**.

Approximate Dimensions in Inches (mm)

Four-Wire with 200% Neutral

Ampere Rating		Phase Bar Size Neutral Bar is 0.5 (12.7) x Width Shown		Bar Per	Wire Designation and Housing Size						
					50% Integral Housing Ground 4WNH		50% Internal Ground Bus 4WNG		50% Internal Isolated Ground 4WNI		
Cu	Al	Depth	Width	Phase	Width	Height	Width	Height	Width	Height	Figure
225	225	0.25 (6.4)	1.62 (41.1)	1	4.75 (120.7)	4.92 (125.0)	4.75 (120.7)	5.05 (128.3)	4.75 (120.7)	5.10 (129.5)	A
400	400	0.25 (6.4)	1.62 (41.1)	1	4.75 (120.7)	4.92 (125.0)	4.75 (120.7)	5.05 (128.3)	4.75 (120.7)	5.10 (129.5)	A
600	—	0.25 (6.4)	1.62 (41.1)	1	4.75 (120.7)	4.92 (125.0)	4.75 (120.7)	5.05 (128.3)	4.75 (120.7)	5.10 (129.5)	A
800	600	0.25 (6.4)	1.62 (41.1)	1	4.75 (120.7)	4.92 (125.0)	4.75 (120.7)	5.05 (128.3)	4.75 (120.7)	5.10 (129.5)	A
1000	—	0.25 (6.4)	20.25 (57.2)	1	5.38 (136.7)	4.92 (125.0)	5.38 (136.7)	5.05 (128.3)	5.38 (136.7)	5.10 (129.5)	A
1200	800	0.25 (6.4)	2.75 (70.0)	1	5.88 (149.4)	4.92 (125.0)	5.88 (149.4)	5.05 (128.3)	5.88 (149.4)	5.10 (129.5)	A
1350	1000	0.25 (6.4)	30.25 (82.3)	1	6.38 (162.1)	4.92 (125.0)	6.38 (162.1)	5.05 (128.3)	6.38 (162.1)	5.10 (129.5)	A
1600	1200	0.25 (6.4)	40.25 (108.0)	1	7.38 (187.5)	4.92 (125.0)	7.38 (187.5)	5.05 (128.3)	7.38 (187.5)	5.10 (129.5)	A
2000	1350	0.25 (6.4)	5.50 (139.7)	1	8.64 (219.5)	4.92 (125.0)	8.64 (219.5)	5.05 (128.3)	8.64 (219.5)	5.10 (129.5)	A
—	1600	0.25 (6.4)	60.25 (158.8)	1	9.40 (238.8)	4.92 (125.0)	9.40 (238.8)	5.05 (128.3)	9.40 (238.8)	5.10 (129.5)	A
2500	2000	0.25 (6.4)	8.00 (203.2)	1	11.17 (283.7)	4.92 (125.0)	11.17 (283.7)	5.05 (128.3)	11.17 (283.7)	5.10 (129.5)	A
3200	—	0.25 (6.4)	40.25 (108.0)	2	16.14 (410.0)	4.92 (125.0)	16.14 (410.0)	5.05 (128.3)	16.14 (410.0)	5.10 (129.5)	B
4000	2500	0.25 (6.4)	5.50 (139.7)	2	18.64 (473.5)	4.92 (125.0)	18.64 (473.5)	5.05 (128.3)	18.64 (473.5)	5.10 (129.5)	B
—	3200	0.25 (6.4)	60.25 (158.8)	2	20.16 (512.0)	4.92 (125.0)	20.16 (512.0)	5.05 (128.3)	20.16 (512.0)	5.10 (129.5)	B
5000	4000	0.25 (6.4)	8.00 (203.2)	2	23.70 (602.0)	4.92 (125.0)	23.70 (602.0)	5.05 (128.3)	23.70 (602.0)	5.10 (129.5)	B

Single and Double Module Cross-Sections

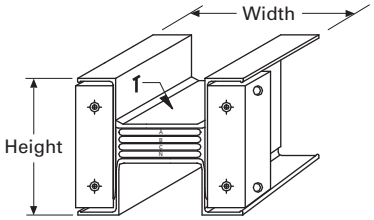

Figure A

225–2000 A Aluminum
225–2500 A Copper

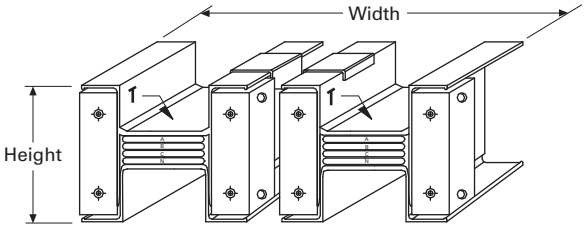

Figure B

2500–4000 A Aluminum
3200–5000 A Copper

Approximate Dimensions in Inches (mm)

Plug-In Busway

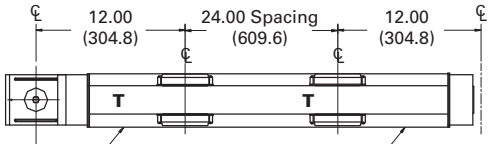

Configuration A Top View
1 Bar Per Phase

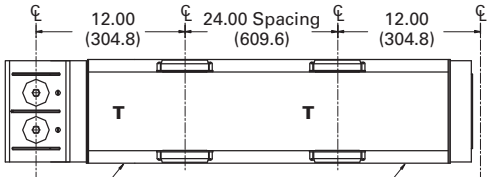

Configuration B Top View
1 Bar Per Phase

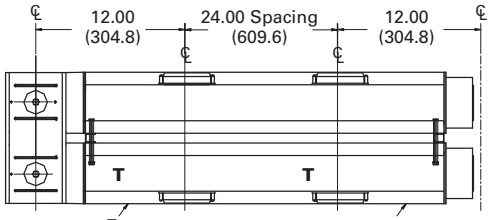

Configuration C Top View
2 Bars Per Phase

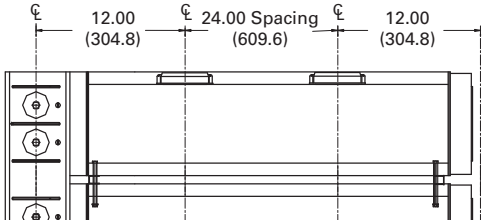

Configuration D Top View
2 Bars Per Phase

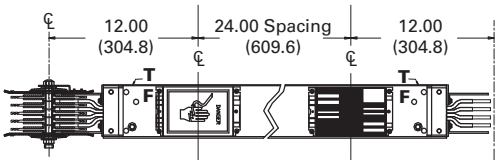

Front View

The table below illustrates the quantity of plug-in openings per side that are available per standard section.

Number of Plug-In Openings

Duct Length	Number of Plug-In Openings Front	Back
24.00 (609.6)	1	1
48.00 (1219.2)	2	2
72.00 (1828.8)	3	3
96.00 (2438.4)	4	4
120.00 (3048.0)	5	5

Feeder Busway

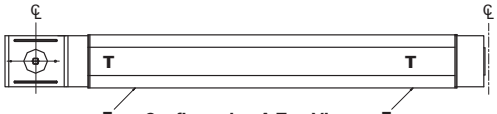

Configuration A Top View
1 Bar Per Phase

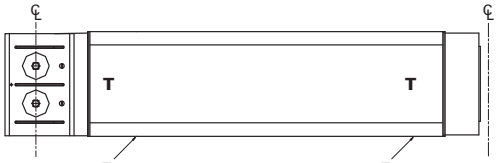

Configuration B Top View
1 Bar Per Phase

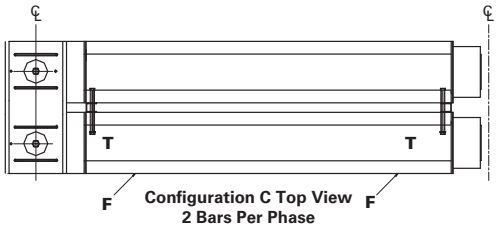

Configuration C Top View
2 Bars Per Phase

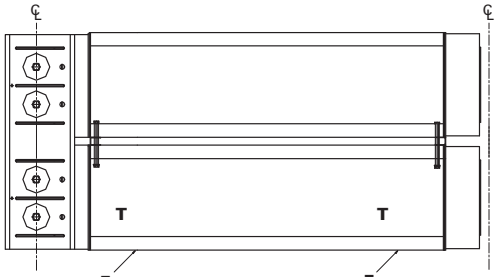

Configuration D Top View
2 Bars Per Phase

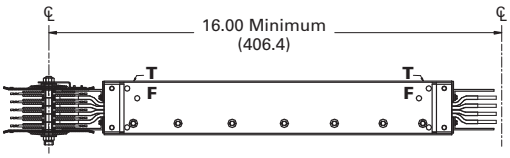

Front View

Approximate Dimensions in Inches (mm)

Quad Receptacle Unit

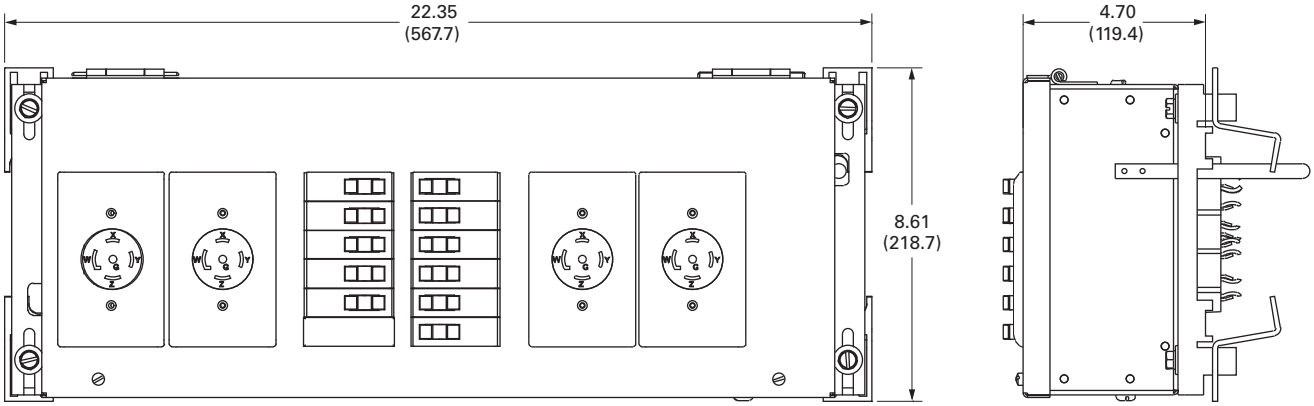

Single Receptacle Unit

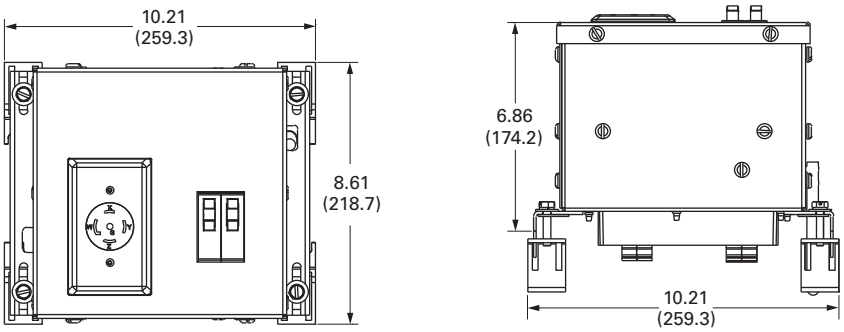

Approximate Dimensions in Inches (mm)

Plug-In Units—Physical Data

Bus Plugs

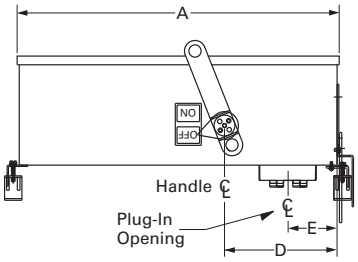

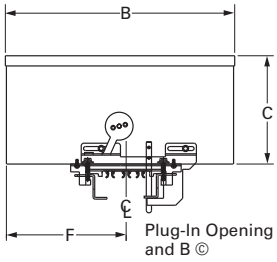

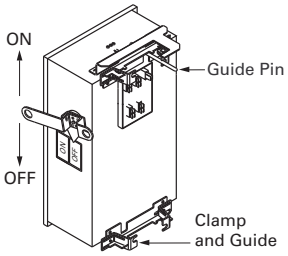

Plug-In Units

Plug-In Unit	Max. Amperes	Max. Vac	Dimensions A	B	C	D	E	F	Mechanical Terminal Wire Range Per Phase (mm²)	Approx. Weights Lbs (kg)
Circuit Breaker Plug-In Units										
P3BFD (E- & F-Frame)	225	600	21.20 (538.5)	12.36 (314.0)	5.43 (138.0)	4.00 (101.6)	6.25 (158.8)	6.06 (153.7)	100A–(1) #14–1/0 (2.5–50) 150A–(1) #4–4/0 (25–95)	25 (11.3)
P3BJD (J-Frame)	250	600	23.26 (590.8)	12.36 (314.0)	6.97 (177.0)	4.00 (101.6)	10.44 (265.2)	6.06 (153.7)	250A–(1) #14–350 kcmil (25–185) 225A–(1) 3–350 kcmil (35–185)	47 (21.3)
P3BKD (K-Frame)	400	600	34.41 (874.0)	13.29 (337.6)	7.79 (197.9)	4.00 (101.6)	12.56 (319.0)	6.64 (168.7)	350A–(1) 250–500 kcmil (120–240) 400A–(2) 3/0–250 kcmil (45–120)	53 (24.0)
P3BLD (L-Frame)	600	600	41.91 (1064.5)	19.65 (499.1)	10.15 (257.8)	4.00 (101.6)	17.38 (441.5)	9.83 (249.7)	400A–(1) 4/0–600 kcmil (120–300) 600A–(2) 400–500 kcmil (185–240)	75 (34.0)
P3BMDL (MDL-Frame)	800	600	45.89 (1165.6)	19.65 (499.1)	10.15 (257.8)	4.00 (101.6)	17.38 (441.5)	9.83 (249.7)	600A–(2) #1–500 kcmil (50–240) 800A–(2) 500–750 kcmil (300–400)	136 (61.7)
P3BND (N-Fame)	800	600	45.98 (1167.9)	19.65 (499.1)	10.15 (257.8)	4.00 (101.6)	17.38 (441.5)	9.83 (249.7)	700A–(2) # 1–500 kcmil (50–240) 800A–(3) 3/0–400 kcmil (95–185)	138 (62.6)
P3BLAP (TRI-PAC)	400	600	45.89 (1165.6)	19.65 (499.1)	10.15 (257.8)	4.00 (101.6)	13.80 (350.5)	9.83 (249.7)	225A–(1) #6–350 kcmil (16–185) 400A–(1) #4–250 kcmil and (1) 3/0–600 kcmil (25–120 and 95–300)	96 (43.5)
P3BLCL	400	600	41.86 (1063.2)	19.65 (499.1)	10.15 (257.8)	4.00 (101.6)	13.80 (350.5)	9.83 (249.7)	(1) #4–250 kcmil (25–120) and (1) 3/0–600 kcmil (95–300)	88 (39.9)
Fusible Plug-In Units										
P3F321RGH	30	240	14.72 (373.9)	13.92 (353.7)	8.46 (214.8)	3.85 (97.7)	7.95 (202.0)	5.66 (143.7)	Cu (1) #14–#3 (2.5–35)	32 (14.5)
P3F321RGV	30	240	15.85 (402.5)	14.03 (356.3)	8.46 (214.8)	3.85 (97.7)	6.72 (170.6)	5.66 (143.7)	Al (1) #12–#2 (3.2–35)	32 (14.5)
P3F361RGH	30	600	14.72 (373.9)	13.92 (353.7)	8.46 (214.8)	3.85 (97.7)	7.95 (202.0)	5.66 (143.7)	Cu (1) #14–#3 (2.5–35)	32 (14.5)
P3F361RGV	30	600	15.85 (402.5)	14.03 (356.3)	8.46 (214.8)	3.85 (97.7)	6.72 (170.6)	5.66 (143.7)	Al (1) #12–#2 (3.2–35)	32 (14.5)
P3F322RGH	60	240	14.88 (377.9)	17.92 (455.3)	8.37 (212.5)	3.85 (97.7)	11.95 (303.6)	5.66 (143.7)	Cu (1) #14–#3 (2.5–35)	40 (18.1)
P3F322RGV	60	240	19.85 (504.1)	14.16 (359.6)	8.37 (212.5)	3.85 (97.7)	6.84 (173.8)	5.66 (143.7)	Al (1) #12–#2 (3.2–35)	40 (18.1)
P3F362RGH	60	600	14.88 (377.9)	17.92 (455.3)	8.37 (212.5)	3.85 (97.7)	11.95 (303.6)	5.66 (143.7)	Cu (1) #14–1/0 (2.5–50)	40 (18.1)
P3F362RGV	60	600	19.85 (504.1)	14.16 (359.6)	8.37 (212.5)	3.85 (97.7)	6.84 (173.8)	5.66 (143.7)	Al (1) #12–1/0 (3.2–50)	40 (18.1)
P3F323RGH	100	240	14.88 (377.9)	17.92 (455.3)	8.37 (212.5)	3.85 (97.7)	11.95 (303.6)	5.66 (143.7)	Cu (1) #14–1/0 (2.5–50)	40 (18.1)
P3F323RGV	100	240	19.85 (504.1)	14.16 (359.6)	8.37 (212.5)	3.85 (97.7)	6.84 (173.8)	5.66 (143.7)	Al (1) #12–1/0 (3.2–50)	40 (18.1)
P3F363RGH	100	600	14.88 (377.9)	17.92 (455.3)	8.37 (212.5)	3.85 (97.7)	11.95 (303.6)	5.66 (143.7)	Cu (1) #4–250 kcmil (25–120)	40 (18.1)
P3F363RGV	100	600	19.85 (504.1)	14.16 (359.6)	8.37 (212.5)	3.85 (97.7)	6.84 (173.8)	5.66 (143.7)	Al (1) #4–250 kcmil (25–120)	40 (18.1)
P3F324RGH	200	240	17.42 (442.5)	21.98 (558.3)	8.52 (216.3)	3.85 (97.7)	15.44 (392.1)	6.80 (172.8)	Cu (1) #4–250 kcmil (25–120)	56 (25.4)
P3F324RGV	200	240	23.80 (604.5)	16.64 (422.8)	8.52 (216.3)	3.85 (97.7)	8.26 (209.8)	6.80 (172.8)	Al (1) #4–250 kcmil (25–120)	56 (25.4)
P3F364RGH	200	600	17.42 (442.5)	21.98 (558.3)	8.52 (216.3)	3.85 (97.7)	15.44 (392.1)	6.80 (172.8)	Cu (1) #4–600 kcmil (25–300)	56 (25.4)
P3F364RGV	200	600	23.80 (604.5)	16.64 (422.8)	8.52 (216.3)	3.85 (97.7)	8.26 (209.8)	6.80 (172.8)	Al (1) #4–600 kcmil (25–300)	56 (25.4)
P3F325R	400	240	48.85 (1242.1)	21.22 (539.0)	10.07 (255.8)	4.00 (101.6)	10.69 (271.5)	10.69 (271.5)	Cu/Al (1) 250–750 kcmil (127–380)	77 (34.9)
P3F365R	400	600	48.85 (1242.1)	21.22 (539.0)	10.07 (255.8)	4.00 (101.6)	10.69 (271.5)	10.69 (271.5)	Cu/Al (1) 250–750 kcmil (127–380)	77 (34.9)
P3F365HR	400	600	23.59 (599.2)	21.22 (539.0)	21.00 (533.4)	4.00 (101.6)	10.69 (271.5)	10.69 (271.5)	Cu/Al (2) 3/0–250 kcmil (85–127)	81 (36.7)
P3F326R	600	240	48.90 (1242.1)	26.31 (668.3)	10.59 (270.0)	4.00 (101.6)	13.16 (334.3)	13.16 (334.3)	Cu/Al (2) #2–600 kcmil (35–300)	82 (37.1)
P3F366R	600	600	48.90 (1242.1)	26.31 (668.3)	10.59 (270.0)	4.00 (101.6)	13.16 (334.3)	13.16 (334.3)	Cu/Al (3) #2–600 kcmil (25–300)	82 (37.1)
P3F327R	800	240	48.90 (1242.1)	26.31 (668.3)	10.59 (270.0)	4.00 (101.6)	13.16 (334.3)	13.16 (334.3)	Cu/Al (3) #2–600 kcmil (25–300)	108 (49.0)
P3F367R	800	600	48.90 (1242.1)	26.31 (668.3)	10.59 (270.0)	4.00 (101.6)	13.16 (334.3)	13.16 (334.3)	Cu/Al (3) #2–600 kcmil (25–300)	108 (49.0)

Pow-R-Flex Busway

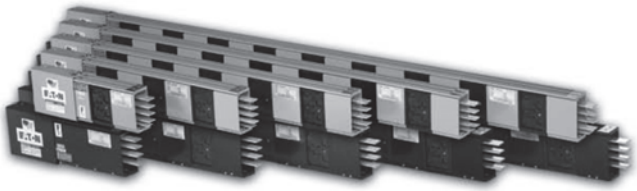

Contents

Description	*Page*
Pow-R-Flex Busway	
Features, Benefits and Functions	**V2-T6-32**
Standards and Certifications	**V2-T6-33**
Product Support	**V2-T6-33**
Catalog Number Selection	**V2-T6-36**
Technical Data and Specifications	**V2-T6-38**
Dimensions	**V2-T6-41**

Pow-R-Flex Busway

Product Description

The Perfect Package for any Low Ampere Application

Eaton's Pow-R-Flex Busway is the perfect package for any low ampere application. From manufacturing facilities and machine shops, to schools or private laboratories, as well as warehouse facilities, and data centers, Pow-R-Flex is the practical solution for applications using 600 A or less. Pow-R-Flex Busway is a 600 V design that uses the latest in extrusion construction for its all-aluminum housing. This busway product comes with either aluminum or copper conductors in feeder or plug-in type busway. The plug-in openings are shuttered for the ultimate in safety and people protection. With a full line of plug-in units and accessories, Pow-R-Flex Busway will get the job done.

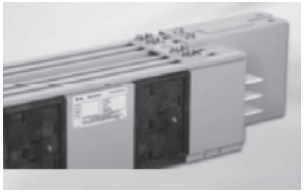

Assembled Plug-In Section

A Fully Enclosed Aluminum Housing Uses the Latest in Extrusion Construction

Eaton's Pow-R-Flex Busway is constructed with a heavy-duty, yet lightweight, "U" shaped aluminum base housing as well as extruded aluminum front covers. Incorporated together, these pieces form a unique hinge design to lock in the front covers. This design allows for clean lines, superior short circuit strength, and an aesthetic look and feel. This all-aluminum package provides excellent heat dissipation and less magnetic flux leakage when compared to steel. This housing design ensures a safe and durable installation that can be protected by either an ANSI 61 or black finish.

Extruded Aluminum Housing

The Pow-R-Flex Busway Bridge Joint Allows for Flexibility and Easy Future Additions

Pow-R-Flex joint connections are made with the Pow-R-Bridge joint package, which is shipped installed on one end of each section of busway. A tension indicating SmartBolt® is supplied as standard for Pow-R-Flex Busway. These bolts provide for visual indication of a loose or tensioned state within the joint pack via the color changing window on the bolt heads. The Pow-R-Bridge joint allows for an adjustment of ±0.50 inch. The non-rotating design allows for a stable, secure connection and easy reinstallation of a removed bridge joint.

Bridge Joint Assembly

Neutral and Grounding Options to Meet any Low Ampere Application

The aluminum housing of Pow-R-Flex has been designed, manufactured, and listed as a UL rated 50% integral ground/earth path. A 50% UL listed internal ground/earth can also be chosen as an option utilizing a separate conductor within the busway assembly. There is also an option for an isolated ground that uses the 50% internal ground bar and isolates it from the housing throughout the busway system and is UL listed as a 50% isolated ground path. For 4-wire systems, the neutral conductor is made from the same material as the phase conductors providing 100% to 200% neutral capacity on select current ratings.

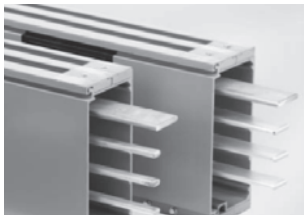

Joint End

Bus Plugs for Any Application

Pow-R-Flex plug-in protective devices have been designed to meet any low ampere application. Standard circuit breaker plugs are available in a traditional cable out style. Additionally, customized receptacle plugs are available with receptacle or connector options to meet any requirement. These plugs come with one to four devices feeding separate receptacles in an enclosure. Pow-R-Flex plugs and connectors can be ordered in a variety of combinations, cord lengths, and short circuit ratings.

Breaker Plug

Short-Circuit Ratings—Three-Cycle rms Symmetrical

Ampere Rating	Plug-In Short-Circuit Rating	Feeder Short-Circuit Rating
Aluminum		
150	22,000	22,000
225	35,000	35,000
300	35,000	35,000
400	42,000	42,000
Copper		
225	22,000	22,000
400	35,000	35,000
500	42,000	42,000
600	42,000	42,000

High 3-Cycle Short-Circuit Ratings Optimize Coordination Between Busway and Power Equipment and Meet High Quality Standards

All ratings of Pow-R-Flex have been tested to 3-cycle standards and have achieved a minimum rating of 22 kA and a maximum rating of 42 kA rms symmetrical.

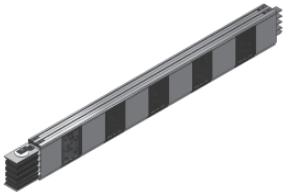

Straight Lengths

A Full Line of Fittings to Meet Any Routing Requirement

Pow-R-Flex Busway offers fittings to meet any need or application. End cable tap boxes, elbows, and end closers are all available for the most common runs. For more complex runs, equipment flanges, offsets, phase transpositions, and tees are available to accommodate any routing requirement.

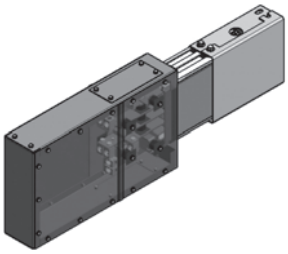

End Cable Tap Box

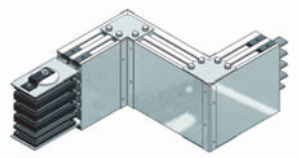

Forward Offset

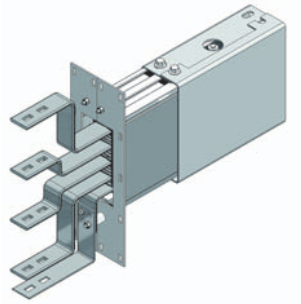

Standard Switchboard Flange

Joint Cover Assembly

General Information

Determine the total footage, all fittings, and accessories for the entire busway run. Price the total footage by type and system requirements. Round footage up to the nearest foot. Add the fabrication charge for the fittings. Add any additional accessories required for the total price of the busway run.

Plug-In

Straight sections of plug-in busway are available in 2 ft (0.6 m) increments from a 2 ft (0.6 m) minimum to a 10 ft (3 m) maximum.

Feeder

Straight sections of feeder busway are available in 1/2-inch (12.8 mm) increments from 24-inch (609.6 mm) minimum to 10-ft (3 m) maximum. Pow-R-Bridge joint is included.

Ground

A 50% integral housing ground is provided as standard. The housing ground can be used in combination with the internal ground or the isolated ground to achieve a 100% ground rating.

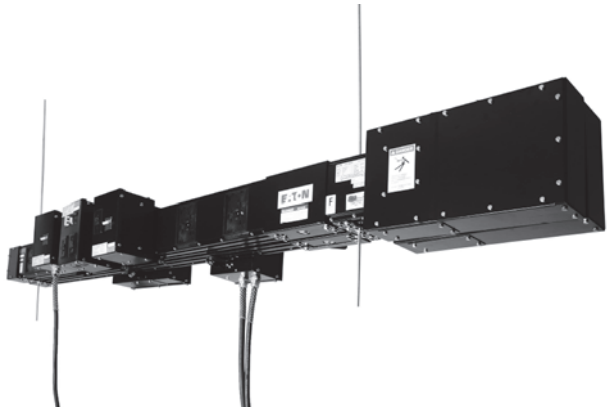

Traditional Indoor and Outdoor Elbows

Elbows are used to make 90° changes in the direction of busway runs. The four types that are available are forward, rearward, upward and downward.

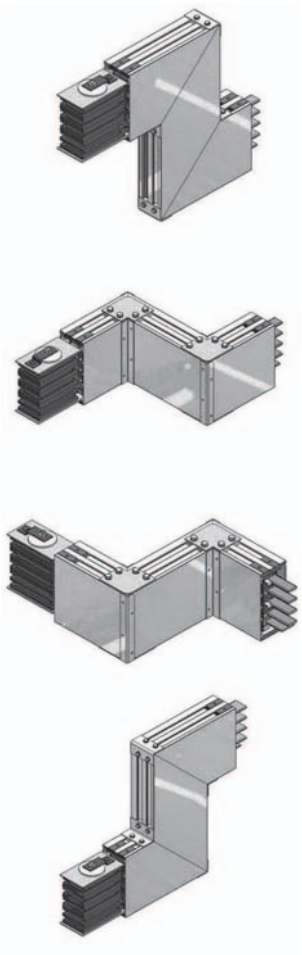

Tees

A tee is a busway fitting suitable for connection in three directions.

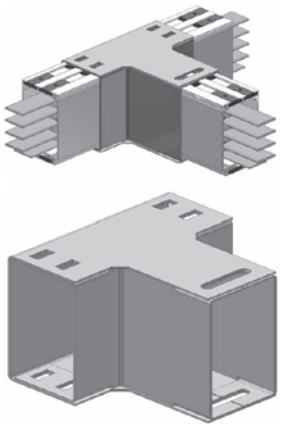

Wall Flanges

Wall flanges fit around the busway and are designed to close off the wall gap opening around the busway, made to allow the busway to pass through a wall Wall flanges are primarily for cosmetic purposes and do not provide any type of vapor or fire barrier.

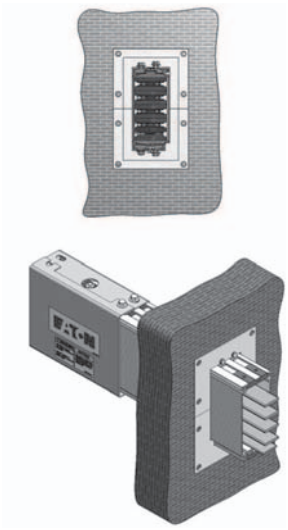

Cable Tap Boxes

There are two types of cable tap boxes: end and center. End cable tap boxes are used to feed power to a run of busway with cable and conduit or where loads served by busway are connected without the need of overcurrent protection. There are two designs for end cable tap boxes. One is for a left-hand orientation and one for a right-hand orientation. The two separate designs allow for the bus to be mounted flush against the wall no matter which direction your busway is running. Center cable tap boxes are used to center feed a run of busway with cable and conduit or where loads served by the busway are connected without the need of overcurrent protection. Advanced metering options are also available.

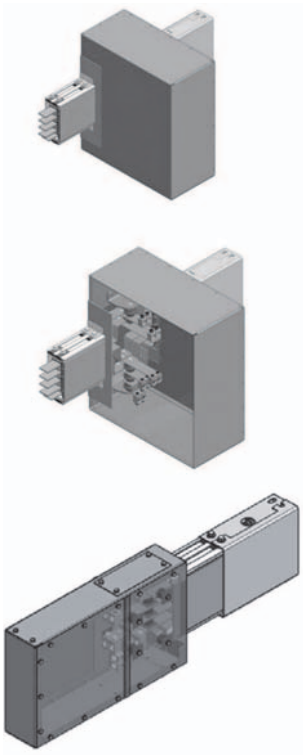

Standard Flanges

Flanges provide a direct connection to low voltage switchgear, switchboards, motor control centers and other apparatus. Cutout dimensions and drilling plans are provided with the customer drawings, and it is the responsibility of the switchgear manufacturer to provide the opening, flange drillings, connecting hardware and bus risers in their equipment. For proper coordination between busway and other equipment, detailed drawings, including switchgear orientation, must accompany the order. A standard flange can be supplied to the left or right of a section, as required.

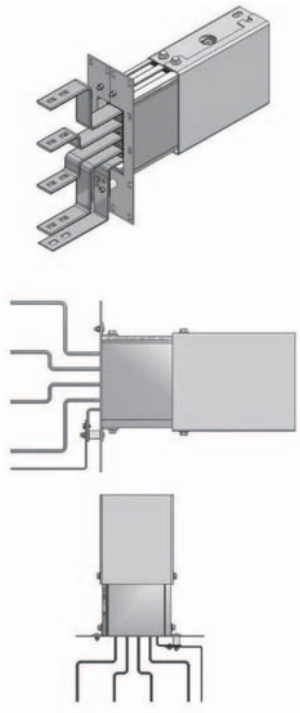

Expansion Joints

Expansion joints accommodate the expansion and contraction of busbars with respect to the enclosure. They compensate for the difference in the coefficient of expansion of the aluminum housing and the copper or aluminum busbars. Expansion joints must be used wherever a run of busway crosses an expansion joint of a building. They should also be installed in the center of extremely long straight runs of busway; one every 300 ft (91 m) for copper or one every 225 ft (68 m) for aluminum.

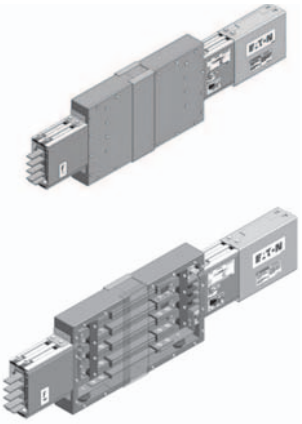

Phase Transpositions

Phase transposition fittings are used in applications where a phase rotation is needed due to a change in phasing from the source equipment to the load equipment. There are two types of phase transpositions: 90 degree and 180 degree in both types; all conductors are transposed.

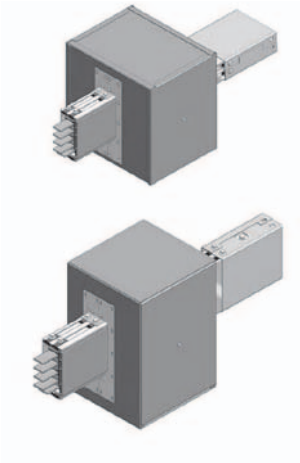

Vapor–Fire Barriers

Vapor–fire barriers hold a two-hour fire rating and are used to seal the busway internally for penetrations through walls, floors, and other fire-rated penetrations, preventing the passage of flame, noxious gas, smoke, and moisture. The exact location of the wall is required to properly position the barrier within the busway run.

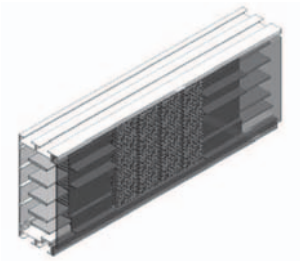

Features, Benefits and Functions

Pow-R-Flex Offers a Full Line of Low Voltage Busway to Meet all Customer Needs

Eaton has combined the requirements of NEMA, UL and CSA into one design to present a world-class product in Pow-R-Flex. With standard features that include an extruded aluminum housing, mechanical shutters over plug-in outlets, an integral ground path and industry-leading 3-cycle short-circuit withstand ratings, Pow-R-Flex provides a busway system that can be used over a broad spectrum of industrial, commercial and institutional applications worldwide.

Product Offering

- **Plug-In Busway**
  225–600 A copper and 150–400 A aluminum straight sections of plug-in busway are available in 2 ft (0.6 m) incremental lengths from a 2 ft (0.6 m) minimum to 10 ft (3 m) maximum
- **Feeder Busway**
  225–600 A copper and 150–400 A aluminum straight sections of indoor and outdoor feeder busway available in any length in 1/2-inch (12.8 mm) increments from a 24-inch (609.6 mm) minimum to a 10-foot (3 m) maximum. Standard plug-in units and a full line of receptacle plug-in units are available with fusible or circuit breaker overcurrent protection. Surge Protection Devices (SPD) are also available
- **Plug-In Units**
  A full family of busway plug-in units is available. Standard plug-in units include fusible or circuit breaker protection. Surge Protection Devices (SPD) and a full line of receptacle plug-in units are available

Product Features and Benefits

- The all-aluminum extruded housing provides durability and product integrity
- The lightweight and compact design results in easy installation
- Tin or silver-plated joint and contact surfaces provide high-quality connections
- Highly automated manufacturing processes result in a superior product
- The Pow-R-Bridge™ joint package and torque indicating bolt gives a rugged, yet flexible and easy-to-install connection
- 3-cycle short-circuit ratings optimize coordination between busway and power equipment
- This world-class product design and manufacturing meets the requirements of NEMA, CSA, Seismic and ISO® and IEEE®
- Plug-in busway design and an enhanced bus plug-in unit facilitates installation and improves safety
- Flexible ground and neutral options provide solutions for any application problem
- A full family of plug-in units is available for every power need
- Advanced bus plugs provide protection, communication and coordination capabilities

Busway Capabilities

- The busway manufacturing plant in Greenwood, SC, is able to meet your emergency or quick ship requirements with quick ship lead-times from 3 to 4 weeks
- Customer approval drawings can be available in *2 weeks or less* to meet your project requirements
- Eaton's final field fit program ensures accurate layout and allows for minor last-minute modifications during installation
- Advanced system tools including Bid Manager™ programs provide quick and accurate product information

Standards and Certifications

- Pow-R-Flex meets the requirements of NEMA, UL 857, CSA C22.2 No. 27-94, IEEE and ANSI and is manufactured in an ISO 9001 certified facility
- Pow-R-Flex meets the International Building Code standards and is certified in the Uniform Building Code® and the California Building Code to exceed Zone 4 requirements
- ANSI, NEMA, IEEE, CSA, UL 857
- 10 kAIC rms symmetrical
- Fused duplex—40 A maximum
- Single—70 A maximum
- Quad—125 A maximum

Product Support

Busway product and application support is available from a professional team of Eaton employees that includes field sales engineers, application engineers, engineering service systems and the greenwood busway product engineering services.

Additional Programs

Final Field Fit—This program was established to effectively manage the dimensional uncertainties that are often inherent in bus duct layouts. This program provides the assurance of an exact fit the first time. It allows for bus duct runs to be released for manufacture when certain dimensions are not yet determined. It also eliminates the costly delays that can occur when sections have to be remade in order to accommodate last-minute job site changes in routing. For program details, please see publication SA01702001E.

Field Measurements—For larger and more complex projects, Eaton will provide factory assistance with taking busway layout measurements. We will take full accountability of all measurements and will ensure an exact fit. Contact your local Eaton sales office for pricing and availability.

Additional Information

- Product Brochure: BR01701003E
- Technical Data: TD01701003E
- Consulting Application Guide: CA08104001E
- Electrical Solutions Catalog: CA08105001E
- ABCs of Planning/ Installation: IM01701002E
- Services and Solutions: BR01701002E

Pow-R-Flex

- Technical Data: TD01701003E
- ABCs of Busway: IM01701002E
- Brochure: BR01701001E

Service and Solutions

- Installation and Maintenance: IB01701001E
- Selling Policy: 25-000
- Discount Symbol: CE3-LV Busway CE4-LV Busway Devices

Power Where You Need it!

As a leader in providing quality, robust, cutting-edge electrical distribution equipment, Eaton understands the importance of providing usable power access in a variety of applications. Eaton's Pow-R-Flex busway continues to offer electrical distribution solutions that are flexible and without limitations, and are energy efficient, saving time and money.

Plug-In Unit Overcurrent Protective Devices

General Information

A variety of plug-in units have been designed for the Pow-R-Flex low-ampere busway to meet multiple applications and a variety of installation conditions. Plug-in unit devices provide easy and flexible access to a building's electrical power system, while providing safe overcurrent protection to equipment and wiring.

All Pow-R-Flex plug-in units are designed with the safety of the installer and user as the key criteria. The following safety features are standard for all fusible and molded-case circuit breaker plug-in units:

- Each plug-in unit ground stab makes positive contact with the busway ground (integral or internal) before the phase or neutral stabs contact the busbars
- Plug-in unit molded guide tabs are provided in the stab support base. These ensure proper phase alignment and open the busway outlet shutter mechanism
- Line-side barriers are provided over the line-side terminal to help prevent accidental contact with line-side connections
- Each plug-in unit has mounting flanges, which help protect the stab-base assembly and have captive hardware that bolt the unit securely to the busway

Pow-R-Flex Receptacle Plug-In Units

Eaton now offers a full line of receptacle plug-in units for use on Pow-R-Flex busway. Pow-R-Flex receptacle plug-in units are non-serviceable plugs. This means they come fully assembled and wired, reducing installation time. They are UL listed and offer a complementary line of accessories. Eaton's unique design makes them the most flexible receptacle units in the industry.

Data Centers—Data racks continue to process more information at higher speeds with constantly changing demands. Pow-R-Flex receptacle plugs offer the highest short-circuit ratings in the industry. Busway and receptacle plugs above the data racks provide faster installation, faster connectivity, easier rack changes and upgrades, and will run cooler than traditional cable methods.

Retail—As retail environments change meeting customer demands, Pow-R-Flex busway and receptacle plugs help make floor layout and display changes easier. Receptacle plugs allow for easy power access, eliminating costly conduit and cable work.

Schools and Laboratories—Pow-R-Flex receptacle plugs offer safe power access for instrumentation and other lab equipment at the point of use.

Single Receptacle Unit (600 V Maximum)

The single receptacle unit shown in below is configured to order based upon the receptacle type and rating. These units are three-phase and can service single- or three-phase loads up to 600 V maximum (120 V, 240 V, 400 V, 480 V, 600 V, 208Y/120 V, 400/230 V, 480/277 V, 600/347 V). Type F-Frame bolt-on molded-case circuit breakers are used in single-pole, two-pole, or three-pole configurations. Single and double receptacle plugs are also available in our mini plug design, which utilizes either a GHC circuit breaker or a CCP fusible switch in a smaller enclosure. Each unit comes with one receptacle, with the breaker sized per the receptacle rating. Each receptacle can be fixed-mounted to the front of the enclosure or cable-mounted to a cord drop coming out of the bottom of the enclosure. See below. Cord drop lengths may be 1–15 ft in 1-ft increments.

Consult NEC Sections 368, 400 and 645 for cord drop applications.

Single Receptacle Unit (Enclosure Mounted)

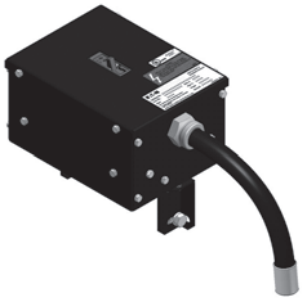

Single Receptacle Unit (Cord Mounted)

Double Receptacle Unit (600 V Maximum)

The double receptacle unit shown below is configured to order based upon the receptacle type and rating. These units are three-phase and can service single- or three-phase loads up to 600 V maximum (120 V, 240 V, 400 V, 480 V, 600 V, 208Y/120 V, 400/230 V, 480/277 V, 600/347 V). Type F-Frame bolt-on molded-case circuit breakers are used in single-pole, two-pole, or three-pole configurations. Single and double receptacle plugs are also available in our mini plug design, which utilizes either a GHC circuit breaker or a CCP fusible switch in a smaller enclosure. Each unit comes with two receptacles, with the breakers sized per the receptacle rating. Each receptacle is cable mounted to a cord drop coming out of the bottom of the enclosure. See below. Cord drop lengths may be 1–15 ft in 1-ft increments. Consult NEC Sections 368, 400 and 645 for cord drop applications.

Double Receptacle Unit (Enclosure Mounted)

Double Receptacle Unit (Cord Mounted)

Quad Receptacle Units (600 V Maximum)

The quad receptacle unit shown below is configured to order based upon the receptacle type and rating. These units are three-phase and can service single- or three-phase loads up to 600 V maximum (120 V, 240 V, 400 V, 480 V, 600 V, 208Y/120 V, 400/230 V, 480/277 V, 600/347 V). Type F-Frame bolt-on molded-case circuit breakers are used in single-pole, two-pole, or three-pole configurations. Each unit comes with up to four receptacles, with the breakers sized per the receptacle rating. Each receptacle can be fixed mounted to the front of the enclosure or cable-mounted to a cord drop coming out of the bottom of the enclosure. See below. Cord drop lengths may be 1–15 ft in 1-ft increments. Consult NEC Sections 368, 400 and 645 for cord drop applications.

Quad Receptacle Unit (Cord Mounted)

Catalog Number Selection

Breaker Unit

LAB FDB 3100 G N

Bus Style	Breaker Frame	Trip Rating	Ground Option	Neutral Option
LAB = Low Ampere	(Ex. **FD, JDB**)	(Ex. **3015, 3225**)	**G** = Internal **I** = Isolated	**N** = 100% **N2** = Oversized

SPD Series Bus Plug

LABSPD 250 480Y 2 C

Fixed—do not change

Fixed—do not change

Surge Rating (kA/Phase)	
50	**200**
80	**250**
100	**300**
120	**400**
160	

Voltage Code
208Y = 208Y/120 V (4W + G)
400Y = 400Y/230 V (4W + G)
480Y = 480Y/277 V (4W + G)
600Y = 600Y/347 V (4W + G)
240D = 240 Delta (3W + G)
480D = 240 Delta (3W + G)
600D = 240 Delta (4W + G)

Option Code
1 = Basic—Dual-colored LED per phase to indicate protection status of the N-G mode on units with a neutral wire, single-colored LED to indicate the lack of a neutral wire connection on systems with a neutral wire.
2 = Standard—Dual-colored LED per phase to indicate protection status of the N-G mode on units with a neutral wire, single-colored LED to indicate the lack of a neutral wire connection on systems with a neutral wire, audible alarm with silence button and Form C relay contact.
3 = Standard + Surge Counter—Dual-colored LED per phase to indicate protection status of the N-G mode on units with a neutral wire, single-colored LED to indicate the lack of a neutral wire connection on systems with a neutral wire, audible alarm with silence button, Form C relay contact, EMI/RFI filtering providing up to 50 dB of noise attenuation from 10 kHz to 100 MHz and surge counter with reset button.

Plug-In Cable Outlet Details

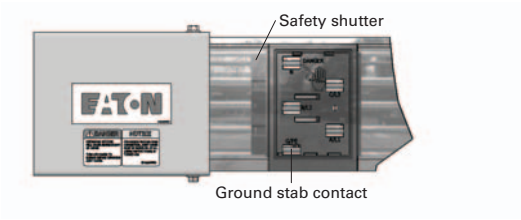

Plug-in Cable Tap Boxes

Plug-in cable tap boxes are used to back feed power to a run-off busway, or where equipment served by the busway is connected without overcurrent protection. Plug-in cable tap boxes fit into any plug-in provision on a plug-in type busway. See below.

Plug-In Cable Tap Box Details

Catalog Number	Ampere Rating	Mechanical Lugs (Metric)	Mechanical Lugs (Standard)
LAPTB100MG	100	#6–3/0	4.11–10.40 mm
LAPTB100MGN	100	#6–3/0	4.11–10.40 mm
LAPTB200MG	200	#6–3/0	4.11–10.40 mm
LAPTB200MGN	200	#6–3/0	4.11–10.40 mm

Special Plug-In Units

- Mechanical lugs are provided. If compression lugs are required, the cable size must be specified

Plug-In Cable Tap Box

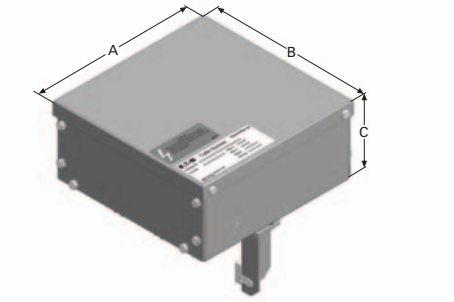

Plug-In Cable Tap Box Dimensions

Catalog Number	A	B	C
LAPTB100MG	9.33 (236.9)	18.21 (462.5)	8.18 (207.8)
LAPTB100MGN	9.33 (236.9)	18.21 (462.5)	8.18 (207.8)
LAPTB200MG	9.33 (236.9)	18.21 (462.5)	8.18 (207.8)
LAPTB200MGN	9.33 (236.9)	18.21 (462.5)	8.18 (207.8)

Plug-In Cable Tap Box Details

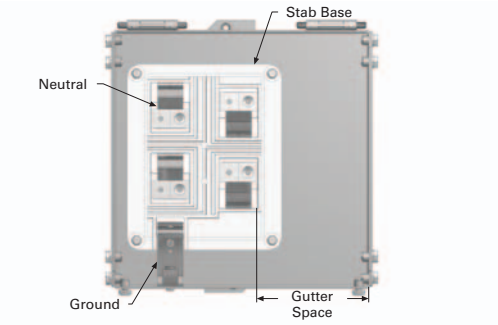

Technical Data and Specifications

Ratings

A. The busway shall be Eaton type Pow-R-Flex and shall be:

1. 1-phase, 3-wire with 50% integral housing ground.
2. 1-phase, 3-wire with 50% internal ground bar or 50% isolated internal ground bar.
3. 3-phase, 3-wire with 50% integral housing ground.
4. 3-phase, 3-wire with 50% internal ground bar or 50% isolated internal ground bar.
5. 3-phase, 3-wire with 100% ground.
6. 3-phase, 4-wire with 100% neutral and 50% integral housing ground.
7. 3-phase, 4-wire with 100% neutral and 50% internal ground bar or 50% isolated internal ground bar.

B. Copper busway shall have a minimum of 3-cycle short-circuit rating of 22 kA rms symmetrical for 225 A ratings, 35 kA rms symmetrical for 400 A ratings, 42 kA rms symmetrical for 500 and 600 A ratings.

C. Aluminum busway shall have a minimum of 3-cycle short-circuit rating of 22 kA rms symmetrical for 150 A ratings, 35 kA rms symmetrical for 225 A ratings, 42 kA rms symmetrical for 300 and 400 A ratings.

Construction

A. The busway and associated fittings shall consist of copper or aluminum conductors totally enclosed in a non-ventilated 2-piece extruded aluminum housing. Indoor feeder and indoor plug-in busway shall be interchangeable at the same rating without the use of adapters or special splice plates. Fittings—(elbows, tees, flanges, etc.) shall be identical for use with both the plug-in and feeder types of busway. The busway shall be capable of being mounted flat-wise, edgewise or vertically without derating. The busway shall consist of standard 10-foot sections with special sections and fittings provided to suit the installation. Horizontal runs shall be suitable for hanging on 10-foot maximum centers. Provide one (1) hanger for every ten (10) feet of horizontally mounted duct.

Bus

A. Busbars shall be fabricated from high strength, 55% conductivity aluminum or 98% conductivity copper and shall be silver-plated at all joint and contact surfaces.

B. The busway shall be capable of carrying rated current continuously without exceeding a temperature rise of 55 °C based on a 40 °C ambient.

Bus Joints

A. Each busway section shall be furnished complete with joint hardware and covers. The busway joints shall be a single-bolt, non-rotating, removable bridge design. All bridge joints shall be furnished with a tension-indicating SmartBolt® and Belleville washer. The bridge joint shall utilize a captive nut retainer on the opposite side of the torque-indicating bolt. The bridge joint design shall ensure proper installation without the use of a torque wrench, and provide visual indication that the joint has been tightened to the proper internal tension. Each busway joint shall allow for a minimum length adjustment of ±0.5 inches. De-energization of busway shall not be required for safe testing of joint tightness.

Housing

A. The busway housing shall be a two-piece design fabricated from extruded aluminum. The two-piece housing shall consist of a base channel and interlocking front cover bolted together, along the bottom flange. The busway enclosure finish shall be ANSI 61 gray or black and shall conform to UL requirements.

B. The busway conductors shall be totally enclosed within the housing and shall not require any optional covers to prohibit access to the conductors.

Plug-In Busway

A. Where required, busway shall be of the plug-in type. Plug-in busway shall be available in standard 2-, 4-, 6-, 8- and 10-foot lengths, with plug-in openings provided on one side of the busway sections on 12-inch centers. The plug-in openings shall not have hinged or removable covers and shall have an integral shutter that slides open when a plug-in unit is being inserted. The integral shutter mechanism shall prohibit dirt and debris from entering contact plug-in openings in the busway. The design shall allow for nine (9) plug-in opening outlets per ten (10) feet of plug-in length. The integral shutter mechanism for plug-in openings shall have a positive screw close feature that prevents the shutter from being opened when the plug-in opening is not being utilized by a plug-in unit. A standard housing ground connection shall be supplied in each plug-in opening. Positive mechanical guides for plug-in units shall be provided at each plug-in opening to facilitate unit alignment, engage shutter mechanism and prevent improper installation.

Circuit Breaker Type Plug-In Devices

A. Where required, plug-in units of the types and ratings indicated on the plans and specifications shall be supplied. Plug-in units shall be mechanically interlocked with the busway housing to prevent their installation or removal while the switch is in the ON position. The enclosure of any plug-in unit shall make positive ground connection to the duct housing before the stabs make contact with the busbars. All plug-in units shall be equipped with an interlock that can be defeated to prevent the cover from being opened while the switch is in the ON position and to prevent accidental closing of the switch while the cover is open. The plugs shall be provided with a means for padlocking the cover closed and padlocking the disconnect device in the OFF position. The operating handle and mechanism shall remain in control of the disconnect device at all times, permitting its easy operation from the floor by means of a hook stick or chain. All plug-in units shall be interchangeable without alteration or modification of plug-in duct.

B. All plug-in unit types and ratings must be fully interchangeable for use on all busway ampere ratings.

C. Circuit breaker-type plugs shall have an interrupting rating as shown in the contract documents, and shall meet all requirements of UL Standard 489. All breaker plug-in devices shall be from the same manufacturer as the busway.

Plug-In Devices with Receptacles

A. Where required, plug-in units of the types and ratings indicated on the plans and specifications shall be supplied. Plug-in units shall be mechanically interlocked with the busway housing to prevent their installation or removal while the switch is in the ON position. The enclosure of any plug-in unit shall make positive ground connection to the duct housing before the stabs make contact with the busbars. All plug-in units shall be equipped with an interlock that can be defeated to prevent the cover from being opened while the switch is in the ON position and to prevent accidental closing of the switch while the cover is open. The plugs shall be provided with a means for padlocking the cover closed and padlocking the disconnect device in the OFF position. The operating handle and mechanism shall remain in control of the disconnect device at all times, permitting its easy operation from the floor by means of a hook stick or chain. All plug-in units shall be interchangeable without alteration or modification of plug-in duct.

B. All plug-in unit types and ratings must be fully interchangeable for use on all busway ampere ratings.

C. Receptacle type plugs shall have fused or circuit breaker over-current protection. Circuit breakers shall be plug-on or bolt-on type with an interrupting rating of 10 kA or 22 kA three-phase at 240 V, 25 kA single-phase at 240 V, 10 kA at 400 V and 480 V and 10 kA at 600 V. Fused switches will have an interrupting rating that matches that of the busway it is attached to, and shall limit the let-through current from the plug through the receptacle to less than 10 kA IR. All fault current ratings shall be symmetrical rms amperes. Circuit breakers and fusible switches shall be from the same manufacturer as the busway. Receptacles shall be UL listed, any standard NEMA configuration and either bolted to the enclosure or affixed to an electrical cord dropped down from the enclosure. Cord drops shall use UL listed strain relief devices. Receptacle type plugs shall come fully assembled and wired from the manufacturer. Field kits for drop cords and receptacles shall not be acceptable. For fault current ratings above 22 kA at 240 V or 10 kA at 400 V and/or 480 V, the connector/receptacle and breaker combination must be tested to UL 231 and UL approved.

Surge Protective Devices

A. Provide surge protective devices as specified in Section 16671A.

End Cap Tap Boxes

A. End cable tap boxes shall be configured to accept up to (2) 350 kcmil cables per phase and shall conform to UL 857 and NEC standards for wire bend space. Left and right side removable covers shall be provided for easy cable access. Lug access covers shall be provided for easy access to cable termination lugs. Cable tab boxes shall be mountable against a wall without causing the busway to be offset from the wall.

B. End cable tap boxes shall allow for CTs to be mounted within the tap box for metering.

Busway Whole Run Metering

A. An electronic power meter equivalent to an Eaton IQ250/260 electronic power meter shall be use to monitor power utilization for each busway run and shall be mounted in a separate enclosure bolted to each end cable tap box

B. The electron power meter shall have a digital display showing real-time information about critical power parameters for each phase. Each phase shall be visible on the display simultaneously.

C. The electronic power meter shall comply with ANSI C12.20 for power utilization and quality with an accuracy of 0.2 percent.

D. The electronic power meter shall be capable of monitoring the following parameters for each phase: current, current demand, neutral current, voltage, frequency; real, reactive and apparent power, total and per phase: power factor, total and per phase; and minimum and maximum readings for each parameter.

E. The electronic power meter shall communicate in RS-485 or Modbus RTU or Modbus ASCII or DNP 3.0 and KYZ output. Shall also be capable of optional I/O.

Dimensions

Approximate Dimensions in Inches (mm)

Busbar and Housing

Physical Dimensions—Width x Height

Ampere Rating	Phase Conductor	Ground Conductor	Housing Enclosure
Aluminum			
150	0.28 x 0.50 (7.1 x 12.7)	0.20 x 1.75 (5.1 x 44.5)	3.60 x 8.30 (91.4 x 210.6)
225	0.28 x 1.25 (7.1 x 31.8)	0.20 x 1.75 (5.1 x 44.5)	3.60 x 8.30 (91.4 x 210.6)
300	0.28 x 1.25 (7.1 x 31.8)	0.20 x 1.75 (5.1 x 44.5)	3.60 x 8.30 (91.4 x 210.6)
400	0.28 x 1.75 (7.1 x 44.5)	0.20 x 1.75 (5.1 x 44.5)	3.60 x 8.30 (91.4 x 210.6)
Copper			
225	0.28 x 0.50 (7.1 x 12.7)	0.20 x 1.75 (5.1 x 44.5)	3.60 x 8.30 (91.4 x 210.6)
400	0.28 x 1.25 (7.1 x 31.8)	0.20 x 1.75 (5.1 x 44.5)	3.60 x 8.30 (91.4 x 210.6)
500	0.28 x 1.75 (7.1 x 44.5)	0.20 x 1.75 (5.1 x 44.5)	3.60 x 8.30 (91.4 x 210.6)
600	0.28 x 1.75 (7.1 x 44.5)	0.20 x 1.75 (5.1 x 44.5)	3.60 x 8.30 (91.4 x 210.6)

Oversized Neutral Ratings

Ampere Rating	Neutral Size D x W	Neutral Rating
Aluminum		
150	0.28 x 1.75 (7.1 x 44.5)	250%
225	0.28 x 1.75 (7.1 x 44.5)	150%
300	0.28 x 1.75 (7.1 x 44.5)	150%
400	0.28 x 1.75 (7.1 x 44.5)	100%
Copper		
225	0.28 x 1.75 (7.1 x 44.5)	250%
400	0.28 x 1.75 (7.1 x 44.5)	150%
500	0.28 x 1.75 (7.1 x 44.5)	100%
600	0.28 x 1.75 (7.1 x 44.5)	100%

Conductor Dimensions

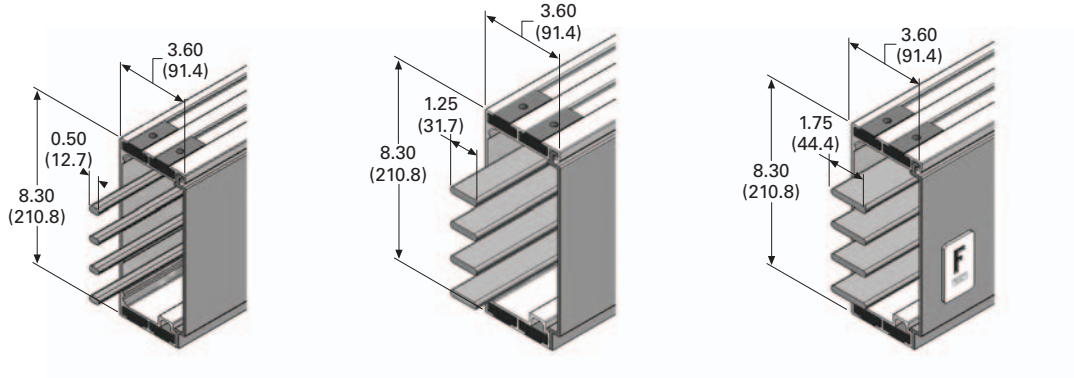

Approximate Dimensions in Inches (mm)

Plug-In Busway

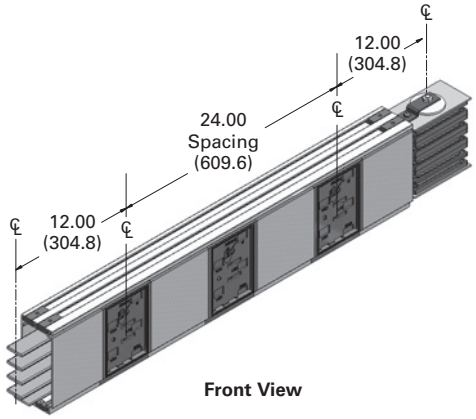

Feeder Busway

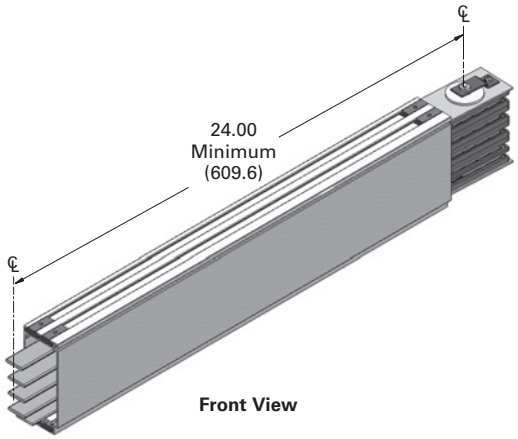

Single Receptacle Mini Plug Unit

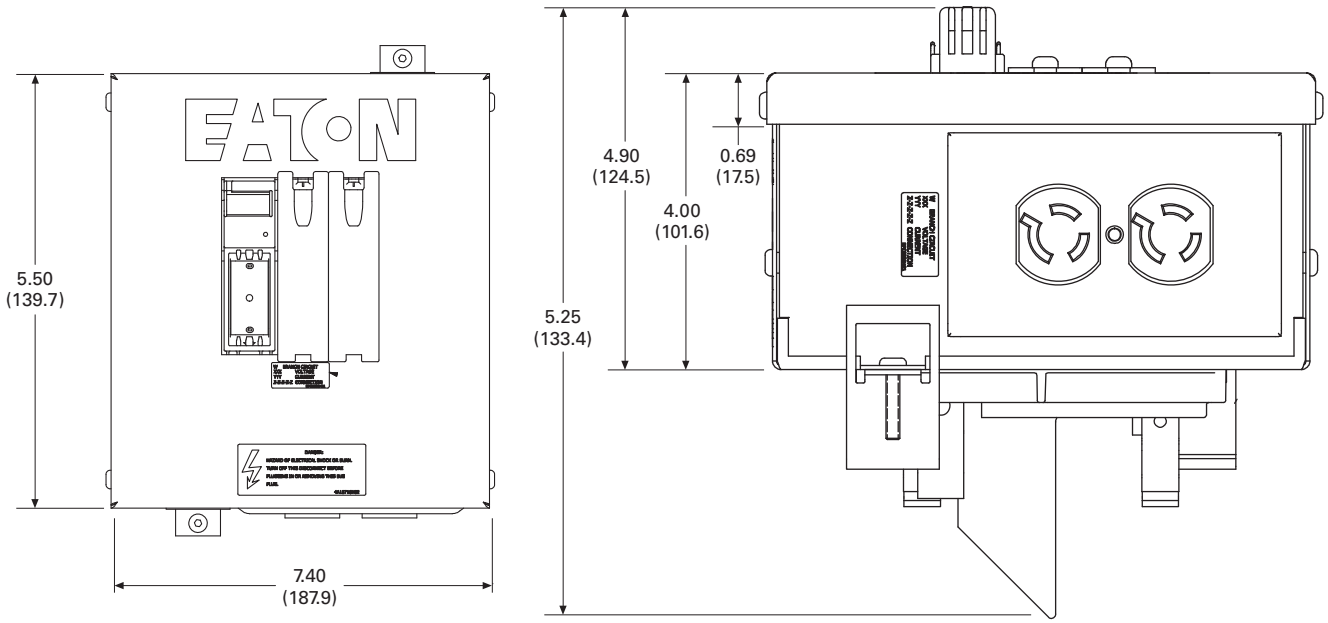

Approximate Dimensions in Inches (mm)

Double Receptacle Mini Plug Unit

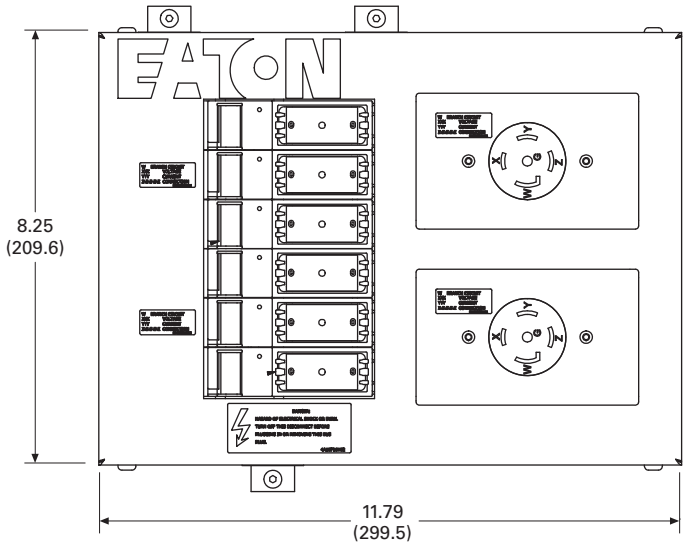

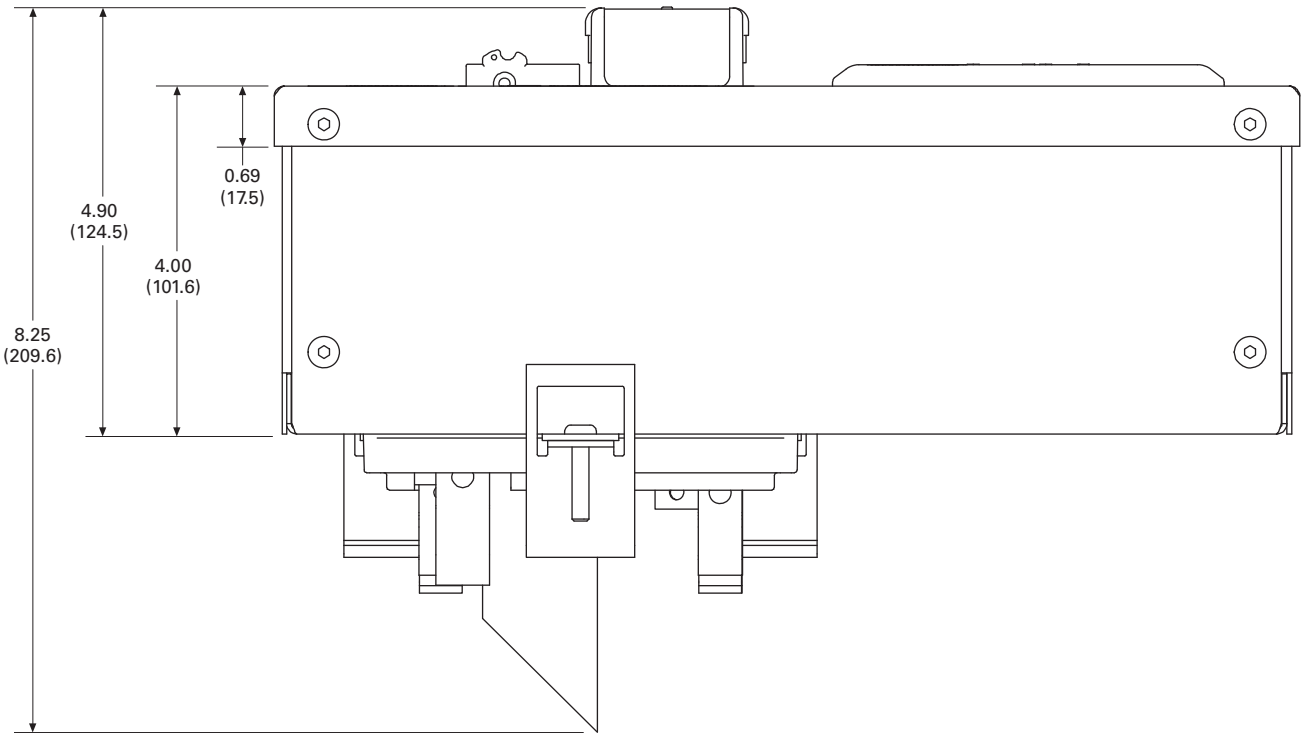

Approximate Dimensions in Inches (mm)

Plug-In Unit Devices

Receptacle Unit Physical Dimensions

Plug-In Unit Type	Protective Device	Voltage	Width	Height	Depth
Single	GHC	480	7.50 (190.5)	8.60 (218.4)	4.00 (101.6)
	FD	400	8.50 (215.9)	11.50 (292.1)	6.50 (165.1)
	FD	480	8.50 (215.9)	11.50 (292.1)	6.50 (165.1)
	CCP switch	400	7.50 (190.5)	8.60 (218.4)	4.00 (101.6)
	CCP switch	480	7.50 (190.5)	8.60 (218.4)	4.00 (101.6)
Double	GHC	480	11.80 (299.7)	8.75 (222.3)	4.00 (101.6)
	FD	400	11.00 (279.4)	12.00 (304.8)	6.40 (162.6)
	FD	480	11.00 (279.4)	12.00 (304.8)	6.40 (162.6)
	CCP switch	400	11.80 (299.7)	8.75 (222.3)	4.00 (101.6)
	CCP switch	480	11.80 (299.7)	8.75 (222.3)	4.00 (101.6)
Quad	FD	240	20.50 (520.7)	11.30 (287.0)	7.10 (180.3)
	FD	400	20.50 (520.7)	11.30 (287.0)	7.10 (180.3)
	FD	480	20.50 (520.7)	11.30 (287.0)	7.10 (180.3)

Receptacle Unit Short-Circuit Withstand Rating (rms Symmetrical)

Plug-In Unit Type	Breaker Type	240 V	400 V	480 V
Single	GHC	10,000 A	10,000 A	10,000 A
	FD ①	22,000 A	10,000 A	10,000 A
	CCP switch ②	42,000 A	42,000 A	42,000 A
Double	GHC	10,000 A	10,000 A	10,000 A
	FD ①	22,000 A	10,000 A	10,000 A
	CCP switch ②	42,000 A	42,000 A	42,000 A
Quad	FD ①	22,000 A	10,000 A	10,000 A

NEMA Receptacle Configurations

Straight-Blade Receptacles

Phase	Voltage	Configuration	15 A	20 A	30 A	50 A	60 A
Single	125 V	Two-pole, three-wire, grounded	5–15R ③	5–20R ③	5–30R	—	—
	250 V	Two-pole, three-wire, grounded	6–15R ③	6–20R ③	6–30R	—	—
	277 V	Two-pole, three-wire, grounded	7–15R	7–20R	—	—	—
Three	250 V	Three-pole, four-wire, grounded	15–15R	15–20R	15–30R	—	—

Twist-Lock Receptacles

Phase	Voltage	Configuration	15 A	20 A	30 A	50 A	60 A
Single	125 V	Two-pole, three-wire, grounded	L5–15R ③	L5–20R	L5–30R	CS6360 ④	—
	250 V	Two-pole, three-wire, grounded	L6–15R ③	L6–20R	L6–30R	CS8264 ④	—
	277 V	Two-pole, three-wire, grounded	L7-15R	L7–20R	L7–30R	—	—
	480 V	Two-pole, three-wire, grounded	—	L8–20R	L8–30R	—	—
Three	250 V	Three-pole, four-wire, grounded	—	L15–20R	L15–30R	CS8364 ④	—
	208/120 V	Three-pole, five-wire, grounded	—	L21–20R	L21–30R	—	—
	480/277 V	Three-pole, five-wire, grounded	—	L22–20R	L22–30R	—	—

Pin and Sleeve Connectors (UL and IEC 309)

Phase	Voltage	Configuration	15 A	20 A	30 A	50 A	60 A
Single	125 V	Two-pole, three-wire, grounded	—	P5–20C	P5–30C	—	P5–60C
	250 V	Two-pole, three-wire, grounded	—	P6–20C	P6–30C	—	P6–60C
	277 V	Two-pole, three-wire, grounded	—	P7–20C	P7–30C	—	P7–60C
Three-	250 V	Three-pole, four-wire, grounded	—	P15–20C	P15–30C	—	P15–60C
	208/120 V	Three-pole, five-wire, grounded	—	P21–20C	P21–30C	—	P21–60C
	480/277 V	Three-pole, five-wire, grounded	—	P22–20C	P22–30C	—	P22–60C

Notes

① 25 kAIC is available for single-phase connectors at 240 V.
② The short-circuit rating of the plug-in unit will match that of the busway that it is installed.
③ Available in a duplex configuration.
④ California standard receptacles.

For other receptacle options, contact the factory.
480/277 V receptacles may be applied at 400/230 V.

Approximate Dimensions in Inches (mm)

Plug-In Units—Physical Data

Bus Plugs

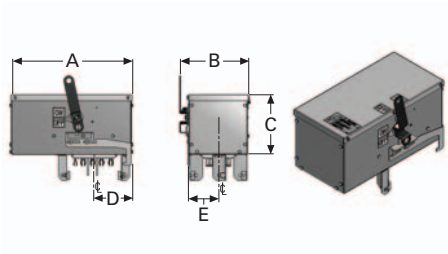

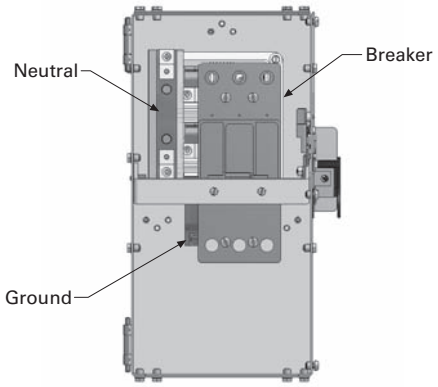

Breaker Plug-In Unit Dimensions

Plug-In Unit	Maximum Amperes	Maximum Voltage	A	B	C	D	E
LABFD (F-Frame)	225	600	18.00 (457.2)	10.80 (274.3)	8.17 (207.5)	5.97 (151.6)	4.80 (121.9)
LABJD (J-Frame)	250	600	18.56 (471.4)	10.80 (274.3)	9.08 (230.6)	5.97 (151.6)	4.61 (117.1)

Breaker Plug-In Unit Physical Data

Plug-In Unit	Mechanical Terminals	Approximate Weight Lb
LABFD (F-Frame)	Cu/Al-(1)#4–4/0	25
LABJD (J-Frame)	Cu/Al-(1)#14–350 kcmil	40

Bus Plug Receptacle

Contents

Description	*Page*
100 A Busway	
Options and Accessories	**V2-T6-47**
Technical Data and Specifications	**V2-T6-48**

100 A Busway

Product Description

Plug-In Busway

- 100 A copper
- Straight sections of plug-in busway
- Three-phase, three-wire; three-phase, four-wire; and single-phase, three-wire applications

Application Description

Eaton 100 A busway is an alternative to cable in supplying small blocks of power for the normal commercial and industrial power systems. 100 A busway is practical for small shops, laboratories, classrooms and light manufacturing.

Product Selection

Busway

Description	Three-Phase, Three-Wire 600 V Maximum Catalog Number	Three-Phase, Four-Wire FN 277/480 V Catalog Number	Single-Phase, Three-Wire 120/240 V Catalog Number
Copper (Includes 50% Internal Ground Bar)			
10 ft (3 m)	**CST13G**	**CST14G**	**CST13NG**
5 ft (1.5 m)	**CST135G**	**CST145G**	**CST13N5G**
3 ft (0.9 m)	**CST133G**	**CST143G**	**CST13N3G**
2 ft (0.6 m)	**CST132G**	**CST142G**	**CST13N2G**
1 ft (0.3 m)	**CST131G**	**CST141G**	**CST13N1G**
Elbows 10 x 10 in (254.0 x 254.0 mm)			
Forward	**CFE13G**	**CFE14G**	**CFE13NG**
Rearward	**CRE13G**	**CRE14G**	**CRE13NG**
Upward	**CUE13G**	**CUE14G**	**CUE13NG**
Downward	**CDE13G**	**CDE14G**	**CDE13NG**

Cable Tap Boxes

Type	Three- or Four-Wire Catalog Number	Ground (If Required) Catalog Number
Plug-in	**PIB14**	**PIGS100**
End (R or L)	**EB14**	**GL100**
Center	**CBIB14G**	**Included**

Fusible Plug-In Units

Voltage Rating	Ampere Rating	Fusible Enclosure Catalog Number	Ground (If Required) Catalog Number
240	30	**FAN321**	**PIGS100**
240	60	**FAN322**	**PIGS100**
240	100	**FAN323**	**PIGS100**
600	30	**FAN361**	**PIGS100**
600	60	**FAN362**	**PIGS100**
600	100	**FAN363**	**PIGS100**

Circuit Breakers for Plug-In Units

Breaker Frame	Ampere Rating	Circuit Breaker Enclosure Catalog Number	Receptacle Enclosure Catalog Number	Ground (If Required) Catalog Number	External Handle (Required for Hook-Stick Operation) Catalog Number
QUICKLAG, HQP	15–50	**PINQP**	**LCNQP**	**PIGS100**	**HMQP**
FD, EHD, FDB	15–100	**PINFD**	**LCNFD**	**PIGS100**	**HMFD**

Options and Accessories

100A Busway Plug-In Units

Plug-in units for 100 A busway are available with or without overcurrent protection. All plug-in units include a neutral stab and are suitable for three-phase, three-wire, and three-phase, four-wire applications.

The PINQP circuit breaker enclosures and the LCNQP and LCNFD receptacle enclosures are all suitable for single-phase, three-wire applications. Ground stabs are available for field installation.

Fusible Units

Fusible units are available for 30, 60 and 100 A service for 240 or 600 V.

Circuit Breaker Units

If you are using circuit breaker units, the load must be distributed evenly among A, B and C phases. To accomplish this, distribute the load evenly among single-, two- and three-pole breakers. Available are QUICKLAG®"HQP" circuit breaker units for 50A–240V maximum service, "EHD, FDB and FD" circuit breakers for 100 A to 600 V maximum service.

External Handle Operating Mechanism

An external operating mechanism is attached on top of the breaker switch for hookstick or chain operation. This is available for all circuit breakers.

Receptacle Enclosures

The receptacle enclosures (loadcenters) include space for three breaker poles and provisions for one, two or three conventional, single-gang outlets, and blank covers to fill unused spaces. Include neutral stab. Do not include breakers, outlets or wiring.

The enclosure, circuit breaker (if required) and ground are ordered separately and shipped unassembled. If the unit is to be factory assembled, please indicate on the order, add 15% to the total price, and allow additional time for shipment. For circuit breaker selection, see **Page V2-T6-22.**

Accessories

Item	Catalog Number
End closer	**EC1**
Outlet cover	**OC1**
Edgewise hanger	**EH1**
"C" clamp hanger	**FH1**
Slip-on wall flange	**WF1**

Note

The above items can be used with or without ground, three-wire or four-wire.

Accessories

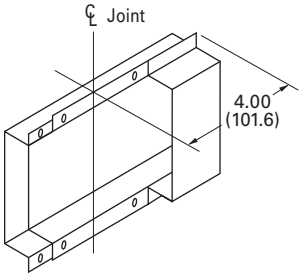

End Closers—EC1

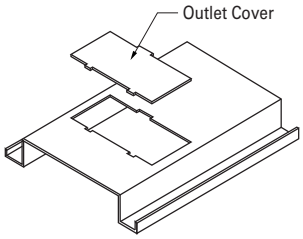

Replacement Outlet Cover—OC1

Hangers

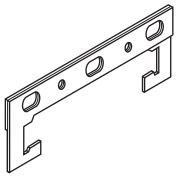

"C" Clamp—FH1

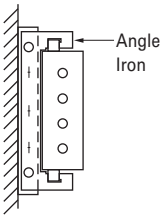

Wall Mounted

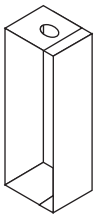

Edgewise—EH1

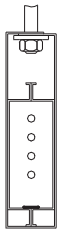

Edge Mounted

Technical Data and Specifications

Electrical conductors are silver-plated round copper rods. A 50% internal ground bar is supplied as standard. Busway with ground will match existing busway without ground. The housing is formed from two channels of 20-gauge steel riveted together in a solid assembly and painted ANSI 6.1.

Conductor joints are made by means of boltless pressure clips that require no assembly or adjustment by the installer. The busbars are firmly supported by molded insulators on the alternate side of the busway.

100 A Busway and Fittings

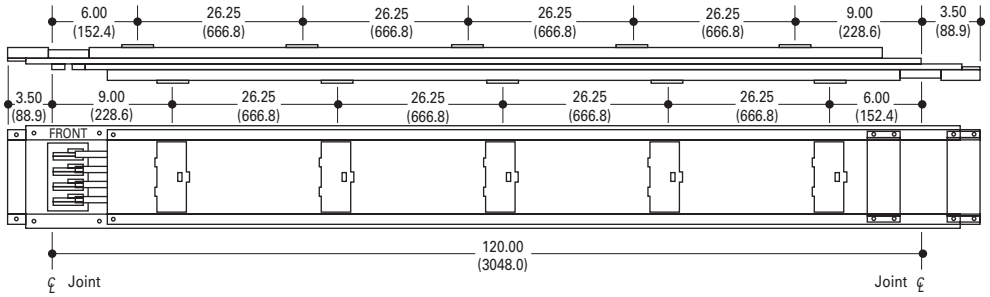

Typical 100 A Busway, Straight Length

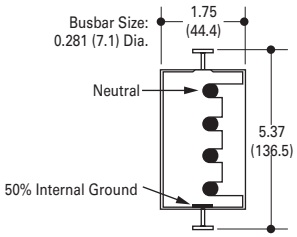

Typical Cross-Section

10.00 (254.0) x 10.00 (254.0)

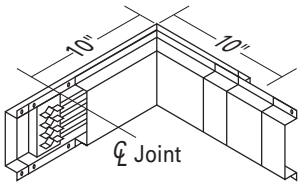

Forward Elbow

10.00 (254.0) x 10.00 (254.0)

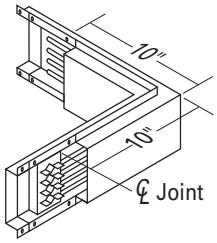

Rearward Elbow

10.00 (254.0) x 10.00 (254.0)

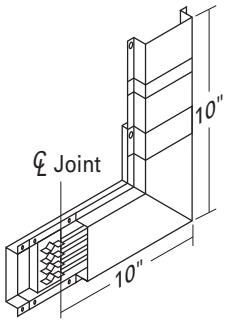

Upward Elbow

10.00 (254.0) x 10.00 (254.0)

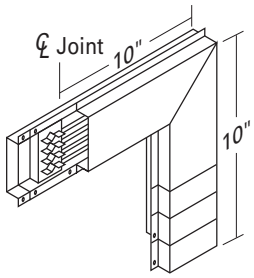

Downward Elbow

Effective Date: November 1, 2008

Eaton Terms & Conditions

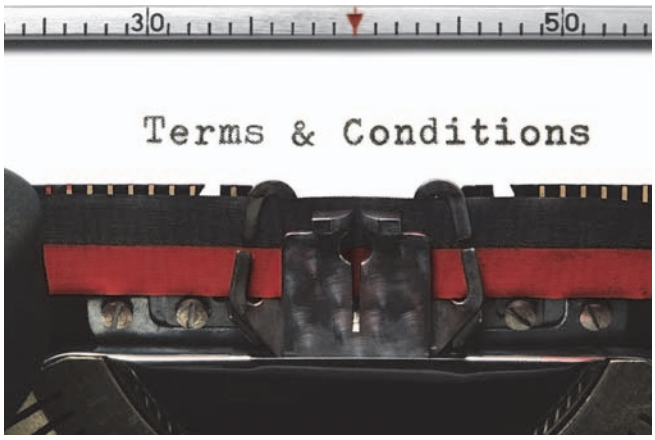

Contents

Description	*Page*
Terms and Conditions of Sale	**V2-A1-1**
Terms of Payment	**V2-A1-2**
Freight	**V2-A1-3**
Warranty	**V2-A1-3**

Selling Policy (Supersedes Selling Policy 25-000, dated February 20, 2006)

Terms and Conditions of Sale

The Terms and Conditions of Sale set forth herein, and any supplements which may be attached hereto, constitute the full and final expression of the contract for the sale of products or services (hereinafter referred to as Product(s) or Services by Eaton Corporation (hereinafter referred to as Seller) to the Buyer, and supersedes all prior quotations, purchase orders, correspondence or communications whether written or oral between the Seller and the Buyer. Notwithstanding any contrary language in the Buyer's purchase order, correspondence or other form of acknowledgment, Buyer shall be bound by these Terms and Conditions of Sale when it sends a purchase order or otherwise indicates acceptance of this contract, or when it accepts delivery from Seller of the Products or Services.

THE CONTRACT FOR SALE OF THE PRODUCTS OR SERVICES IS EXPRESSLY LIMITED TO THE TERMS AND CONDITIONS OF SALE STATED HEREIN. ANY ADDITIONAL OR DIFFERENT TERMS PROPOSED BY BUYER ARE REJECTED UNLESS EXPRESSLY AGREED TO IN WRITING BY SELLER. No contract shall exist except as herein provided.

Complete Agreement

No amendment or modification hereto nor any statement, representation or warranty not contained herein shall be binding on the Seller unless made in writing by an authorized representative of the Seller. Prior dealings, usage of the trade or a course of performance shall not be relevant to determine the meaning of this contract even though the accepting or acquiescing party had knowledge of the nature of the performance and opportunity for objection.

Quotations

Written quotations are valid for 30 days from its date unless otherwise stated in the quotation or terminated sooner by notice.

Verbal quotations, unless accepted, expire the same day they are made.

A complete signed order must be received by Seller within 20 calendar days of notification of award, otherwise the price and shipment will be subject to re-negotiation.

Termination and Cancellation

Any order may be terminated by the Buyer only by written notice and upon payment of reasonable termination charges, including all costs plus profit.

Seller shall have the right to cancel any order at any time by written notice if Buyer breaches any of the terms hereof, becomes the subject of any proceeding under state or federal law for the relief of debtors, or otherwise becomes insolvent or bankrupt, generally does not pay its debts as they become due or makes an assignment for the benefit of creditors.

Effective Date: November 1, 2008

Prices

All prices are subject to change without notice. In the event of a price change, the effective date of the change will be the date of the new price or discount sheet, letter or telegram. All quotations made or orders accepted after the effective date will be on the new basis. For existing orders, the price of the unshipped portion of an order will be the price in effect at time of shipment.

Price Policy—Products and Services

When prices are quoted as firm for quoted shipment, they are firm provided the following conditions are met:

1. The order is released with complete engineering details.
2. Shipment of Products are made, and Services purchased are provided within the quoted lead time.
3. When drawings for approval are required for any Products, the drawings applicable to those Products must be returned within 30* calendar days from the date of the original mailing of the drawings by Seller. The return drawings must be released for manufacture and shipment and must be marked "APPROVED" or "APPROVED AS NOTED." Drawing re-submittals which are required for any other reason than to correct Seller errors will not extend the 30-day period.

   * 60 days for orders through contractors to allow time for their review and approval before and after transmitting them to their customers.

If the Buyer initiates or in any way causes delays in shipment, provision of Services or return of approval drawings beyond the periods stated above, the price of the Products or Services will be increased 1% per month or fraction thereof up to a maximum of 18 months from the date of the Buyer's order. For delays resulting in shipment or provision of Services beyond 18 months from the date of the Buyer's order, the price must be renegotiated.

Price Policy—BLS

Refer to Price Policy 25-050.

Minimum Billing

Orders less than $1,000 will be assessed a shipping and handling charge of 5% of the price of the order, with a minimum charge of $25.00 unless noted differently on Product discount sheets.

Taxes

The price does not include any taxes. Buyer shall be responsible for the payment of all taxes applicable to, or arising from the transaction, the Products, its sale, value, or use, or any Services performed in connection therewith regardless of the person or entity actually taxed.

Terms of Payment

Products

Acceptance of all orders is subject to the Buyer meeting Seller's credit requirements. Terms of payment are subject to change for failure to meet such requirements. Seller reserves the right at any time to demand full or partial payment before proceeding with a contract of sale as a result of changes in the financial condition of the Buyer. Terms of Payment are either Net 30 days from the date of invoice of each shipment or carry a cash discount based on Product type. Specific payment terms for Products are outlined in the applicable Product discount schedules.

Services

Terms of payment are net within 30 days from date of invoice for orders amounting to less than $50,000.00.

Terms of payment for orders exceeding $50,000.00 shall be made according to the following:

1. Twenty percent (20%) of order value with the purchase order payable 30 days from date of invoice.
2. Eighty percent (80%) of order value in equal monthly payments over the performance period payable 30 days from date of invoice.

Except for work performed (i) under a firm fixed price basis or (ii) pursuant to terms of a previously priced existing contract between Seller and Buyer, invoices for work performed by Seller shall have added and noted on each invoice a charge of 3% (over and above the price of the work) which is related to Seller compliance with present and proposed environmental, health, and safety regulations associated with prescribed requirements covering hazardous materials management and employee training, communications, personal protective equipment, documentation and record keeping associated therewith.

Adequate Assurances

If, in the judgment of Seller, the financial condition of the Buyer, at any time during the period of the contract, does not justify the terms of payment specified, Seller may require full or partial payment in advance.

Delayed Payment

If payments are not made in accordance with these terms, a service charge will, without prejudice to the right of Seller to immediate payment, be added in an amount equal to the lower of 1.5% per month or fraction thereof or the highest legal rate on the unpaid balance.

Freight

Freight policy will be listed on the Product discount sheets, or at option of Seller one of the following freight terms will be quoted.

F.O.B.—P/S—Frt./Ppd. and Invoiced

Products are sold F.O.B. point of shipment freight prepaid and invoiced to the Buyer.

F.O.B.—P/S—Frt./Ppd. and Allowed

Products sold are delivered F.O.B. point of shipment, freight prepaid and included in the price.

F.O.B. Destination—Frt./Ppd. and Allowed

At Buyer's option, Seller will deliver the Products F.O.B. destination freight prepaid and 2% will be added to the net price.

The term "freight prepaid" means that freight charges will be prepaid to the accessible common carrier delivery point nearest the destination for shipments within the United States and Puerto Rico unless noted differently on the Product discount sheets. For any other destination contact Seller's representative.

Shipment and Routing

Seller shall select the point of origin of shipment, the method of transportation, the type of carrier equipment and the routing of the shipment.

If the Buyer specifies a special method of transportation, type of carrier equipment, routing, or delivery requirement, Buyer shall pay all special freight and handling charges.

When freight is included in the price, no allowance will be made in lieu of transportation if the Buyer accepts shipment at factory, warehouse, or freight station or otherwise supplies its own transportation.

Risk of Loss

Risk of loss or damage to the Products shall pass to Buyer at the F.O.B. point.

Concealed Damage

Except in the event of F.O.B. destination shipments, Seller will not participate in any settlement of claims for concealed damage.

When shipment has been made on an F.O.B. destination basis, the Buyer must unpack immediately and, if damage is discovered must:

1. Not move the Products from the point of examination.
2. Retain shipping container and packing material.
3. Notify the carrier in writing of any apparent damage.
4. Notify Seller representative within 72 hours of delivery.
5. Send Seller a copy of the carrier's inspection report.

Witness Tests/Customer Inspection

Standard factory tests may be witnessed by the Buyer at Seller's factory for an additional charge calculated at the rate of $2,500 per day (not to exceed eight (8) hours) per Product type. Buyer may final inspect Products at the Seller's factory for $500 per day per Product type.

Witness tests will add one (1) week to the scheduled shipping date. Seller will notify Buyer fourteen (14) calendar days prior to scheduled witness testing or inspection. In the event Buyer is unable to attend, the Parties shall mutually agree on a rescheduled date. However, Seller reserves the right to deem the witness tests waived with the right to ship and invoice Products.

Held Orders

For any order held, delayed or rescheduled at the request of the Buyer, Seller may, at its sole option (1) require payment to be based on any reasonable basis, including but not limited to the contract price, and any additional expenses, or cost resulting from such a delay; (2) store Products at the sole cost and risk of loss of the Buyer; and/or (3) charge to the Buyer those prices under the applicable price policy. Payment for such price, expenses and costs, in any such event, shall be due by Buyer within thirty (30) days from date of Seller's invoice. Any order so held delayed or rescheduled beyond six (6) months will be treated as a Buyer termination.

Drawing Approval

Seller will design the Products in line with, in Seller's judgment, good commercial practice. If at drawing approval Buyer makes changes outside of the design as covered in their specifications, Seller will then be paid reasonable charges and allowed a commensurate delay in shipping date based on the changes made.

Drawing Re-Submittal

When Seller agrees to do so in its quotation, Seller shall provide Buyer with the first set of factory customer approval drawing(s) at Seller's expense. The customer approval drawing(s) will be delivered at the quoted delivery date. If Buyer requests drawing changes or additions after the initial factory customer approval drawing(s) have been submitted by Seller, the Seller, at its option, may assess Buyer drawing charges. Factory customer approval drawing changes required due to misinterpretation by Seller will be at Seller's expense. Approval drawings generated by Bid Manager are excluded from this provision.

Warranty

Warranty for Products

Seller warrants that the Products manufactured by it will conform to Seller's applicable specifications and be free from failure due to defects in workmanship and material for one (1) year from the date of installation of the Product or eighteen (18) months from the date of shipment of the Product, whichever occurs first.

In the event any Product fails to comply with the foregoing warranty Seller will, at its option, either (a) repair or replace the defective Product, or defective part or component thereof, F.O.B. Seller's facility freight prepaid, or (b) credit Buyer for the purchase price of the Product. All warranty claims shall be made in writing.

Seller requires all non-conforming Products be returned at Seller's expense for evaluation unless specifically stated otherwise in writing by Seller.

This warranty does not cover failure or damage due to storage, installation, operation or maintenance not in conformance with Seller's recommendations and industry standard practice or due to accident, misuse, abuse or negligence. This warranty does not cover reimbursement for labor, gaining access, removal, installation, temporary power or any other expenses, which may be incurred in connection with repair or replacement.

This warranty does not apply to equipment not manufactured by Seller. Seller limits itself to extending the same warranty it receives from the supplier.

Effective Date: November 1, 2008

Extended Warranty for Products

If requested by the Buyer and specifically accepted in writing by Seller, the foregoing standard warranty for Products will be extended from the date of shipment for the period and price indicated below:

- 24 months—2% of Contract Price
- 30 months—3% of Contract Price
- 36 months—4% of Contract Price

Special Warranty (In and Out) for Products

If requested by the Buyer and specifically accepted in writing by Seller, Seller will, during the warranty period for Products, at an additional cost of 2% of the contract price, be responsible for the direct cost of:

1. Removing the Product from the installed location.
2. Transportation to the repair facility and return to the site.
3. Reinstallation on site.

The total liability of Seller for this Special Warranty for Products is limited to 50% of the contract price of the particular Product being repaired and excludes expenses for removing adjacent apparatus, walls, piping, structures, temporary service, etc.

Warranty for Services

Seller warrants that the Services performed by it hereunder will be performed in accordance with generally accepted professional standards.

The Services, which do not so conform, shall be corrected by Seller upon notification in writing by the Buyer within one (1) year after completion of the Services.

Unless otherwise agreed to in writing by Seller, Seller assumes no responsibility with respect to the suitability of the Buyer's, or its customer's, equipment or with respect to any latent defects in equipment not supplied by Seller. This warranty does not cover damage to Buyer's, or its customer's, equipment, components or parts resulting in whole or in part from improper maintenance or operation or from their deteriorated condition. Buyer will, at its cost, provide Seller with unobstructed access to the defective Services, as well as adequate free working space in the immediate vicinity of the defective Services and such facilities and systems, including, without limitation, docks, cranes and utility disconnects and connects, as may be necessary in order that Seller may perform its warranty obligations. The conducting of any tests shall be mutually agreed upon and Seller shall be notified of, and may be present at, all tests that may be made.

Warranty for Power Systems Studies

Seller warrants that any power systems studies performed by it will conform to generally accepted professional standards. Any portion of the study, which does not so conform, shall be corrected by Seller upon notification in writing by the Buyer within six (6) months after completion of the study. All warranty work shall be performed in a single shift straight time basis Monday through Friday. In the event that the study requires correction of warranty items on an overtime schedule, the premium portion of such overtime shall be for the Buyer's account.

Limitation on Warranties for Products, Services and Power Systems Studies

THE FOREGOING WARRANTIES ARE EXCLUSIVE EXCEPT FOR WARRANTY OF TITLE. SELLER DISCLAIMS ALL OTHER WARRANTIES INCLUDING ANY IMPLIED WARRANTIES OF MERCHANTABILITY AND FITNESS FOR A PARTICULAR PURPOSE.

CORRECTION OF NON-CONFORMITIES IN THE MANNER AND FOR THE PERIOD OF TIME PROVIDED ABOVE SHALL CONSTITUTE SELLER'S SOLE LIABILITY AND BUYER'S EXCLUSIVE REMEDY FOR FAILURE OF SELLER TO MEET ITS WARRANTY OBLIGATIONS, WHETHER CLAIMS OF THE BUYER ARE BASED IN CONTRACT, IN TORT (INCLUDING NEGLIGENCE OR STRICT LIABILITY), OR OTHERWISE.

Asbestos

Federal Law requires that building or facility owners identify the presence, location and quantity of asbestos containing material (hereinafter "ACM") at work sites. Seller is not licensed to abate ACM. Accordingly, for any contract which includes the provision of Services, prior to (i) commencement of work at any site under a specific Purchase Order, (ii) a change in the work scope of any Purchase Order, the Buyer will certify that the work area associated with the Seller's scope of work includes the handling of Class II ACM, including but not limited to generator wedges and high temperature gaskets which include asbestos materials. The Buyer shall, at its expense, conduct abatement should the removal, handling, modification or reinstallation, or some or all of them, of said Class II ACM be likely to generate airborne asbestos fibers; and should such abatement affect the cost of or time of performance of the work then Seller shall be entitled to an equitable adjustment in the schedule, price and other pertinent affected provisions of the contract.

Compliance with Nuclear Regulation

Seller's Products are sold as commercial grade Products not intended for application in facilities or activities licensed by the United States Nuclear Regulatory Commission for atomic purposes. Further certification will be required for use of the Products in any safety-related application in any nuclear facility licensed by the U.S. Nuclear Regulatory Commission.

Returning Products

Authorization and shipping instructions for the return of any Products must be obtained from Seller before returning the Products.

When return is occasioned due to Seller error, full credit including all transportation charges will be allowed.

Product Notices

Buyer shall provide the user (including its employees) of the Products with all Seller supplied Product notices, warnings, instructions, recommendations, and similar materials.

Force Majeure

Seller shall not be liable for failure to perform or delay in performance due to fire, flood, strike or other labor difficulty, act of God, act of any governmental authority or of the Buyer, riot, embargo, fuel or energy shortage, car shortage, wrecks or delays in transportation, or due to any other cause beyond Seller's reasonable control. In the event of delay in performance due to any such cause, the date of delivery or time for completion will be extended by a period of time reasonably necessary to overcome the effect of such delay.

Liquidated Damages

Contracts which include liquidated damage clauses for failure to meet shipping or job completion promises are not acceptable or binding on Seller, unless such clauses are specifically accepted in writing by an authorized representative of the Seller at its headquarters office.

Patent Infringement

Seller will defend or, at its option, settle any suit or proceeding brought against Buyer, or Buyer's customers, to the extent it is based upon a claim that any Product or part thereof, manufactured by Seller or its subsidiaries and furnished hereunder, infringes any United States patent, other than a claim of infringement based upon use of a Product or part thereof in a process, provided Seller is notified in reasonable time and given authority, information and assistance (at Seller's expense) for the defense of same. Seller shall pay all legal and court costs and expenses and court-assessed damages awarded therein against Buyer resulting from or incident to such suit or proceeding. In addition to the foregoing, if at any time Seller determines there is a substantial question of infringement of any United States patent, and the use of such Product is or may be enjoined, Seller may, at its option and expense: either (a) procure for Buyer the right to continue using and selling the Product; (b) replace the Product with non-infringing apparatus; (c) modify the Product so it becomes non-infringing; or (d) as a last resort, remove the Product and refund the purchase price, equitably adjusted for use and obsolescence. In no case does Seller agree to pay any recovery based upon its Buyer's savings or profit through use of Seller's Products whether the use be special or ordinary. The foregoing states the entire liability of Seller for patent infringement.

The preceding paragraph does not apply to any claim of infringement based upon: (a) any modification made to a Product other than by Seller; (b) any design and/or specifications of Buyer to which a Product was manufactured; or (c) the use or combination of Product with other products where the Product does not itself infringe. As to the above-identified claim situations where the preceding paragraph does not apply, Buyer shall defend and hold Seller harmless in the same manner and to the extent as Seller's obligations described in the preceding paragraph. Buyer shall be responsible for obtaining (at Buyer's expense) all license rights required for Seller to be able to use software products in the possession of Buyer where such use is required in order to perform any Service for Buyer.

With respect to a Product or part thereof not manufactured by Seller or its subsidiaries, Seller will attempt to obtain for Buyer, from the supplier(s), the patent indemnification protection normally provided by the supplier(s) to customers.

Limitation of Liability

THE REMEDIES OF THE BUYER SET FORTH IN THIS CONTRACT ARE EXCLUSIVE AND ARE ITS SOLE REMEDIES FOR ANY FAILURE OF SELLER TO COMPLY WITH ITS OBLIGATIONS HEREUNDER.

NOTWITHSTANDING ANY PROVISION IN THIS CONTRACT TO THE CONTRARY, IN NO EVENT SHALL SELLER BE LIABLE IN CONTRACT, IN TORT (INCLUDING NEGLIGENCE OR STRICT LIABILITY) OR OTHERWISE FOR DAMAGE TO PROPERTY OR EQUIPMENT OTHER THAN PRODUCTS SOLD HEREUNDER, LOSS OF PROFITS OR REVENUE, LOSS OF USE OF PRODUCTS, COST OF

CAPITAL, CLAIMS OF CUSTOMERS OF THE BUYER OR ANY SPECIAL, INDIRECT, INCIDENTAL OR CONSEQUENTIAL DAMAGES WHATSOEVER, REGARDLESS OF WHETHER SUCH POTENTIAL DAMAGES ARE FORESEEABLE OR IF SELLER HAS BEEN ADVISED OF THE POSSIBILITY OF SUCH DAMAGES.

THE TOTAL CUMULATIVE LIABILITY OF SELLER ARISING FROM OR RELATED TO THIS CONTRACT WHETHER THE CLAIMS ARE BASED IN CONTRACT, IN TORT (INCLUDING NEGLIGENCE OR STRICT LIABILITY) OR OTHERWISE, SHALL NOT EXCEED THE PRICE OF THE PRODUCT OR SERVICES ON WHICH SUCH LIABILITY IS BASED.

A

ACP V2-**T1**-60
AC1 . . . . . V2-**T1**-123
AC2 . . . . . V2-**T1**-123
APJ V2-**T1**-60

B

BAB V2-**T4**-19
BABR. V2-**T3**-115, V2-**T3**-116
BX V2-**T3**-71, V2-**T3**-74, V2-**T3**-81, V2-**T3**-129
B48M V2-**T2**-64, V2-**T2**-69

C

CBI V2-**T6**-46
CDE V2-**T6**-46
CFE V2-**T6**-46
CRE V2-**T6**-46
CST V2-**T6**-46
CTK V2-**T6**-16
CTXB V2-**T3**-35, V2-**T3**-47
CUE V2-**T6**-46
CUK V2-**T4**-19
C361 . . . . . V2-**T1**-99, V2-**T1**-100, V2-**T1**-102
C371 . . . . . V2-**T1**-100

D

DBK V2-**T4**-19
DG V2-**T1**-5
DG0 . . . . . V2-**T1**-14
DG1 . . . . . V2-**T1**-14
DG2 . . . . . V2-**T1**-5, V2-**T1**-14, V2-**T1**-28, V2-**T1**-29
DG3 . . . . . V2-**T1**-5, V2-**T1**-29
DH V2-**T1**-6–V2-**T1**-10, V2-**T1**-33–V2-**T1**-41
DH03 . . . . . V2-**T1**-14
DH1 . . . . . V2-**T1**-14, V2-**T1**-111
DH16 . . . . . V2-**T1**-71
DH2 . . . . . V2-**T1**-14, V2-**T1**-35
DH22 . . . . . V2-**T1**-6, V2-**T1**-7, V2-**T1**-33–V2-**T1**-35, V2-**T1**-54, V2-**T1**-73
DH26 . . . . . V2-**T1**-8–V2-**T1**-10, V2-**T1**-36–V2-**T1**-40, V2-**T1**-55, V2-**T1**-74, V2-**T1**-77
DH3 . . . . . V2-**T1**-7, V2-**T1**-35
DH32 . . . . . V2-**T1**-6, V2-**T1**-7, V2-**T1**-18, V2-**T1**-33–V2-**T1**-35, V2-**T1**-54, V2-**T1**-57, V2-**T1**-58, V2-**T1**-62, V2-**T1**-73, V2-**T1**-77, V2-**T1**-84, V2-**T1**-85
DH36 . . . . . V2-**T1**-6–V2-**T1**-8, V2-**T1**-9, V2-**T1**-10, V2-**T1**-18, V2-**T1**-36–V2-**T1**-40, V2-**T1**-55, V2-**T1**-57, V2-**T1**-58, V2-**T1**-60, V2-**T1**-62, V2-**T1**-74, V2-**T1**-75, V2-**T1**-77, V2-**T1**-79, V2-**T1**-80, V2-**T1**-84, V2-**T1**-85
DH42 . . . . . V2-**T1**-6, V2-**T1**-7, V2-**T1**-33, V2-**T1**-34
DH46 . . . . . V2-**T1**-8, V2-**T1**-9, V2-**T1**-10, V2-**T1**-36–V2-**T1**-40, V2-**T1**-75, V2-**T1**-79
DH66 . . . . . V2-**T1**-10, V2-**T1**-44
DH8 . . . . . V2-**T1**-14
DKD V2-**T1**-109
DP V2-**T1**-5, V2-**T1**-28
DS V2-**T1**-14, V2-**T1**-92, V2-**T1**-100, V2-**T1**-103
DS0 . . . . . V2-**T1**-15, V2-**T1**-111
DS1 . . . . . V2-**T1**-14, V2-**T1**-15, V2-**T1**-60, V2-**T1**-111
DS2 . . . . . V2-**T1**-14, V2-**T1**-15, V2-**T1**-111
DS3 . . . . . V2-**T1**-14, V2-**T1**-15, V2-**T1**-60, V2-**T1**-67, V2-**T1**-111
DS36 . . . . . V2-**T1**-67
DS4 . . . . . V2-**T1**-14, V2-**T1**-15
DS5 . . . . . V2-**T1**-14, V2-**T1**-15
DS6 . . . . . V2-**T1**-14, V2-**T1**-60
DS7 . . . . . V2-**T1**-14
DS8 . . . . . V2-**T1**-14, V2-**T1**-111
DS9 . . . . . V2-**T1**-15, V2-**T1**-111
DT V2-**T1**-11–V2-**T1**-12
DT1 . . . . . V2-**T1**-14
DT2 . . . . . V2-**T1**-11, V2-**T1**-12, V2-**T1**-14, V2-**T1**-49
DT22 . . . . . V2-**T1**-47, V2-**T1**-48
DT26 . . . . . V2-**T1**-49
DT3 . . . . . V2-**T1**-11–V2-**T1**-12, V2-**T1**-49
DT32 . . . . . V2-**T1**-48
DT36 . . . . . V2-**T1**-49
DT4 . . . . . V2-**T1**-11, V2-**T1**-12, V2-**T1**-14
DT46 . . . . . V2-**T1**-50
DT6 . . . . . V2-**T1**-12, V2-**T1**-14
DT66 . . . . . V2-**T1**-50
DT8 . . . . . V2-**T1**-14

E

EB V2-**T6**-46
EC V2-**T6**-47
ED V2-**T4**-19
EH V2-**T6**-47
EHD3 . . . . . V2-**T1**-106
ER V2-**T1**-123
EXT V2-**T2**-191
EZB2 . . . . . V2-**T3**-6, V2-**T3**-29, V2-**T3**-33, V2-**T3**-41, V2-**T3**-45, V2-**T3**-61, V2-**T3**-65
EZTV V2-**T3**-6
EZT2. . . . . V2-**T3**-6, V2-**T3**-29, V2-**T3**-33, V2-**T3**-41, V2-**T3**-45, V2-**T3**-61, V2-**T3**-65

F

FAN V2-**T6**-47
FD V2-**T1**-106, V2-**T4**-19
FFD V2-**T1**-106, V2-**T1**-108, V2-**T1**-109
FH V2-**T6**-47
FJD V2-**T1**-106, V2-**T1**-108
FKD V2-**T1**-107, V2-**T1**-108, V2-**T1**-109

G

GHB V2-**T4**-19
GHC V2-**T1**-106
GHQR V2-**T3**-114, V2-**T3**-115, V2-**T3**-116
GL V2-**T6**-46
GTB V2-**T4**-22–V2-**T4**-34
G48M. V2-**T2**-55, V2-**T2**-59

H

HKD V2-**T4**-19
HM V2-**T6**-47
HT20P V2-**T2**-52, V2-**T2**-56
H48M V2-**T2**-53, V2-**T2**-57

I

INK V2-**T1**-111
IST V2-**T4**-19

J

JDB V2-**T1**-106
JFD V2-**T1**-106, V2-**T1**-108, V2-**T1**-109
JGD V2-**T1**-106, V2-**T1**-108
JJD V2-**T1**-106, V2-**T1**-108
JKD V2-**T1**-107, V2-**T1**-108, V2-**T1**-109
JLD V2-**T1**-107, V2-**T1**-108
JLG V2-**T1**-109
JND V2-**T1**-107, V2-**T1**-108, V2-**T1**-109

K

KD V2-**T4**-19
KDB V2-**T1**-107

L

LCN V2-**T6**-47
LDB V2-**T1**-107
LKS V2-**T2**-192
LL4 . . . . . V2-**T4**-18
LL8 . . . . . V2-**T4**-18
LSS V2-**T4**-18
LTC9 . . . . . V2-**T3**-37, V2-**T3**-49
LTV2 . . . . . V2-**T3**-6, V2-**T3**-61
LT20 . . . . . V2-**T3**-6, V2-**T3**-29, V2-**T3**-33, V2-**T3**-41, V2-**T3**-45, V2-**T3**-61, V2-**T3**-65
LY48D V2-**T2**-137
LY48G V2-**T2**-137
LY48M V2-**T2**-137

M

M V2-**T4**-19
MBB V2-**T4**-17, V2-**T4**-18
MD V2-**T2**-112–V2-**T2**-117, V2-**T4**-19
MDL V2-**T1**-107
MSB V2-**T4**-17
MV24M V2-**T2**-139
MV24R V2-**T2**-139
MV29M V2-**T2**-138, V2-**T2**-139
MV29R V2-**T2**-139
MV44M V2-**T2**-140
MV48D V2-**T2**-138
MV48M V2-**T2**-137, V2-**T2**-138, V2-**T2**-140, V2-**T2**-141
MV60M V2-**T2**-141, V2-**T2**-142

N

ND3 . . . . . V2-**T1**-107
NT20P V2-**T2**-52, V2-**T2**-56
N48M V2-**T2**-54, V2-**T2**-58, V2-**T2**-65, V2-**T2**-70

O

OC V2-**T6**-47

P

PIB V2-**T6**-46
PIGS V2-**T6**-46, V2-**T6**-47
PIN V2-**T6**-47
PRCB V2-**T3**-122, V2-**T3**-125
PRCD V2-**T3**-117, V2-**T3**-118, V2-**T3**-126
PRCE V2-**T3**-121
PRCL V2-**T3**-119, V2-**T3**-125, V2-**T3**-126
PRCPS V2-**T3**-114
PRCS V2-**T3**-119, V2-**T3**-122, V2-**T3**-126
PRCU V2-**T3**-123, V2-**T3**-125
PRC10 . . . . . V2-**T3**-113
PRC75 . . . . . V2-**T3**-112
P1RB V2-**T3**-52, V2-**T3**-57
P1RD V2-**T3**-57
P1RG V2-**T3**-57
P1RL V2-**T3**-52
P1RN V2-**T3**-57
P2RB V2-**T3**-53
P2RL V2-**T3**-53
P3 . . . . . V2-**T6**-15–V2-**T6**-18
P3B V2-**T6**-15, V2-**T6**-17, V2-**T6**-18
P3F V2-**T6**-15–V2-**T6**-18
P3G V2-**T6**-18
P3J V2-**T6**-15, V2-**T6**-18
P3K V2-**T6**-15, V2-**T6**-18
P3L V2-**T6**-15, V2-**T6**-18
P3M V2-**T6**-15, V2-**T6**-18
P3N V2-**T6**-15, V2-**T6**-18
P3P V2-**T6**-17
P48G V2-**T2**-121, V2-**T2**-122
P60G V2-**T2**-121, V2-**T2**-122

Q

QS20L V2-**T2**-134
QS20N V2-**T2**-134

R

RCN V2-**T1**-109
RFD V2-**T1**-106, V2-**T1**-108, V2-**T1**-109
RFK V2-**T1**-92
RGD V2-**T1**-106, V2-**T1**-108
RJD V2-**T1**-106, V2-**T1**-108
RKD V2-**T1**-107, V2-**T1**-108, V2-**T1**-109
RL V2-**T4**-18
RLD V2-**T1**-107, V2-**T1**-108
RLG V2-**T1**-109
RMB V2-**T4**-17, V2-**T4**-18
RMS V2-**T4**-17
RND V2-**T1**-107, V2-**T1**-108, V2-**T1**-109
RS0 . . . . . V2-**T2**-192
RS1 . . . . . V2-**T2**-192
RTA V2-**T3**-54
RTB V2-**T3**-54
RTC V2-**T3**-54

RTD V2-**T3**-54
RTE V2-**T3**-54
RT12M V2-**T2**-135
RT18P V2-**T2**-136
RT20P V2-**T2**-135
RT27M V2-**T2**-135
RT29M V2-**T2**-135
RT60M V2-**T2**-136
RUG. V2-**T4**-18

S

SCN. V2-**T1**-109
SFD V2-**T1**-106, V2-**T1**-108, V2-**T1**-109
SGD. V2-**T1**-106, V2-**T1**-108
SJD V2-**T1**-106, V2-**T1**-108
SKD V2-**T1**-107, V2-**T1**-108, V2-**T1**-109
SLD V2-**T1**-107, V2-**T1**-108
SLG V2-**T1**-109
SND. V2-**T1**-107, V2-**T1**-108, V2-**T1**-109
S10N V2-**T2**-94, V2-**T2**-98, V2-**T2**-145–V2-**T2**-165
S12N V2-**T2**-98
S20K V2-**T2**-95, V2-**T2**-106
S20L V2-**T2**-95, V2-**T2**-99, V2-**T2**-106
S20N V2-**T2**-95, V2-**T2**-96, V2-**T2**-99, V2-**T2**-106, V2-**T2**-145, V2-**T2**-166–V2-**T2**-170
S24N V2-**T2**-99
S27N V2-**T2**-95, V2-**T2**-99
S29N V2-**T2**-94, V2-**T2**-98
S4P V2-**T1**-123
S40N V2-**T2**-96
S48D V2-**T2**-97
S48G V2-**T2**-97
S48M. V2-**T2**-97
S54N V2-**T2**-96
S60G V2-**T2**-97, V2-**T2**-169, V2-**T2**-170
S60J V2-**T2**-97, V2-**T2**-169, V2-**T2**-170
S60M. V2-**T2**-97
S60N V2-**T2**-169, V2-**T2**-170

T

TS1 . . . . . V2-**T1**-123
TS3 . . . . . V2-**T1**-123
T18P V2-**T2**-5, V2-**T2**-7
T20P V2-**T2**-4, V2-**T2**-6, V2-**T2**-8, V2-**T2**-10, V2-**T2**-125, V2-**T2**-131, V2-**T2**-169, V2-**T2**-170
T27M. V2-**T2**-5, V2-**T2**-6, V2-**T2**-8, V2-**T2**-10
T27R V2-**T2**-5, V2-**T2**-6, V2-**T2**-8, V2-**T2**-10
T29M. V2-**T2**-4, V2-**T2**-6, V2-**T2**-8, V2-**T2**-10
T29R V2-**T2**-4, V2-**T2**-6, V2-**T2**-8, V2-**T2**-10
T42D V2-**T2**-175, V2-**T2**-176
T43P V2-**T2**-9, V2-**T2**-11
T46D V2-**T2**-175, V2-**T2**-176
T48M. V2-**T2**-4, V2-**T2**-6, V2-**T2**-8
T60M. V2-**T2**-5, V2-**T2**-7, V2-**T2**-9, V2-**T2**-11
T60R V2-**T2**-9, V2-**T2**-11

U

UG. V2-**T4**-18
UN V2-**T1**-123

V

V24M. V2-**T2**-14, V2-**T2**-15, V2-**T2**-25, V2-**T2**-26, V2-**T2**-36, V2-**T2**-37, V2-**T2**-44, V2-**T2**-45
V24R V2-**T2**-14, V2-**T2**-15, V2-**T2**-25, V2-**T2**-26, V2-**T2**-36, V2-**T2**-37, V2-**T2**-44, V2-**T2**-45
V29M. V2-**T2**-12, V2-**T2**-13, V2-**T2**-23, V2-**T2**-24, V2-**T2**-34, V2-**T2**-35, V2-**T2**-42, V2-**T2**-43
V29R V2-**T2**-12, V2-**T2**-13, V2-**T2**-23, V2-**T2**-24, V2-**T2**-34, V2-**T2**-35, V2-**T2**-42, V2-**T2**-43
V42D V2-**T2**-177, V2-**T2**-179, V2-**T2**-181, V2-**T2**-183
V44M. V2-**T2**-16, V2-**T2**-27, V2-**T2**-38, V2-**T2**-46
V46D V2-**T2**-178, V2-**T2**-180, V2-**T2**-182, V2-**T2**-184
V48M. V2-**T2**-17–V2-**T2**-19, V2-**T2**-28–V2-**T2**-30, V2-**T2**-39–V2-**T2**-41, V2-**T2**-47–V2-**T2**-49, V2-**T2**-63, V2-**T2**-68, V2-**T2**-125, V2-**T2**-131
V60M. V2-**T2**-20–V2-**T2**-22, V2-**T2**-31–V2-**T2**-33

W

WBM V2-**T3**-128
WF V2-**T6**-47
WFD. V2-**T1**-106, V2-**T1**-108, V2-**T1**-109
WGD V2-**T1**-106, V2-**T1**-108
WJD. V2-**T1**-106, V2-**T1**-108
WKD V2-**T1**-107, V2-**T1**-108, V2-**T1**-109
WLD. V2-**T1**-107, V2-**T1**-108
WLG. V2-**T1**-109
WMB V2-**T2**-191
WND V2-**T1**-107, V2-**T1**-108, V2-**T1**-109
WS. V2-**T2**-191
WSM V2-**T3**-129

X

XCTX V2-**T3**-35, V2-**T3**-47
XFD V2-**T1**-106, V2-**T1**-108
XJD V2-**T1**-106, V2-**T1**-108
XKD V2-**T1**-107, V2-**T1**-108, V2-**T1**-109
XLD V2-**T1**-108
XMC. V2-**T1**-107, V2-**T1**-108
XND V2-**T1**-107, V2-**T1**-108
XP V2-**T1**-111
X48M. V2-**T2**-73–V2-**T2**-88

Y

YSC9 . . . . . V2-**T3**-37, V2-**T3**-49
YS2 . . . . . V2-**T3**-6, V2-**T3**-29, V2-**T3**-33, V2-**T3**-41, V2-**T3**-45, V2-**T3**-61, V2-**T3**-65
Y24G V2-**T2**-100
Y24M. V2-**T2**-100
Y38G V2-**T2**-100, V2-**T2**-101
Y38M. V2-**T2**-100, V2-**T2**-101
Y43G V2-**T2**-102
Y43M. V2-**T2**-102
Y44G V2-**T2**-102
Y44M. V2-**T2**-102
Y48D V2-**T2**-102–V2-**T2**-105
Y48G V2-**T2**-102–V2-**T2**-104, V2-**T2**-105
Y48J. V2-**T2**-102, V2-**T2**-103, V2-**T2**-105

Y48M. V2-**T2**-102–V2-**T2**-105
Y60G V2-**T2**-105
Y60M. V2-**T2**-105

Z

Z48G V2-**T2**-128
Z48N V2-**T2**-128

Numerics

1226. . . . . V2-**T1**-95
177C V2-**T1**-95
178C V2-**T1**-14, V2-**T1**-92
2607. . . . . V2-**T1**-95, V2-**T1**-96
313C V2-**T1**-95, V2-**T1**-96
315C V2-**T1**-96
371D V2-**T1**-95, V2-**T1**-96
503C V2-**T1**-96
504C V2-**T1**-96
624B V2-**T1**-92
657D V2-**T1**-95, V2-**T1**-96
673B V2-**T1**-92

A

Accessories
- 100A Busway . . . V2-**T6**-47
  - C Clamp Hanger . . . V2-**T6**-47
  - Edgewise Hanger . . . V2-**T6**-47
  - End Closer . . . V2-**T6**-47
  - Outlet Cover . . . V2-**T6**-47
  - Slip-On Wall Flange . . . V2-**T6**-47
- Instant Service Switchboards
  - Circuit Breakers . . . V2-**T4**-19
  - Meter Compartment Doors . . . V2-**T4**-19
  - Meter Sockets . . . V2-**T4**-19
  - Special Options . . . V2-**T4**-19
- Pow-R-Line C Panelboards . . . V2-**T3**-57
  - Box Collar Kits . . . V2-**T3**-57
  - Branch Breakers—P2R . . . V2-**T3**-57
  - Branch Circuit Breakers—P1R . . . V2-**T3**-57
  - Copper Main Bus Adder . . . V2-**T3**-57
  - Copper Terminal Ground Bar . . . V2-**T3**-57
  - Depth Adder Kits . . . V2-**T3**-57
  - Insulated/Isolated Ground Bus . . . V2-**T3**-57
  - Neutral Kit . . . V2-**T3**-57
- Switching Devices, Enclosed Circuit Breakers
  - Alarm Switch . . . V2-**T1**-110
  - Auxiliary Switch . . . V2-**T1**-110
  - Breather and Drain, Hazardous Enclosures . . . V2-**T1**-111
  - Electronic Trip Options . . . V2-**T1**-110
  - Key Interlock Systems . . . V2-**T1**-110
  - Nameplates . . . V2-**T1**-110
  - Neutral Assemblies Installed . . . V2-**T1**-110
  - Neutral Kits, Insulated and Groundable . . . V2-**T1**-111
  - Pilot Light On NEMA 1 Enclosure . . . V2-**T1**-110
  - Raintight Hubs . . . V2-**T1**-111
  - Separate Ground Lug Installed . . . V2-**T1**-110
  - Shunt Trip . . . V2-**T1**-110
  - Special Paint Finish . . . V2-**T1**-110
  - Special RD Modifications and Accessories . . . V2-**T1**-111
  - Stainless Steel Flush Covers . . . V2-**T1**-110
  - Undervoltage Release Mechanism . . . V2-**T1**-110
- Switching Devices, Safety Switches
  - Auxiliary Contact Kits . . . V2-**T1**-14
  - Control Pole Kit . . . V2-**T1**-14
  - Copper Lug Kits . . . V2-**T1**-14
  - Crimp Lug Pad Kit . . . V2-**T1**-14
  - Flex Center Modifications . . . V2-**T1**-16
  - Fuse Puller Kits . . . V2-**T1**-14
  - Ground Lug Kits . . . V2-**T1**-14
  - J Fuse Adapter Kits . . . V2-**T1**-14
  - Myers Type Hubs . . . V2-**T1**-15
  - Neutral Kits/Ground Kits . . . V2-**T1**-14
  - R Fuse Adapter Kits . . . V2-**T1**-14
  - Switching Neutral Bonding Kits . . . V2-**T1**-14
  - T Fuse Adapter Kits . . . V2-**T1**-14
- Switching Devices, Safety Switches, Flange Mounted—Fixed Depth
  - Electrical Interlocks . . . V2-**T1**-103
- Switching Devices, Safety Switches, Flange Mounted—Variable Depth
  - Interlocks and Connecting Rod . . . V2-**T1**-100
  - Safety Door Hardware . . . V2-**T1**-100
- Transformers . . . V2-**T2**-191–V2-**T2**-193
  - Case Parts for Ventilated Units . . . V2-**T2**-193
  - Replacement Parts for Mini–Power Centers . . . V2-**T2**-192
  - Rodent Screens . . . V2-**T2**-192
  - Terminal Extension Kit . . . V2-**T2**-191
  - Terminal Lug Kits . . . V2-**T2**-192
  - Wall-Mounting Bracket . . . V2-**T2**-191
  - Weathershield Kit . . . V2-**T2**-191

Accessories and Modifications
- PRL4D . . . V2-**T3**-83

Alarm Switch
- Switching Devices, Enclosed Circuit Breakers
  - Accessories . . . V2-**T1**-110

Ambient Compensating Breakers
- Pow-R-Line Drawout Molded Case Circuit Breaker Switchboards . . . V2-**T4**-12

ATC Controllers, Transfer Switches
- ATC-100 Controller . . . V2-**T5**-70
- ATC-300+ Controller . . . V2-**T5**-72
- ATC-900 Controller . . . V2-**T5**-76

ATC-100 Controller
- Transfer Switches . . . V2-**T5**-70

ATC-300+ Controller
- Transfer Switches . . . V2-**T5**-72

ATC-900 Controller . . . V2-**T5**-76
- Transfer Switches . . . V2-**T5**-76

Automatic Closed Transition
- Contactor-Based Designs
  - Transfer Switches . . . V2-**T5**-13

Automatic Open Transition
- Contactor-Based Designs
  - Transfer Switches . . . V2-**T5**-8
- Service Entrance Rated Contactor
  - Transfer Switches . . . V2-**T5**-27

Automatic Transfer Controllers
- Transfer Switches . . . V2-**T5**-66–V2-**T5**-91

Auxiliary Contact Kits
- Switching Devices, Safety Switches
  - Accessories . . . V2-**T1**-14

Auxiliary Power Heavy-Duty Safety Switch
- Safety Switches
  - Switching Devices . . . V2-**T1**-83

Auxiliary Switch
- Switching Devices, Enclosed Circuit Breakers
  - Accessories . . . V2-**T1**-110

B

Box Collar Kits
- Pow-R-Line C Panelboards . . . V2-**T3**-57

Branch Breakers—P2R
- Pow-R-Line C Panelboards . . . V2-**T3**-57

Branch Circuit Breakers—P1R
- Pow-R-Line C Panelboards . . . V2-**T3**-57

Breaker-Based Designs
- Transfer Switches
  - Maintenance Bypass Switches . . . V2-**T5**-48

Molded Case Switches—Automatic Wallmount . . . V2-**T5**-42
Molded Case Switches—Manual Wallmount. V2-**T5**-35
Molded Case Switches—Non-Automatic Wallmount V2-**T5**-39

Breather and Drain, Hazardous Enclosures
Switching Devices, Enclosed Circuit Breakers
Accessories V2-**T1**-111

Buck-Boost and Low Voltage Lighting Transformers
Distribution Transformers V2-**T2**-144

Busway Products
100A Busway V2-**T6**-46–V2-**T6**-48
Low Voltage Busway V2-**T6**-1–V2-**T6**-48
Pow-R-Flex V2-**T6**-28–V2-**T6**-45
Pow-R-Way III V2-**T6**-2–V2-**T6**-27

Bypass Isolation Transfer Switches
Contactor-Based Designs V2-**T5**-22
Magnum-Based Designs. V2-**T5**-60

C

C Clamp Hanger
100A Busway
Accessories V2-**T6**-47

Case Parts for Ventilated Units
Transformers. V2-**T2**-193

Circuit Breakers
Instant Service Switchboards V2-**T4**-19

Class I, Division 2, Groups C and D Transformers
Distribution Transformers V2-**T2**-127

Commercial Metering Switchboards
Group-Mounted Switchboards V2-**T4**-3

Compartmentalized Switchboards V2-**T4**-14–V2-**T4**-15

Compression Main Lugs
Pow-R-Line Drawout Molded Case Circuit Breaker
Switchboards V2-**T4**-12

Contactor-Based Designs
Transfer Switches V2-**T5**-8–V2-**T5**-34
Automatic Closed Transition V2-**T5**-13
Automatic Open Transition. V2-**T5**-8
Bypass Isolation V2-**T5**-17, V2-**T5**-22

Control Pole Kit
Switching Devices, Safety Switches
Accessories V2-**T1**-14

Copper Lug Kits
Switching Devices, Safety Switches
Accessories V2-**T1**-14

Copper Lugs/Terminals
Pow-R-Line Drawout Molded Case Circuit Breaker
Switchboards V2-**T4**-12

Copper Main Bus Adder
Pow-R-Line C Panelboards V2-**T3**-57

Copper Main Busbars
Pow-R-Line Drawout Molded Case Circuit Breaker
Switchboards V2-**T4**-12

Copper Terminal Ground Bar
Pow-R-Line C Panelboards V2-**T3**-57

Crimp Lug Pad Kit
Switching Devices, Safety Switches
Accessories. V2-**T1**-14

D

Density Rated Bus
Pow-R-Line Drawout Molded Case Circuit
Breaker Switchboards. V2-**T4**-12

Depth Adder Kits
Pow-R-Line C Panelboards V2-**T3**-57

Distribution Transformers V2-**T2**-110–V2-**T2**-184
Buck-Boost and Low Voltage Lighting Transformers V2-**T2**-144
Class I, Division 2, Groups C and D Transformers. . . V2-**T2**-127
Marine Duty Transformers. V2-**T2**-133
Medium Voltage V2-**T2**-173
Mini–Power Centers V2-**T2**-119
Motor Drive Isolation Transformers. V2-**T2**-111
Open-Type Core and Coil Assembly Transformers . . V2-**T2**-130
Totally Enclosed Non-Ventilated Transformers V2-**T2**-124

Double-Throw Switches
Safety Switches
Switching Devices V2-**T1**-45

Drawout NX Internal
Pow-R-Line Drawout Molded Case Circuit
Breaker Switchboards. V2-**T4**-12

E

E3 Super Efficient Transformers V2-**T2**-66

Eaton Terms & Conditions. V2-**T1**-1
Freight V2-**T1**-3
Limitation of Liability V2-**T1**-5
Terms and Conditions of Sale V2-**T1**-1
Terms of Payment V2-**T1**-2
Warranty V2-**T1**-3

Edgewise Hanger
100A Busway
Accessories. V2-**T6**-47

Electrical Interlocks
Switching Devices, Safety Switches
Accessories. V2-**T1**-103

Electronic Trip Options
Switching Devices, Enclosed Circuit Breakers
Accessories. V2-**T1**-110

Electronic Trip Units
Pow-R-Line Drawout Molded Case Circuit Breaker
Switchboards V2-**T4**-12

Elevator Control Panelboard
Panelboards V2-**T3**-96, V2-**T3**-97

Elevator Control Switch
Safety Switches
Switching Devices V2-**T1**-81

Enclosed Circuit Breakers
Switching Devices V2-**T1**-104

Enclosed Rotary Disconnects
Switching Devices V2-**T1**-122

End Closer
100A Busway
Accessories V2-**T6**-47

Energy-Efficient Harmonic Mitigating
Transformers V2-**T2**-71–V2-**T2**-92

EnviroLine—Non-Metallic KRYDON Switch
Safety Switches
Switching Devices V2-**T1**-61

EnviroLine—Receptacle Switches
Safety Switches
Switching Devices V2-**T1**-59

EnviroLine—Stainless Steel Switch
Safety Switches
Switching Devices V2-**T1**-53

EnviroLine—Upper and Lower Window Switches
Safety Switches
Switching Devices V2-**T1**-56

EZ Box and EZ Trim
Panelboards V2-**T3**-4–V2-**T3**-6

F

Flange Mounted—Fixed Depth
Safety Switches
Switching Devices V2-**T1**-102

Flange Mounted—Variable Depth
Safety Switches
Switching Devices V2-**T1**-98

Flex Center Modifications
Switching Devices, Safety Switches
Accessories V2-**T1**-16

Fuse Puller Kits
Switching Devices, Safety Switches
Accessories V2-**T1**-14

G

General Duty
Safety Switches
Switching Devices V2-**T1**-26

General-Purpose Encapsulated Transformers . . V2-**T2**-93–V2-**T2**-109

Ground Bus
Pow-R-Line Drawout Molded Case Circuit Breaker
Switchboards V2-**T4**-13

Ground Fault Protection
Pow-R-Line Drawout Molded Case Circuit Breaker
Switchboards V2-**T4**-13

Ground Lug Kits
Switching Devices, Safety Switches
Accessories V2-**T1**-14

Group-Mounted Switchboards V2-**T4**-2–V2-**T4**-5
Commercial Metering Switchboards V2-**T4**-3
Pow-R-Line Distribution Switchboards V2-**T4**-2

H

Heavy-Duty
Safety Switches
Switching Devices V2-**T1**-31

Heavy-Duty Fusible Safety Switches Accepting Cube Fuses
Safety Switches
Switching Devices V2-**T1**-78

I

Infrared (IR) Viewing Windows
Pow-R-Line Drawout Molded Case Circuit Breaker
Switchboards V2-**T4**-13

Instant Service Switchboards V2-**T4**-16–V2-**T4**-20

Insulated/Isolated Ground Bus
Pow-R-Line C Panelboards V2-**T3**-57

Integrated Facility Switchboards V2-**T4**-6–V2-**T4**-7

Interlocks and Connecting Rod
Switching Devices, Safety Switches
Accessories. V2-**T1**-100

J

J Fuse Adapter Kits
Switching Devices, Safety Switches
Accessories. V2-**T1**-14

JG and LG Breaker Accessories
Pow-R-Line Drawout Molded Case Circuit Breaker
Switchboards V2-**T4**-12

K

Key Interlock Systems
Switching Devices, Enclosed Circuit Breakers
Accessories. V2-**T1**-110

K-Factor
NEMA TP-1 Energy-Efficient Transformers V2-**T2**-51

L

Left-Handed Safety Switch
Safety Switches
Switching Devices V2-**T1**-86

Low Voltage Busway
100A Busway V2-**T6**-46–V2-**T6**-48
Busway Products. V2-**T6**-1–V2-**T6**-48
Pow-R-Flex V2-**T6**-28–V2-**T6**-45
Pow-R-Way III V2-**T6**-2–V2-**T6**-27

M

Magnum-Based Designs
Bypass Isolation Transfer Switches. V2-**T5**-60
Power Case Switch—Floor Standing 200–5000 A . . . V2-**T5**-51
Transfer Switches V2-**T5**-51–V2-**T5**-65

Maintenance Bypass Switches
Transfer Switches
Breaker-Based Designs. V2-**T5**-48

Marine Duty Transformer
Distribution Transformers V2-**T2**-133

Medium Voltage Distribution Transformers. V2-**T2**-173

Meter Compartment Doors
Instant Service Switchboards V2-**T4**-19

Meter Sockets
Instant Service Switchboards V2-**T4**-19

Metering Service Sections
Panelboards. V2-**T3**-127–V2-**T3**-129

Mill-Duty Rated, Heavy-Duty, Fusible, Non-Fusible, Single-Throw Safety Switches
Switching Devices V2-**T1**-76

Mini–Power Centers
Distribution Transformers V2-**T2**-119

Modifications
Panelboards. V2-**T3**-98
PRL5P V2-**T3**-92

Molded Case Switches—Automatic Wallmount Breaker-Based Designs
Transfer Switches V2-**T5**-42

Molded Case Switches—Manual Wallmount Breaker-Based Designs
Transfer Switches V2-**T5**-35

Molded Case Switches—Non-Automatic Wallmount Breaker-Based Designs
Transfer Switches V2-**T5**-39

Motor Drive Isolation Transformers
Distribution Transformers V2-**T2**-111

Multipoint Meter (MPM)
Switchboards V2-**T4**-36–V2-**T4**-39
Pow-R-Line Multipoint Meter V2-**T4**-37

Multipoint Submetering Switchboards
PRC7500—Tenant Metering V2-**T4**-38

Myers Type Hubs
Switching Devices, Safety Switches
Accessories V2-**T1**-15

N

Nameplates
Switching Devices, Enclosed Circuit Breakers
Accessories V2-**T1**-110

Nameplates, Engraved
Pow-R-Line Drawout Molded Case Circuit Breaker Switchboards V2-**T4**-13

NEMA 7/9—Hazardous Location Disconnect Switch Safety Switches
Switching Devices V2-**T1**-66

NEMA Premium Efficient Transformers V2-**T2**-61

NEMA TP-1 Energy-Efficient Transformers. V2-**T2**-2–V2-**T2**-60
K-Factor V2-**T2**-51

Neutral Assemblies Installed
Switching Devices, Enclosed Circuit Breakers
Accessories V2-**T1**-110

Neutral Kit
Pow-R-Line C Panelboards V2-**T3**-57

Neutral Kits, Insulated and Groundable
Switching Devices, Enclosed Circuit Breakers
Accessories V2-**T1**-111

Neutral Kits/Ground Kits
Switching Devices, Safety Switches
Accessories. V2-**T1**-14

O

Open-Type Core and Coil Assembly Transformers
Distribution Transformers V2-**T2**-130

Options, Accessories and Modifications
Pow-R-Line Drawout Molded Case Circuit Breaker Switchboards
Ambient Compensating Breakers V2-**T4**-12
Compression Main Lugs V2-**T4**-12
Copper Lugs/Terminals V2-**T4**-12
Copper Main Busbars V2-**T4**-12
Density Rated Bus V2-**T4**-12
Drawout NX Internal V2-**T4**-12
Electronic Trip Units V2-**T4**-12
Ground Bus V2-**T4**-13
Ground Fault Protection V2-**T4**-13
Infrared (IR) Viewing Windows V2-**T4**-13
JG and LG Breaker Accessories V2-**T4**-12
Nameplates, Engraved V2-**T4**-13
Seismically Qualified V2-**T4**-13
Service Entrance Equipment. V2-**T4**-13
Surge Protective Devices (SPD) V2-**T4**-13
Touchup Paint V2-**T4**-13

Outlet Cover
100A Busway
Accessories. V2-**T6**-47

P

Panelboards V2-**T3**-1–V2-**T3**-132
Customer Manufacturing Solution Centers V2-**T3**-131
Elevator Control Panelboard V2-**T3**-96, V2-**T3**-97
EZ Box and EZ Trim V2-**T3**-4–V2-**T3**-6
Metering Service Sections. V2-**T3**-127–V2-**T3**-129
Modifications V2-**T3**-98
Pow-R-Command. V2-**T3**-107–V2-**T3**-126
Pow-R-Line C Panelboards V2-**T3**-7–V2-**T3**-95
Pow-R-Stock Plus Program V2-**T3**-130

Pilot Light On NEMA 1 Enclosure
Switching Devices, Enclosed Circuit Breakers
Accessories. V2-**T1**-110

Power Case Switch—Floor Standing 200–5000 A. V2-**T5**-51

Pow-R-Command
Panelboards V2-**T3**-107–V2-**T3**-126

Pow-R-Flex
Low Voltage Busway. V2-**T6**-28–V2-**T6**-45

Pow-R-Line C Panelboards V2-**T3**-7–V2-**T3**-95
Accessories V2-**T3**-57
Retrofit Panelboard V2-**T3**-50
Type PRL1a V2-**T3**-26
Type PRL1aF V2-**T3**-30
Type PRL1a-LX V2-**T3**-34
Type PRL2a V2-**T3**-38
Type PRL2aF V2-**T3**-42
Type PRL2a-LX V2-**T3**-46
Type PRL3a V2-**T3**-58

Type PRL3E V2-**T3**-62
Type PRL4. . . . . V2-**T3**-66
Type PRL4D V2-**T3**-76
Type PRL5P V2-**T3**-88

Pow-R-Line Distribution Switchboards
Group-Mounted Switchboards V2-**T4**-2

Pow-R-Line Drawout Molded Case Circuit Breaker
Switchboards V2-**T4**-8–V2-**T4**-13

Pow-R-Line Multipoint Meter
Multipoint Meter (MPM)
Switchboards V2-**T4**-37

Pow-R-Stock Plus Program
Panelboards V2-**T3**-130

Pow-R-Way III
Low Voltage Busway V2-**T6**-2–V2-**T6**-27

PRC7500—Tenant Metering
Multipoint Submetering
Switchboards V2-**T4**-38

Pringle Bolted Pressure Switch
Safety Switches
Switching Devices V2-**T1**-88

PRL4D
Accessories and Modifications V2-**T3**-83

PRL5P
Modifications V2-**T3**-92

Q

Quick Connect Switches
Safety Switches
Switching Devices V2-**T1**-68

R

R Fuse Adapter Kits
Switching Devices, Safety Switches
Accessories V2-**T1**-14

Raintight Hubs
Switching Devices, Enclosed Circuit Breakers
Accessories V2-**T1**-111

Remote Annunciator Controller
Transfer Switches V2-**T5**-118–V2-**T5**-120

Replacement Parts for Mini–Power Centers
Transformers. V2-**T2**-192

Retrofit Panelboard
Pow-R-Line C Panelboards V2-**T3**-50

Rodent Screens
Transformers. V2-**T2**-192

Roll-Up Generator Termination Box
Switchboards V2-**T4**-21–V2-**T4**-35

S

Safety Door Hardware
Switching Devices, Safety Switches
Accessories V2-**T1**-100

Safety Switches, Switching Devices
200% Neutral Safety Switches. V2-**T1**-87
316-Grade Stainless Steel Safety Switches V2-**T1**-72
Auxiliary Power Heavy-Duty Safety Switch V2-**T1**-83
Double-Throw Switches V2-**T1**-45
Elevator Control Switch V2-**T1**-81
EnviroLine—Non-Metallic KRYDON Switch V2-**T1**-61
EnviroLine—Receptacle Switches. V2-**T1**-59
EnviroLine—Stainless Steel Switch. V2-**T1**-53
EnviroLine—Upper and Lower Window Switches . . . V2-**T1**-56
Flange Mounted—Fixed Depth V2-**T1**-102
Flange Mounted—Variable Depth V2-**T1**-98
General Duty V2-**T1**-26
Heavy Duty V2-**T1**-31
Heavy-Duty Fusible Safety Switches Accepting
Cube Fuses. V2-**T1**-78
Left-Handed Safety Switch V2-**T1**-86
Mill-Duty Rated, Heavy-Duty, Fusible, Non-Fusible,
Single-Throw. V2-**T1**-76
NEMA 7/9—Hazardous Location Disconnect Switch . V2-**T1**-66
Pringle Bolted Pressure Switch. V2-**T1**-88
Quick Connect Switches V2-**T1**-68
Shunt Trip Safety Switch. V2-**T1**-63
Six-Pole Switches V2-**T1**-43
Solar Disconnect Switch V2-**T1**-70
Type DS, Fusible and Non-Fusible. V2-**T1**-91
Type Visi-Flex DE-ION V2-**T1**-94

Seismically Qualified
Pow-R-Line Drawout Molded Case Circuit Breaker
Switchboards V2-**T4**-13

Separate Ground Lug Installed
Switching Devices, Enclosed Circuit Breakers
Accessories. V2-**T1**-110

Service Entrance Equipment
Pow-R-Line Drawout Molded Case Circuit Breaker
Switchboards V2-**T4**-13

Service Entrance Rated Contactor
Transfer Switches
Automatic Open Transition V2-**T5**-27

Shunt Trip
Switching Devices, Enclosed Circuit Breakers
Accessories. V2-**T1**-110

Shunt Trip Safety Switch
Safety Switches
Switching Devices V2-**T1**-63

Six-Pole Switches
Safety Switches
Switching Devices V2-**T1**-43

Slip-On Wall Flange
100A Busway
Accessories. V2-**T6**-47

Solar Disconnect Switch
Safety Switches
Switching Devices V2-**T1**-70

Special Options
Instant Service Switchboards V2-**T4**-19

Special Paint Finish
Switching Devices, Enclosed Circuit Breakers
Accessories. V2-**T1**-110

Special RD Modifications and Accessories
Switching Devices, Enclosed Circuit Breakers
Accessories V2-**T1**-110

Stainless Steel Flush Covers
Switching Devices, Enclosed Circuit Breakers
Accessories V2-**T1**-110

Standard and Optional Features
Transfer Switches V2-**T5**-92–V2-**T5**-117

Surge Protective Devices (SPD)
Pow-R-Line Drawout Molded Case Circuit Breaker
Switchboards V2-**T4**-13

Switchboards V2-**T4**-1–V2-**T4**-39
Compartmentalized Switchboards V2-**T4**-14–V2-**T4**-15
Group-Mounted Switchboards V2-**T4**-2–V2-**T4**-5
Instant Service Switchboards V2-**T4**-16–V2-**T4**-20
Integrated Facility Switchboards V2-**T4**-6–V2-**T4**-7
Multipoint Meter (MPM) V2-**T4**-36–V2-**T4**-39
Pow-R-Line Drawout Molded Case Circuit Breaker
Switchboards V2-**T4**-8–V2-**T4**-13
Roll-Up Generator Termination Box V2-**T4**-21–V2-**T4**-35

Switching Devices. V2-**T1**-1–V2-**T1**-128
Enclosed Circuit Breakers V2-**T1**-104–V2-**T1**-121
Enclosed Rotary Disconnects V2-**T1**-122–V2-**T1**-128
Safety Switches V2-**T1**-2–V2-**T1**-103

Switching Neutral Bonding Kits
Switching Devices, Safety Switches
Accessories V2-**T1**-14

T

T Fuse Adapter Kits
Switching Devices, Safety Switches
Accessories V2-**T1**-14

Terminal Extension Kit
Transformers. V2-**T2**-191

Terminal Lug Kits for Type DT-3
Transformers. V2-**T2**-192

Totally Enclosed Non-Ventilated Transformers
Distribution Transformers V2-**T2**-124

Touchup Paint
Pow-R-Line Drawout Molded Case Circuit Breaker
Switchboards V2-**T4**-13

Transfer Switch Equipment. V2-**T5**-2–V2-**T5**-7

Transfer Switches V2-**T5**-1–V2-**T5**-121
Automatic Transfer Controllers V2-**T5**-66–V2-**T5**-91
Breaker-Based Designs. V2-**T5**-48
Contactor-Based Designs V2-**T5**-8–V2-**T5**-34
Magnum-Based Designs. V2-**T5**-51–V2-**T5**-65
Remote Annunciator Controller. V2-**T5**-118–V2-**T5**-120
Standard and Optional Features V2-**T5**-92–V2-**T5**-117

Transformers. V2-**T2**-1–V2-**T2**-222
Accessories. V2-**T2**-191–V2-**T2**-193
Distribution Transformers V2-**T2**-110–V2-**T2**-184
E3 Super Efficient Transformers. V2-**T2**-66
Energy-Efficient Harmonic Mitigating
Transformers V2-**T2**-71–V2-**T2**-92
General-Purpose Encapsulated
Transformers V2-**T2**-93–V2-**T2**-109
NEMA Premium Efficient Transformers V2-**T2**-61
NEMA TP-1 Energy-Efficient Transformers . . V2-**T2**-2–V2-**T2**-60
K-Factor. V2-**T2**-51

Type DS, Fusible and Non-Fusible
Safety Switches
Switching Devices V2-**T1**-91

Type PRL1a
Pow-R-Line C Panelboards V2-**T3**-26

Type PRL1aF
Pow-R-Line C Panelboards V2-**T3**-30

Type PRL1a-LX
Pow-R-Line C Panelboards V2-**T3**-34

Type PRL2a
Pow-R-Line C Panelboards V2-**T3**-38

Type PRL2aF
Pow-R-Line C Panelboards V2-**T3**-42

Type PRL2a-LX
Pow-R-Line C Panelboards V2-**T3**-46

Type PRL3a
Pow-R-Line C Panelboards V2-**T3**-58

Type PRL3E
Pow-R-Line C Panelboards V2-**T3**-62

Type PRL4
Pow-R-Line C Panelboards V2-**T3**-66

Type PRL4D
Pow-R-Line C Panelboards V2-**T3**-76

Type PRL5P
Pow-R-Line C Panelboards V2-**T3**-86, V2-**T3**-88

Type Visi-Flex DE-ION
Safety Switches
Switching Devices V2-**T1**-94

U

Undervoltage Release Mechanism
Switching Devices, Enclosed Circuit Breakers
Accessories. V2-**T1**-110

W

Wall-Mounting Bracket
Transformers V2-**T2**-191

Weathershield Kit
Transformers V2-**T2**-191

Numerics

100A Busway
Accessories V2-**T6**-47
Low Voltage Busway. V2-**T6**-46–V2-**T6**-48

200% Neutral Safety Switches
Safety Switches
Switching Devices V2-**T1**-87

316-Grade Stainless Steel Safety Switches
Safety Switches
Switching Devices V2-**T1**-72